SIEMENS

HVAC products and building automation systems

Product Catalog 2013

Answers for infrastructure.

Content

1	**Standard controllers**	– Immersion- / duct temperature controller – Controller for solar plants – Heating- District heating controller – Room units – Boiler sequence controller – Extension modules and operator units	– Universal controller – Heat pump controller – Switching and monitoring device – Line couplers and current valves – Signal converter, setpoint adjuster – Display, time switch – Transformers – KNX – system components
2	**Software and central communication units**	– Operating service and alarm software – Central communication units for Synco (KNX), Sigmagyr (LPB	
3	**Room automation**	– Communicative controllers – RXL (Bus), RXB (KNX), RXC (LON) – Communicative central control unit (KNX) – Room units	
4	**Home Automation System Synco living**	– Individual room control (H/K) – Consumption data interface – Comfort ventilation	– Security function – Control of lights and blinds
5	**Thermostats**	– Heating and cooling systems – Fan coils – Variable air volume system – Heat pump system	– Capillary and clamp-on thermostats – Coil probe thermostats – Hygrostats – Condensation monitor
6	**Sensors**	– Temperature sensor – Humidity- and temperature sensor – Pressure sensor	– Flow sensor – Air quality sensor
7	**Valves and actuators**	– Globe and pressure independent – Combi valves and -actuator – Butterfly- and slipper valves – Ball valves – Valves and actuator for terminal units	– Chilled ceilings and zones – Radiator valves and actuator – Magnetic control valve for refrigerants – Control valve for brine and hot water – Pilot valve
8	**Damper actuators**	– Rotary damper actuators – Linear damper actuators – VAV compact controllers with KNX/PL-Link communication – Actuators for fire and smoke protection dampers	
9	**Variable speed drives**	– Variable speed drive for pumps and fan motors	
10	**Metering**	– Electronic heat cost allocators – Mechanical and electronic water meters – Impeller type heating and/or cooling energy meters – Ultrasonic heating and/or cooling energy meters – Systems for remote readout M-Bus, Synergyr	

Read the QR code with the QR code reader in your mobile!

Heading for the mountain top with energy under control

Control and monitor your home automation while on the move using the energy indicator and the HomeControl-App.

Higher energy efficiency and more comfort in rooms

Dear customers and business partners

Energy efficiency is one of the key topics now widely discussed in business, politics and society. A number of countries in Europe have already decided to shut down their nuclear power plants over the next few years. In other countries, the energy turnaround forms an integral part of their political agenda. However, the transition to renewable forms of energy alone will not protect the global climate. If productivity and the quality of life shall be maintained or even improved, our resources will have to be used more efficiently – a mandatory requirement.

Stephan Bauer
CEO Building Technologies
Control Products & Systems

For a number of years, Siemens has pushed and promoted the protection of the environment and the efficient use of energy in rooms and buildings, based on innovative and environment-friendly technologies. All products and systems marketed by our company are designed to create ideal climatic room conditions while ensuring optimum energy usage. Such a product is the new variable speed drive G120P, for example, used for the control of air flow or liquid media. Thanks to leading edge technology, the drive offers energy savings of up to 60%.

To ensure quality and first-class control performance, all applications are tested and optimized in Siemens' own 800-square meter HVAC laboratory. These applications link HVAC building technology from the cellar to the individual rooms on the different floors, providing for optimum coordination of the entire system. Using the energy indicator, energy usage is monitored and unfavorable settings from an energy efficiency point of view are indicated by a red leaf symbol on the room operating unit. The HomeControl app enables room users to access the HVAC plant while on the move and to check the settings or to readjust the room temperature, for example.

To make certain you will find the right product quickly and easily from our extensive portfolio, Siemens provides ideal support in the form of tools and new apps for smartphones and tablet PCs. Also, all brochures can now be downloaded at any time.

Take advantage of our wide range of innovative products, systems, and tested applications for improving energy efficiency in buildings and protecting the environment.

Stephan Bauer
CEO Building Technologies Control Products & Systems

BACS efficiency classes – EN 15232

High energy performance
BACS and TBM

Advanced
BACS and TBM

Standard
BACS

Non-energy-efficient
BACS

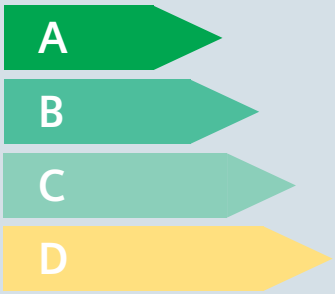

BACS Building Automation and Control System
TBM Technical Building Management System

Building automation and control – impact on energy efficiency

About 40% of the world's energy is consumed by buildings. Worldwide, buildings also account for 21% of the greenhouse gas emissions. Building owners now face growing pressure globally to reduce energy consumption and minimize impact that such consumption has on the environment.

Energy savings of up to 30% thanks to intelligent building automation and control

Siemens as a leading company and specialist for energy efficiency of buildings offers a comprehensive portfolio of products, systems and solutions for increased energy efficiency. The key is intelligent and integrated building and room automation solutions that lead to significant and measurable energy savings without loss of comfort, thus generating cost savings. When installing an optimized building automation and control system, the energy efficiency of heating, ventilation and air conditioning plants in commercial buildings, for instance, can be increased by up to 30%.

This corresponds to energy performance class A according to the European standard EN 15232,"Energy performance of buildings", which defines the standard for the effectiveness of building automation and control systems. It distinguishes between four energy performance classes (A through D) in building automation and control. The systems supplied by Siemens deliver important prerequisites needed to attain energy performance class A. The flexible and energy-efficient systems provide all important building functions from lighting to shading and from heating and ventilation to air conditioning plants. The constant logging of energy consumption data enable building owners and facility managers to find potential saving opportunities and to check the success of the measures taken so far.

eu.bac Cert

Significant energy savings thanks to eu.bac-certified room controllers

The installation of demand-based electronic individual room control in connection with radiator heating systems, fan coil units or chilled ceilings represents a considerable savings potential. Thanks to their high control accuracy, the Desigo RX individual room controllers, for example, are certified by the European Building Automation and Controls Association (eu.bac). Excellent control accuracy optimizes the room climate and enhances comfort. A difference in set point of only 1 °C results in energy savings of up to 6%. This means that the energy savings achieved by individual room controllers are 8% higher than those reached by "lowest in class" eu.bac-certified controllers.

For more information, visit www.siemens.com/energyeffiency

	Saving potential (thermal)					
	D-A	D-B	D-C	C-A	C-B	B-A
Offices	54%	47%	34%	30%	20%	13%
Lecture halls	60%	40%	19%	50%	25%	33%
Educational buildings (schools)	33%	27%	17%	20%	12%	9%
Hospitals	34%	31%	24%	14%	9%	5%
Hotels	48%	35%	24%	32%	15%	20%
Restaurants	45%	37%	19%	32%	23%	12%
Commercial and retail buildings	62%	53%	36%	40%	27%	18%
Residential Buildings	26%	20%	9%	19%	12%	8%

	Saving potential (electric)					
	D-A	D-B	D-C	C-A	C-B	B-A
Offices	21%	15%	9%	13%	7%	6%
Lecture halls	16%	11%	6%	11%	6%	5%
Educational buildings (schools)	20%	13%	7%	14%	7%	8%
Hospitals	9%	7%	5%	4%	2%	2%
Hotels	16%	11%	7%	10%	5%	5%
Restaurants	12%	8%	4%	8%	4%	4%
Commercial and retail buildings	16%	12%	7%	9%	5%	4%
Residential Buildings	15%	14%	7%	8%	7%	1%

Saving potential according to energy efficiency classes

Intelligent building technology

Building automation and control from Siemens comprises all components required for energy production, distribution and usage. This way, the systems ensure demand-dependent and efficient control of HVAC, lighting and shading plants for all types of buildings.

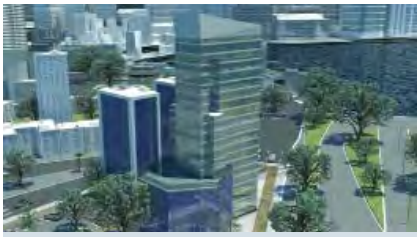

Efficiency for the entire building
Energy savings of up to 30% with the flexible Desigo building automation system or the simple Synco™ standard controller system.

Optimum room climate
Demand-controlled heating, cooling and ventilation for optimum climatic conditions in the rooms while minimizing energy usage – e.g. with the Desigo Total Room Automation system, the wide choice of versatile room thermostats, the Symaro™ sensors, and the RX room controllers with their excellent control accuracy.

Lighting
Through control of the lighting system, Desigo Total Room Automation or the Synco system saves significant amounts of energy with the application most frequently used.

Central monitoring and analyses of plant
Superposed monitoring of all process and energy consumption values, operation analyses and optimizations made easy with the Desigo Insight management station or the Synco central communication unit.

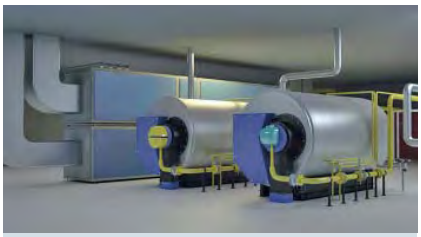

Energy-saving HVAC control
Demand-based control of the entire HVAC plant; range of HVAC controllers with energy saving functions for energy production combined with Acvatix™ valves and actuators, OpenAir™ damper actuators, plus G120P variable speed drives with tremendous energy saving potentials when it comes to energy distribution.

Shading
Intelligent control of shading systems depending on the sun's position, room temperature and daylight; calculation of the sun's position depending on local time, time zone and location of the building, glare-free lighting with maximum usage of daylight. Desigo Total Room Automation helps save significant amounts of energy.

For more detailed information about the system components marketed by Siemens, refer to the catalog covering the building automation and control systems, or visit www.siemens.com/buildingautomation

Can old buildings be just as energy-efficient as new ones?

Intelligent and energy-efficient building technologies from Siemens reduce emissions and costs, in any building.

Communicating HVAC control for the entire building

Synco supports the entire lifecycle of small to medium-size buildings. The controllers can be extended and adapted at any time, thanks to their modular design and backward-compatible communication. This way, investments can also be made in steps.

Synco offers matching solutions for all kinds of requirements: From simple temperature control to comprehensive control of HVAC plant, from the control of heat and cooling energy production to their distribution including individual room control. The product range offers both standalone and communicating controllers, which control and monitor plant via KNX communication. The communicating controllers exchange energy-related information, meaning that aggregates, such as heating boilers, chillers or pumps, are switched on only when required to maintain the required comfort level. This approach increases energy efficiency and helps attain energy performance class A as per EN 15232.

Thanks to Synco's easy-to-understand and efficient operation, the system excels in user and service friendliness. Pretested applications and energy saving functions are integrated. These save time and lower costs during the planning, engineering and commissioning phases. Owing to its modular design, the system can be easily extended via additional controllers, allowing Synco to be straightforwardly adapted when usage of the building changes.

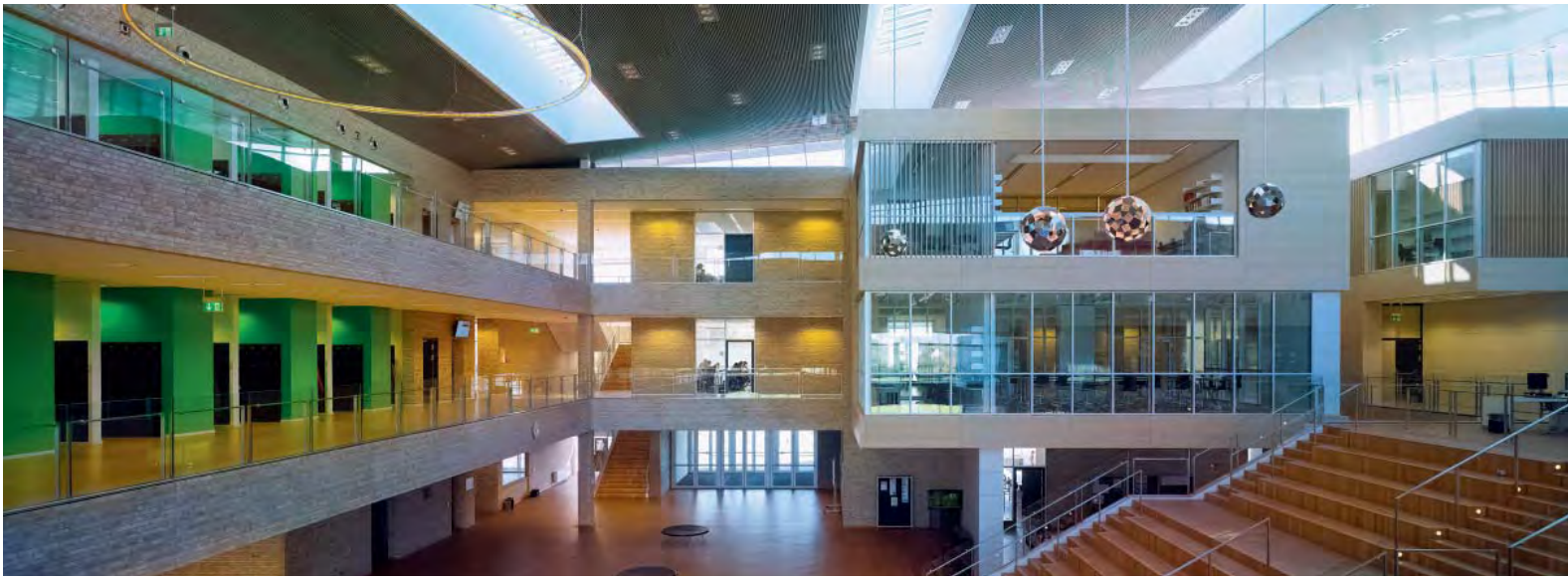

Room users and facility managers can considerably influence the consumption of energy, e.g. by shutting down the plant when not in use, or by matching room temperatures and scheduler programs to current occupancy times. The communicating room controllers RXB and RXL and communicating room thermostats RDG and RDF enable room users to straightforwardly adjust the comfort temperature in the individual rooms. The RDG and RDF room thermostats excel in elegant, modern design and innovative functions. The built-in scheduler programs help save additional energy.

What's more, Synco supports room users with its intelligent functions, such as the energy indicator. This facility monitors the settings made by the end-user, shows when limit values are crossed and – via e-mails or apps – sends the respective information to the occupants at regular intervals. A leaf symbol indicates the room's energy status depending on the settings made: Green means that the settings are correct from the point of view of energy efficiency, when the leaf symbol changes to orange, the settings are unfavorable. Hence, deviations are transparent and visible at any time.

Using a PC or smartphone, access via the Web or HomeControl apps enable users to check their settings from any location, any time.

For more detailed information, please visit: www.siemens.com/synco

Highlights

- Efficient installation thanks to flexibly applicable and modular HVAC controller range
- Energy efficiency thanks to energy saving functions and exchange of energy-related information via KNX
- Enhanced comfort owing to individual room climate
- Higher energy efficiency as a result of reminder function and reporting of energetically unfavorable conditions

Tools and Apps

The Siemens tools and apps support users not only when planning new projects, but also when calculating potential energy savings through modernization of the building automation and control system. Using the Siemens applications, the matching product can be easily found and the building's potential energy savings can be calculated, either online or via smartphone. This relieves you of routine work and saves time when it comes to finding the right products.

HIT – HVAC Integrated Tool

HIT supports energy performance standard EN 15232. The tool offers more than 300 preconfigured HVAC standard applications, classified according to potential energy savings. This allows users to select the application that best meets the requirements. The documents are linked to the applications and also show the prerequisites required to achieve the relevant energy performance class as per EN 15323.

EPC – Energy Performance Classification Tool

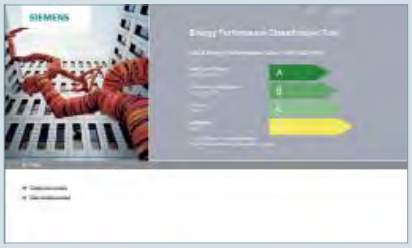

The EPC tool supports the user when determining the current state of an existing building automation and control system and then assigns it to one of the four energy performance classes A through D. When upgraded, the tool also determines the new state of the plant.

Other functions of the EPC tool are considerations regarding the profitability of modernization and fast production of customized documentation.

Siemens Building Technologies Download Center – iPhone App

In the download center, all brochures, instructions, specifications and data sheets produced by Siemens Building Technologies can be conveniently downloaded to your iPhone/iPad.

Old2New replacement guide for HVAC products – iPhone App

Old2New is a database containing a list of all former HVAC products produced by Landis+Gyr, Staefa Control System, and Landis & Staefa, together with pictures and detailed information about the successor products. This app supports you when selecting replacement products, also presenting the respective data sheets.

Combi valve sizer – iPhone App

With the combi valve sizer app from Siemens, it's easy to select a matching Acvatix combi valve and actuator. By entering the required maximum volumetric flow and other features, such as type of threaded connection or DN class, the ideal combi valve is recommended. The selection of actuator is just as easy. What's more, all data sheets are made available.

The app also works the other way: If you want to find the maximum volumetric flow resulting from a certain presetting, the calculation is made.

HomeControl for room automation – iPhone App

The HomeControl app from Siemens offers you intuitive and straightforward operation of your heating, ventilation and air conditioning plants, including control of lighting and shading systems.

All Siemens apps can also be found under www.siemens.com/bt/apps

Type Overview

Product Number	Description	Datasheet	Page
2WR9300-0AA11-0A	PappaWin software		10-23
421314160	Cable holder for protection pocket mounting	N1831	6-19
428488060	Sealing gland complete, stem diameter 10 mm, sealing material EPDM		7-68
428616520	Water trap pipe	N1915	6-48
5TC9 200	Room temperature controllers, 1 NC contact		5-11
5TC9 201	Room temperature controllers, 1 CO contact		5-11
5TC9 202	Room temperature controllers, 3-position switch		5-12
5TC9 203	Room temperature controllers, direct floor heating		5-12
5TC9 220	Cover plates for room temperature controllers, NC/CO, electro white		5-13
5TC9 221	Cover plates for room temperature controllers, NC/CO, titanium white		5-13
5TC9 222	Cover plates for room temperature controllers, 3-position switch, electro white		5-13
5TC9 223	Cover plates for room temperature controllers, 3-position switch, titanium white		5-13
5TC9 224	Cover plates for room temperature controllers, direct floor heating, electro white		5-13
5TC9 225	Cover plates for room temperature controllers, direct floor heating, titanium white		5-13
5TC9 250	Cover plates for room temperature controllers, NC/CO, aluminum metallic		5-13
5TC9 251	Cover plates for room temperature controllers, NC/CO, carbon metallic		5-13
5TC9 252	Cover plates for room temperature controllers, 3-position switch, aluminum metallic		5-13
5TC9 253	Cover plates for room temperature controllers, 3-position switch, carbon metallic		5-13
5TC9 254	Cover plates for room temperature controllers, direct floor heating, aluminum metallic		5-13
5TC9 255	Cover plates for room temperature controllers, direct floor heating, carbon metallic		5-13
5WG11201AB02	N 120/02 choke, 640 mA	2.14.2.2	1-88
5WG11251AB02	Power supply unit DC 29 V, 160 mA with additional unchoked output, N 125/02	2.14.4.4	1-88
5WG11251AB12	Power supply unit DC 29 V, 320 mA with additional unchoked output, N 125/12	2.14.4.4	1-88
5WG11251AB22	Power supply unit DC 29 V, 640 mA with additional unchoked output, N 125/22	2.14.4.4	1-88
5WG11401AB03	N 140/03 line/backbone coupler	2.11.1.12	1-87
5WG11401AB13	N 140/13 line/backbone coupler	2.14.3.3	1-87
5WG11461AB02	N 146/02 KNX/IP Router	2.11.1.13	1-85
5WG11481AB11	N 148/11 USB interface	2.11.1.12	1-86
5WG11481AB22	N 148/22 KNX/IP Interface	2.11.1.14	1-85
7411100280	Terminal covers		2-10
9956467001	Optical reading head for PC with 9-pin plug		10-23
ACS26	Readout software	N2870	10-28
ACS790	Commissioning and plant operating software	N5649	2-7
ACS941	PC software for service	N5854	8-30
ACT20	Parameterizing and diagnostics software		10-33
ACT21	Parameterization software	N2870	10-28
ACT26	Setup and service software	N2870	10-28
ADN10	Two-port seat lockshield valve, PN10, DN10, 0..1.8	N2107	7-96
ADN15	Two-port seat lockshield valve, PN10, DN15, kvs 0..2.5	N2107	7-96
ADN20	Two-port seat lockshield valve, PN10, DN20, kvs 0..3.0	N2107	7-96
AEK84	Control module for WRV84..	N2833	10-38
AEN10	Angle lockshield valve, PN10, DN10, kvs 0..1.8	N2107	7-96
AEN15	Angle lockshield valve, PN10, DN15, kvs 0..2.5	N2107	7-96
AEN20	Angle lockshield valve, PN10, DN20, kvs 0..3.0	N2107	7-96
AEW2.1	Pulse adapter	N2831	2-13
AEW310.2	M-bus pulse adapter	N5383	10-33
AEW36.2	Siemeca™ AMR pulse adapter	N2873	10-27
AEW36.2	AMR pulse adapter	N2873	10-27
AFK914/C01	Handheld control	N2731	4-16
AGS2S.200/109	Conduit box with surge protection for solar panel sensor	N2488	1-25
AL100	Retrofit adapter for installed 2W..., 3W..., 4W... valves	N4878	7-39
AL40	Adapter for tamper-proof fitting for SSA.. actuators	N4893	7-27
ALC30.128	Memory card 128 KB for OCI600 / OZW10 / OZW30	N2529	10-30
ALC30.512	Memory card 512 KB for OCI600 / OZW10 / OZW30	N2529	10-30
ALE10	Electronic manometer for Siemens combi valves		7-167

NEW PRODUCT

Type Overview

Product Number	Description	Datasheet	Page
ALE11	Measuring lines and tips for Siemens combi valves		7-167
ALF41B100	Bypass extension, flanged connections, DN100	N4404	7-127
ALF41B125	Bypass extension, flanged connections, DN125	N4404	7-127
ALF41B15	Bypass extension, flanged connections, DN15	N4404	7-130
ALF41B150	Bypass extension, flanged connections, DN150	N4404	7-127
ALF41B25	Bypass extension, flanged connections, DN25	N4404	7-130
ALF41B40	Bypass extension, flanged connections, DN40	N4404	7-130
ALF41B50	Bypass extension, flanged connections, DN50	N4404	7-130
ALF41B65	Bypass extension, flanged connections, DN65	N4404	7-127
ALF41B80	Bypass extension, flanged connections, DN80	N4404	7-127
ALG122	Malleable cast iron fitting G ¾" / Rp ⅜", set of 2		7-116
ALG123	Malleable cast iron fitting G ¾" / Rp ⅜", set of 3		7-117
ALG132	Brass fitting G ½" / R ⅜", set of 2		7-116
ALG133	Brass fitting G ½" / R ⅜", set of 3		7-117
ALG142	Brass fitting G ¾" / R ½", set of 2		7-116
ALG143	Brass fitting G ¾" / R ½", set of 3		7-117
ALG152	Malleable cast iron fitting G 1" / Rp ½", set of 2		7-116
ALG152B	Brass fitting G 1" / Rp ½", 100°C, set of 2		7-116
ALG153	Malleable cast iron fitting G 1" / Rp ½", set of 3		7-117
ALG153B	Brass fitting G 1" / Rp ½", 100 °C, set of 3		7-117
ALG202	Malleable cast iron fitting G 1¼" / Rp ¾", set of 2		7-116
ALG202B	Brass fitting G 1¼" / Rp ¾", 100 °C, set of 2		7-116
ALG203	Malleable cast iron fitting G 1¼" / Rp ¾", set of 3		7-117
ALG203B	Brass fitting G 1¼" / Rp ¾", 100 °C, set of 3		7-117
ALG252	Malleable cast iron fitting G 1½" / Rp 1", set of 2		7-116
ALG252B	Brass fitting G 1½" / Rp 1", 100 °C, set of 2		7-116
ALG253	Malleable cast iron fitting G 1½" / Rp 1", set of 3		7-117
ALG253B	Brass fitting G 1½" / Rp 1", 100 °C, set of 3		7-117
ALG322	Malleable cast iron fitting G 2" / Rp 1¼", set of 2		7-116
ALG322B	Brass fitting G 2" / Rp 1¼", 100 °C, set of 2		7-116
ALG323	Malleable cast iron fitting G 2" / Rp 1¼", set of 3		7-117
ALG323B	Brass fitting G 2" / Rp 1¼", 100 °C, set of 3		7-117
ALG402	Malleable cast iron fitting G 2¼" / Rp 1½", set of 2		7-116
ALG402B	Brass fitting G 2¼" / Rp 1½", 100 °C, set of 2		7-116
ALG403	Malleable cast iron fitting G 2¼" / Rp 1½", set of 3		7-117
ALG403B	Brass fitting G 2¼" / Rp 1½", 100 °C, set of 3		7-117
ALG502	Malleable cast iron fitting G 2¾" / Rp 2", set of 2		7-116
ALG502B	Brass fitting G 2 ¾" / Rp 2", 100 °C, set of 2		7-116
ALG503	Malleable cast iron fitting G 2¾" / Rp 2", set of 3		7-117
ALG503B	Brass fitting G 2 ¾" / Rp 2", 100 °C, set of 3		7-117
ALG80WRI	Mounting kit for WRV81/84 replacement	N2803	10-38
ALG83WRI	Mounting kit for WRV83 replacement	N2803	10-39
ALP45	Spare nipples for VPI45.., set of 2, for VPI45..		7-167
ALP46	Blanking plug for P/T ports		7-167
ALP47	Drain ball valve inclusive O-ring		7-167
ALP48	Combined P/T port and drain ball valve with red ribbon		7-167
ALP49	Long P/T ports (set of 2 pieces)		7-167
ALP50	Black spare valve protection cap (set of 2 pieces)		7-167
ALP52	Pre-setting key for VPI45..		7-169
ALS152	Steel fitting G ¾", d=21.3 mm, set of 2		7-116
ALS202	Steel fitting G 1", d=26.8 mm, set of 2		7-116
ALS252	Steel fitting G 1¼", d=33.7 mm, set of 2		7-116
ALT-AB200	Protection pocket, perforated, 200 mm	N1193	5-56
ALT-C001	Mounting kit for RAK../RAZ..	N1193	5-56
ALT-DB100J	Protection pocket 100 mm, MS63 nickel-plated, G½", PN10, 2xLW7	N1194	5-58
ALT-DB150J	Protection pocket 150 mm, MS63 nickel-plated, G½", PN10, 2xLW7	N1194	5-58
ALT-DB280J	Protection pocket 280 mm, MS63 nickel-plated, G½", PN10, 2xLW7	N1194	5-58

NEW PRODUCT

Type Overview

Product Number	Description	Datasheet	Page
ALT-DB450J	Protection pocket 450 mm, MS63 nickel-plated, G½", PN10, 2xLW7	N1194	5-58
ALT-DS100J	Protection pocket, 100 mm, G½" LW15, stainless steel V4A	N1194	5-58
ALT-DS150J	Protection pocket, 150 mm, G½" LW15, stainless steel V4A	N1194	5-58
ALT-DS280J	Protection pocket, 280 mm, G½" LW15, stainless steel V4A	N1194	5-58
ALT-DS450J	Protection pocket, 450 mm, G½" LW15, stainless steel V4A	N1194	5-58
ALT-SB100	Protection pocket, 100 mm, MS63 nickel-plated, G½", PN10, LW7	N1194	5-56
ALT-SB150	Protection pocket 150 mm, MS63 nickel-plated, G½", PN10, LW7	N1194	5-56
ALT-SB200	Protection pocket 200 mm, MS63 nickel-plated, G½", PN10, LW7	N1194	5-56
ALT-SB280	Protection pocket 280 mm, MS63 nickel-plated, G½", PN10, LW7	N1194	5-56
ALT-SB450	Protection pocket 450 mm, MS63 nickel-plated, G½", PN10, LW7	N1194	5-56
ALT-SS100	Protection pocket, 100 mm, G½" LW7, stainless steel V4A	N1194	5-56
ALT-SS150	Protection pocket 150 mm, stainless steel V4A, G½", PN16, LW7	N1194	5-56
ALT-SS280	Protection pocket 280 mm, stainless steel V4A, G½", PN16, LW7	N1194	5-56
ALT-SS450	Protection pocket 450 mm, stainless steel V4A, G½", PN16, LW7	N1194	5-56
ALT-SSF100	Protection pocket 100 mm, stainless steel V4A, G½", PN40, LW7	N1194	5-56
ALT-SSF150	Protection pocket 150 mm, stainless steel V4A, G½", PN40, LW7	N1194	5-56
ALT-SSF200	Protection pocket 200 mm, stainless steel V4A, G½", PN40, LW7	N1194	5-56
ALT-SSF280	Protection pocket 280 mm, stainless steel V4A, G½", PN40, LW7	N1194	5-56
ALT-SSF450	Protection pocket 450 mm, stainless steel V4A, G½", PN40, LW7	N1194	5-56
ALT-SSF600	Protection pocket 600 mm, stainless steel V4A, G½", PN40, LW7	N1194	5-56
ALT35	Protection pocket 35 mm, R ⅜", for nominal pipe size DN20...DN40	N2821	10-39
ALT65	Protection pocket 65 mm, R ⅜", for nominal pipe size DN50...DN80	N2851	10-39
ALW84	Conduit box for WRV84..	N2824	10-37
AMR	AMR wireless system 868 MHz	N2870	10-26
AQB2000	Mounting bracket for differenential pressure sensor for air	N1916	6-42
AQB2001	Connection kit to mount QBE2002-P...	N1909	6-47
AQB2002	Connection kit to mount QBE63../64.., QBE3..	N1922	6-50
AQB21.2	Top hat rail adapter for differential pressure sensor for air	N1910	6-42
AQB22.1	Mounting bracket for pressure sensor QBE2002	N1909	6-47
AQE2102	Compression fitting with threaded nipple ½"	N1781	6-13
AQF3100	Radiation shield for exterior wall mounting	N1858	6-23
AQF3101	Filter cap for humidity sensor	N1858	6-23
AQF3150	Exchangeable measuring tip	N1858	6-23
AQF3153	Service-Set		6-23
AQF4150	Exchangeable measuring tip, with calibration certificate	N1859	6-23
AQM63.0	Mounting flange, adjustable depth	N1193	5-63
AQM63.2	3 capillary supports and 3 spacers for QAF.. Mounting	N1821	5-64
AQM63.3	6 Capillary tube clamps for QAF../QAM.. mounting	N1284	5-64
AQR2500NF	Mounting plate for front module with passiv temperature measurement, 70.8 x 70.8 mm	N1408	6-8
AQR2500NG	Mounting plate for front module with passiv temperature measurement, 110 x 64 mm	N1408	6-8
AQR2500NH	Mounting plate for front module with passiv temperature measurement, 83 x 83 mm	N1408	6-8
AQR2500NJ	Mounting plate for front module with passiv temperature measurement, 64 x 110 mm	N1408	6-8
AQR2510NFW	Frame DELTA line for front module	N1410	6-8
AQR2510NGW	Frame DELTA azio for front module	N1410	6-8
AQR2510NHW	Frame DELTA miro for front module	N1410	6-8
AQR2530NNW	Front module for base module, without sensor	N1410	6-36
AQR2531ANW	Front module with passiv temperature measurement, LG-Ni1000	N1408	6-8
AQR2531BNW	Front module with passiv temperature measurement, Pt1000	N1408	6-8
AQR2531FNW	Front module with passiv temperature measurement, NTC 10k	N1408	6-8
AQR2532NNW	Front module for base module, temperature (active)	N1410	6-25
AQR2533NNW	Front module for base module, humidity	N1410	6-25
AQR2534ANW	Front module for base module, humidity and temperature (active, LG-Ni1000)	N1410	6-25
AQR2534FNW	Front module for base module, humidity and temperature (active, NTC 10k)	N1410	6-25
AQR2535NNW	Front module for base module, humidity and temperature (active)	N1410	6-25
AQR2535NNWQ	Front module for base module, humidity and temperature, with LED	N1410	6-38
AQR2540NF	Base module for temperature and humidity measurement, 70.8 x 70.8 mm	N1410	6-24

NEW PRODUCT

Type Overview

Product Number	Description	Datasheet	Page
AQR2540NG	Base module for temperature and humidity measurement, 110 x 64 mm	N1410	6-24
AQR2540NH	Base module for temperature and humidity measurement, 83 x 83 mm	N1410	6-24
AQR2540NJ	Base module for temperature and humidity measurement, 64 x 110 mm	N1410	6-24
AQR2546NF	Base module with integrated [CO2/] measurement , 70.8 x 70.8 mm	N1410	6-37
AQR2546NG	Base module with integrated [CO2/] measurement , 110 x 64 mm	N1410	6-37
AQR2546NH	Base module with integrated [CO2/] measurement , 83 x 83 mm	N1410	6-37
AQR2546NJ	Base module with integrated [CO2/] measurement , 64 x 110 mm	N1410	6-37
AQR2547NF	Base module with integrated VOC measurement , 70.8 x 70.8 mm	N1410	6-36
AQR2547NG	Base module with integrated VOC measurement , 110 x 64 mm	N1410	6-36
AQR2547NH	Base module with integrated VOC measurement , 83 x 83 mm	N1410	6-36
AQR2547NJ	Base module with integrated VOC measurement , 64 x 110 mm	N1410	6-36
AQR2548NF	Base module with integrated [CO2/] and VOC measurement , 70.8 x 70.8 mm	N1410	6-38
AQR2548NG	Base module with integrated [CO2/] and VOC measurement , 110 x 64 mm	N1410	6-38
AQR2548NH	Base module with integrated [CO2/] and VOC measurement , 83 x 83 mm	N1410	6-38
AQR2548NJ	Base module with integrated [CO2/] and VOC measurement , 64 x 110 mm	N1410	6-38
AQR2570NF	Base module for temperature and / or humidity measurement, with KNX / PL-Link, 70.8 x 70.8	N1411	6-24
AQR2570NG	Base module for temperature and / or humidity measurement, with KNX / PL-Link, 110 x 64	N1411	6-24
AQR2570NH	Base module for temperature and / or humidity measurement, with KNX / PL-Link, 83 x 83	N1411	6-24
AQR2570NJ	Base module for temperature and / or humidity measurement, with KNX / PL-Link, 64 x 110	N1411	6-24
AQR2576NF	Base module for CO_2 measurement, with KNX / PL-Link, 70.8 x 70.8 mm	N1411	6-37
AQR2576NG	Base module for CO_2 measurement, with KNX / PL-Link, 110 x 64 mm	N1411	6-37
AQR2576NH	Base module for CO_2 measurement, with KNX / PL-Link, 83 x 83 mm	N1411	6-37
AQR2576NJ	Base module for CO_2 measurement, with KNX / PL-Link, 64 x 110 mm	N1411	6-37
AQX2000	AC 230 V extension module for QXA2000	N1542	6-33
AQY2010	Remote sensing cable 3 m for sensor tip.	N1859	6-23
ARG10.DA	Operating set in Danish	N5362	10-30
ARG10.DE	Operating set in German	N5362	10-30
ARG10.GB	Operating set in English	N5362	10-30
ARG22.1	Changeover cable holder for QAP..	N1831	6-19
ARG22.2	Aluminium bar attachment for QAP..	N1831	6-19
ARG30.DA	Operating set in Danish	N2841	10-35
ARG30.DE	Operating set in German	N2841	10-35
ARG30.FR	Operating set in French	N2841	10-35
ARG30.GB	Operating set in English	N2841	10-35
ARG30.IT	Operating set in Italian	N2841	10-35
ARG30.NL	Operating set in Dutch	N2841	10-35
ARG30.SV	Operating set in Swedish	N2841	10-35
ARG62.201	Front panel mounting frame	N3101	1-53
ARG62.21	Protective small enclosure for wall mounting, not applicable for RWD32		1-58
ARG62.22	Protective big enclosure for wall mounting		1-58
ARG70	Mounting plate 120 x 120 mm for 4 x 4" housing	N3009	5-9
ARG70.1	Mounting plate 96 x 120 mm for 2 x 4" housing	N3009	5-9
ARG70.2	Mounting plate 112 x 130 mm for surface wiring	N3009	5-9
ARG70.3	Mounting plate 82 x 82 x 10 mm	N3009	5-43
ARG71	Conduit box	N3009	5-16
ARG86.3	Changeover cable holder for QAH11..	N1840	5-29
ASA23U10	Cable with auxiliary switch, Type 7, 1 m		7-30
ASA23U20	Cable with auxiliary switch, Type 7, 2 m		7-30
ASC1.6	Auxiliary switch for SKB6../ SKC6../ SKD6..	N4566	7-58
ASC10.20	Double auxiliary switch	N4520	7-180
ASC10.21	Double auxiliary switch	N4520	7-180
ASC10.51	Auxiliary switch for SA..31../SA..61../SA..81..	N4501	7-49
ASC2.1/18	Auxiliary switch for SFA21.../ SFA71.../ SFP21.../ SFP71...	N4863	7-35
ASC36	Double auxiliary switch for SQL36E	N4505	7-181

NEW PRODUCT

Type Overview

Product Number	Description	Datasheet	Page
ASC77.1E	External auxiliary switch assembly 1 switch	N4615	8-11
ASC77.2E	External auxiliary switch assembly 2 switches	N4615	8-11
ASC9.3	Double auxiliary switch for SKB/ C/ D32../82..	N4561	7-58
ASC9.4	Double auxiliary switch for SQL33../83../35../85.., SQX32../82..	N4554	7-178
ASC9.5	Auxiliary switch for SQK33.., SQL33../83../35../85.., SQX32../82..	N4554	7-178
ASC9.6	Auxiliary switch for SQS35../85.., SQD35../85..	N4573	7-47
ASC9.7	Auxiliary switch for SQK34../84..	N4508	7-178
ASE1	Replacement electronic for MXG461.., MXF461.. and MXG461S.., DN15...32	N4455	7-135
ASE12	Replacement electronic for MXG461B.., MVF461H.. and MXG462S..		7-80
ASE2	Replacement electronic for MXG461.., MXF461.., DN40...65	N4455	7-135
ASK30	Adapter to upgrade older Landis&Gyr valves	N4573	7-46
ASK31	Mounting set for SQL33.. / 83.. / 35.. / 85.. and slipper valves VBF21..from DN65	N4506	7-178
ASK31N	Mounting set for SAL.. onto VBF21..	N4502	7-177
ASK32	Mounting set for SQK33.. / SQL33.. / 83.. and slipper valves VBI31.. / VBG31.. / VCI31.. / VBF21.. up to DN50	N4506	7-178
ASK33	Mounting set for SQK33.. / SQL33.. / 83.. and butterfly valves VKF41..	N4506	7-178
ASK33N	Mounting set for SAL.. onto VKF41..	N4502	7-177
ASK35.1	Mounting set for SQL35.. / 85.. and butterfly valves VKF46.., DN40 to DN65	N4136	7-178
ASK35.2	Mounting set for SQL35.. / 85.. and butterfly valves VKF46.., DN80 to DN125	N4136	7-178
ASK39.1	Weathershield for SAX../SAL..	N4501	7-49
ASK40	Mounting sets for SQK33.. / SQL33.. / 83.. for third-party devices	N4291	7-179
ASK41	Mounting sets for SQK33.. / SQL33.. / 83.. for third-party devices	N4291	7-179
ASK46.1	Manual adjuster for VKF46.., DN40 to DN65	N4136	7-198
ASK46.2	Manual adjuster for VKF46.., DN80 to DN125	N4136	7-198
ASK46.3	Manual adjuster for VKF46.., DN150 to DN200	N4136	7-198
ASK46.4	Manual adjuster for VKF46.., DN250 to DN400	N4136	7-198
ASK50	Stroke inverter for SKD..	N4561	7-58
ASK51	Stroke inverter for SKB..	N4564	7-58
ASK55.2	Clamp for linkage (5...8 mm dia.)	N4698	8-27
ASK71.1	Rotary/linear mounting kit for duct mounting	N4699	8-11
ASK71.11	Rotary/linear mounting kit for duct or frame mounting	N4697	8-11
ASK71.13	Rotary/linear mounting kit with lever and bracket	N4697	8-11
ASK71.14	Rotary/linear mounting kit with lever	N4697	8-11
ASK71.2	Rotary/linear mounting kit for frame mounting	N4699	8-11
ASK71.3	Rotary/linear mounting kit with lever	N4699	8-11
ASK71.4	Rotary/linear mounting kit with lever and bracket	N4699	8-11
ASK71.5	Rotary/linear mounting kit	N4698	8-18
ASK71.6	Rotary/linear mounting kit with bracket	N4698	8-18
ASK71.9	Universal lever	N4697	8-11
ASK72.1	Linear/rotary mounting kit with cardan joint	N4699	8-27
ASK72.2	Linear/rotary mounting kit with bracket	N4699	8-27
ASK72.3	Linear/rotary mounting kit with bracket	N4697	8-27
ASK72.4	Fixing screw	N4697	8-27
ASK72.5	Fixing screw	N4698	8-27
ASK73.1	Bracket for power pack	N4699	8-11
ASK73.2	Flexible bracket for power pack	N4699	8-11
ASK73.3	Bracket for power pack	N4697	8-11
ASK74.1	Special shaft adapter	N4699	8-11
ASK74.7	Shaft extension	N4699	8-11
ASK75.1	Weather shield for rotary actuator	N4699	8-11
ASK75.2	Weather shield for linear actuator	N4699	8-27
ASK75.3	Weather shield	N4697	8-11
ASK75.4	Weather shield for rotarytype actuator GBB/GCA/GIB...1E	N4699	8-11
ASK75.5	Weather shield for rotary-/linear-type actuator GDB/GLB/GSF...E	N4698	8-18
ASK75.6	Weather shield for rotary-/linear-type actuator GMA/GEB...E	N4697	8-11
ASK77.2	Mounting kit for rotary actuators GMA..1E with spring-return		7-184
ASK77.3	Mounting kit for rotary actuators GDB..1E and GLB..1E without spring-return		7-184

NEW PRODUCT

Type Overview

Product Number	Description	Datasheet	Page
ASK77.4	Mounting kits for rotary actuators GQD..1A with spring-return		7-184
ASK77.6	Ball valve mounting set, DN65, DN80, DN100	N4120	7-182
ASK77.7	Ball valve mounting set, DN125	N4120	7-182
ASK77.8	Ball valve mounting set, DN150	N4120	7-182
ASK78.10	Centering insert 12 mm dia.	N4698	8-18
ASK78.11	Centering insert 3/8" dia.	N4698	8-18
ASK78.12	Centering insert D-profile fixed 12 mm dia. × 9 mm	N4698	8-18
ASK78.14	Centering insert 8 mm square	N4698	8-18
ASK78.2	T-lever valve BG	N4698	8-18
ASK78.3	Insert for small shaft dia.	N4698	8-18
ASK78.4	Centering insert D-profile 12.9 mm dia.	N4698	8-18
ASK78.5	Centering insert 12.7 mm dia. (½")	N4698	8-18
ASK78.6	Centering insert 8 mm square	N4698	8-18
ASK78.7	Centering insert 10 mm square	N4698	8-18
ASK78.8	Centering insert 8 mm dia.	N4698	8-18
ASK78.9	Centering insert 10 mm dia.	N4698	8-18
ASK79.165	OpenAir Electronic Fusible Link.	155-746	8-38
ASK79.250	OpenAir Electronic Fusible Link.	155-746	8-38
ASK79.3/10	Interlocking plate for fire protection applications		8-32
ASK79.3/12	Interlocking plate for fire protection applications		8-32
ASK79.350	OpenAir Electronic Fusible Link.	155-746	8-38
ASP23U10	Connecting cable with auxiliary switch, Type 8, 1 m		7-33
ASP23U20	Connecting cable with auxiliary switch, Type 8, 2 m		7-33
AST10	Manual operator unit	N5851	8-30
AST11	Interface converter	N5852	8-30
AST21	Service kit		8-30
ASV181.1E/3	VAV modular controller	N3545	8-30
ASY100	Terminal block connector DC0...10 V, AC 24 V for SSA61../SSB61../SSP61../SSD61..	N4864	7-27
ASY23L08	Connecting cable, 0.8 m, Type 1		7-30
ASY23L10	Connecting cable, 1 m, Type 1		7-30
ASY23L100	Connecting cable, 10 m, Type 1		7-30
ASY23L100B	Connecting cable, 10 m, Type 4, black		7-30
ASY23L100HF	Connecting cable, 10 m, Type 1, HF		7-30
ASY23L150	Connecting cable, 15 m, Type 1		7-30
ASY23L20	Connecting cable, 2 m, Type 1		7-30
ASY23L20HF	Connecting cable, 2 m, Type 1, HF		7-30
ASY23L20LD	Connecting cable, 2 m, Type 1, LED		7-30
ASY23L30	Connecting cable, 3 m, Type 1		7-30
ASY23L30B	Connecting cable, 3 m, Type 4, black		7-30
ASY23L40	Connecting cable, 4 m, Type 1		7-30
ASY23L50	Connecting cable, 5 m, Type 1		7-30
ASY23L50B	Connecting cable, 5 m, Type 4, black		7-30
ASY23L50HF	Connecting cable, 5 m, Type 1, HF		7-30
ASY23L50LD	Connecting cable, 5 m, Type 1, LED		7-30
ASY23L60	Connecting cable, 6 m, Type 1		7-30
ASY23L70	Connecting cable, 7 m Type 1		7-30
ASY3L15	Connecting cable 1.5 m, 3-position, AC 230 V		7-27
ASY3L25	Connecting cable 2.5 m, 3-position, AC 230 V		7-27
ASY3L45	Connecting cable 4.5 m, 3-position, AC 230 V		7-27
ASY6AL20	Connecting cable, 0...10 V, Type 2, 2 m		7-30
ASY6AL50	Connecting cable, 0...10 V, Type 2, 5 m		7-30
ASY6AL70	Connecting cable, 0...10 V, Type 2, 7 m		7-30
ASY6L15	Connecting cable 1.5 m, DC 0...10 V, AC/DC 24 V		7-27
ASY6L25	Connecting cable 2.5 m, DC 0...10 V, AC/DC 24 V		7-27
ASY6L45	Connecting cable 4.5 m, DC 0..10 V, AC/DC 24 V		7-27

NEW PRODUCT

Type Overview

Product Number	Description	Datasheet	Page
ASY6L45HF	Connecting cable 4.5 m, DC 0...10 V, AC/DC 24 V, halogen-free, VDE 0207-24		7-27
ASY6PL20	Connecting cable, 0...10 V, Type 3, 2 m		7-30
ASY6PL20B	Connecting cable, 0...10 V, Type 6, 2 m, black		7-30
ASY6PL20HF	Connecting cable, 0...10 V Type 3, 2 m, HF		7-30
ASY6PL50	Connecting cable, 0...10 V, Type 3, 5 m		7-30
ASY6PL50HF	Connecting cable, 0...10 V, Type 3, 5 m, HF		7-30
ASY6PL70	Connecting cable, 0...10 V, Type 3, 7 m		7-30
ASY6PL70HF	Connecting cable, 0...10 V, Type 3, 7 m, HF		7-30
ASY8L15	Connecting cable 1.5 m, 3-position, AC 24 V		7-27
ASY8L25	Connecting cable 2.5 m, 3-position, AC 24 V		7-27
ASY8L25B	Connecting cable 2.5 m, 3-position, AC 24 V, with Batigyr connector		7-44
ASY8L45	Connecting cable 4.5 m, 3-position, AC 24 V		7-27
ASY8L45HF	Connecting cable 4.5 m, 3-position, AC 24 V, halogen-free, VDE 0207-24		7-27
ASY98	Retaining screw for cable connector		7-36
ASY99	Terminal block connector 3 position, AC 24 V for SSA81../SSB81../SSD81../SSP81..		7-27
ASZ10.20	Potentiometer for SQL321B50	N4520	7-180
ASZ10.21	Potentiometer for SQL321B50/SQL321B150	N4520	7-180
ASZ10.22	Potentiometer for SQL321B270/SQL321B570	N4520	7-180
ASZ10.23	Potentiometer for SQL321B1400/SQL321B2650	N4520	7-180
ASZ36	Potentiometer 1000 Ohm for SQL36E..	N4505	7-181
ASZ6.5	Stem heating element for media < 0 °C		7-58
ASZ6.6	Stem heating element for media < 0 °C	N4501	7-49
ASZ7.3	Potentiometer 0...1000 Ohm for SKB/ C/ D32../82..	N4564	7-58
ASZ7.31	Potentiometer 0...135 Ohm for SKB/ C/ D32../82..	N4564	7-58
ASZ7.32	Potentiometer 0...200 Ohm for SKB/ C/ D32../82..	N4564	7-58
ASZ7.4	1 auxiliary switch and 1 potentiometer for SQX32../SQX82../SQL33../SQL83../SQL35../SQL85..	N4554	7-178
ASZ7.5/1000	Potentiometer 0...1000 Ohm for SA..31../SA..81..	N4501	7-49
ASZ7.5/135	Potentiometer 0...135 Ohm for SA..31../SA..81..	N4501	7-49
ASZ7.5/200	Potentiometer 0...200 Ohm for SA..31../SA..81..	N4501	7-49
ATN3	Manual knob, white, RAL9016, for VDN../VEN../VUN../VPD../VPE..	N2100	7-95
ATN4	Manual knob, white, for VDN../VEN../VUN../VPD../VPE..	N2100	7-95
AUD3	Digital time switch	N2464	1-12
AUZ3.1	Analog 24-hour time switch	N2464	1-12
AUZ3.7	Analog 7-day time switch	N2464	1-12
AV100-VP1	Seal insertion for VPD.. and VPE.. MiniCombiValves (MCV)	N2100	7-164
AV301	Adapter for valves with M30 x 1.5	N2179	7-31
AV302	Adapter for valves with M28 x 1.5, Comap, Markaryd, Herz	N4884	7-31
AV303	Adapter for valves with M30 x 1, TA	N4884	7-31
AV304	Adapter various (5 pieces)	N4884	7-31
AV51	Third-party valve adapter on Beulco valve	N2100	7-28
AV52	Third-party valve adapter on Comap valve	N2100	7-28
AV53	Third-party valve adapter on Danfoss RA-N (RA2000)	N2100	7-28
AV533	Adapter for Danfoss RA2000, Plastic	N4884	7-31
AV54	Third-party valve adapter on Danfoss RAVL	N2100	7-28
AV55	Third-party valve adapter on Danfoss RAV	N2100	7-28
AV56	Third-party valve adapter on Giacomini valve	N2100	7-28
AV57	Third-party valve adapter on Herz valve	N2100	7-28
AV58	Third-party valve adapter on Oventrop M30x1	N2100	7-28
AV59	Adapter for Vaillant	N2100	7-31
AV60	Third-party valve adapter on TA to 2002	N2100	7-28
AV61	Third-party valve adapter on MMA Markaryd	N2100	7-28
AV63	Adapter for Giacomini	N4884	7-31
AV64	Adapter for Pettinaroli M28 x 1.5	N4884	7-31
AVN1	Valve insert for VDN../VEN.. und VUN..	N2100	7-95
AVN15-15	Compression fitting ½", for 15 mm copper and soft steel pipes	N2100	7-99

NEW PRODUCT

Type Overview

Product Number	Description	Datasheet	Page
AVN15A16	Compression fitting ½", for 16x2 mm plastic pipes with aluminum foil	N2100	7-99
AZX420	Function Module	N4519	7-50
AZX61.1	Funtion module for SA..61.., sequence control/changeover of acting direction	N4501	7-49
BAU200	Universal digital indicator	N5312	1-83
BBV4003	Remote sensor 1.5 m	N2886	10-12
BBV4004	Remote sensor 2.5 m	N2886	10-12
BBV4005	Remote sensor 5 m	N2886	10-12
BOZ4002	Square bolt 4.5 mm with cross pin	N2886	10-11
BOZ4003	Square bolt 6 mm with cross pin	N2886	10-11
BOZ4004	Square bolt 12 mm with cross pin	N2886	10-11
BSG-Z	Complete range of scales for BSG..	N1991	1-81
BSG21.1	Setpoint adjuster, passive, scale 0...50 °C (exchangeable)	N1991	1-81
BSG21.2	Setpoint adjuster, passive, scale 0...50 °C	N1991	1-81
BSG21.3	Setpoint adjuster, passive, scale 10...30 °C	N1991	1-81
BSG21.5	Setpoint adjuster, passive, temperature ranges: -20...20 °C; 20...60 °C; -3...3 K	N1991	1-81
BSG61	Active setpoint adjuster 0...100 %, for flush panel mounting	N1992	1-81
C/VVF31.100-160	2-port seat valve, flanged, PN10, DN100, kvs 160	N4320	7-62
C/VVF31.125-250	2-port seat valve, flanged, PN10, DN125, kvs 250	N4320	7-62
C/VVF31.15-2.5	2-port seat valve, flanged, PN10, DN15, kvs 2.5	N4320	7-62
C/VVF31.150-315	2-port seat valve, flanged, PN10, DN150, kvs 315	N4320	7-62
C/VVF31.24	2-port seat valve, flanged, PN10, DN25, kvs 5	N4320	7-62
C/VVF31.25	2-port seat valve, flanged, PN10, DN25, kvs 7.5	N4320	7-62
C/VVF31.25-10	2-port seat valve, flanged, PN10, DN25, kvs 10	N4320	7-62
C/VVF31.25-6.3	2-port seat valve, flanged, PN10, DN25, kvs 6.3	N4320	7-62
C/VVF31.39	2-port seat valve, flanged, PN10, DN40, kvs 12	N4320	7-62
C/VVF31.40	2-port seat valve, flanged, PN10, DN40, kvs 19	N4320	7-62
C/VVF31.40-16	2-port seat valve, flanged, PN10, DN40, kvs 16	N4320	7-62
C/VVF31.40-25	2-port seat valve, flanged, PN10, DN40, kvs 25	N4320	7-62
C/VVF31.50	2-port seat valve, flanged, PN10, DN50, kvs 31	N4320	7-62
C/VVF31.50-40	2-port seat valve, flanged, PN10, DN50, kvs 40	N4320	7-62
C/VVF31.65	2-port seat valve, flanged, PN10, DN65, kvs 49	N4320	7-62
C/VVF31.65-63	2-port seat valve, flanged, PN10, DN65, kvs 63	N4320	7-62
C/VVF31.80	2-port seat valve, flanged, PN10, DN80, kvs 78	N4320	7-62
C/VVF31.80-100	2-port seat valve, flanged, PN10, DN80, kvs 100	N4320	7-62
C/VVF31.90	2-port seat valve, flanged, PN10, DN100, kvs 124	N4320	7-62
C/VVF31.91	2-port seat valve, flanged, PN10, DN125, kvs 200	N4320	7-62
C/VVF31.92	2-port seat valve, flanged, PN10, DN150, kvs 300	N4320	7-62
C/VVF40.100-124	2-port seat valve, flanged, PN16, DN100, kvs 124	N4330	7-65
C/VVF40.100-160	2-port seat valve, flanged, PN16, DN100, kvs 100	N4330	7-65
C/VVF40.125-200	2-port seat valve, flanged, PN16, DN125, kvs 200	N4330	7-65
C/VVF40.125-250	2-port seat valve, flanged, PN16, DN125, kvs 250	N4330	7-65
C/VVF40.15-1.9	2-port seat valve, flanged, PN16, DN15, kvs 1.9	N4330	7-65
C/VVF40.150-300	2-port seat valve, flanged, PN16, DN150, kvs 300	N4330	7-65
C/VVF40.150-315	2-port seat valve, flanged, PN16, DN150, kvs 315	N4330	7-65
C/VVF40.25-10	2-port seat valve, flanged, PN16, DN25, kvs 10	N4330	7-65
C/VVF40.25-5	2-port seat valve, flanged, PN16, DN25, kvs 5	N4330	7-65
C/VVF40.25-6.3	2-port seat valve, flanged, PN16, DN25, kvs 6.3	N4330	7-65
C/VVF40.25-7.5	2-port seat valve, flanged, PN16, DN25, kvs 7.5	N4330	7-65
C/VVF40.40-12	2-port seat valve, flanged, PN16, DN40, kvs 12	N4330	7-65
C/VVF40.40-16	2-port seat valve, flanged, PN16, DN40, kvs 16	N4330	7-65
C/VVF40.40-19	2-port seat valve, flanged, PN16, DN40, kvs 19	N4330	7-65
C/VVF40.40-25	2-port seat valve, flanged, PN16, DN40, kvs 25	N4330	7-65
C/VVF40.50-31	2-port seat valve, flanged, PN16, DN50, kvs 31	N4330	7-65
C/VVF40.50-40	2-port seat valve, flanged, PN16, DN50, kvs 40	N4330	7-65
C/VVF40.65-49	2-port seat valve, flanged, PN16, DN65, kvs 49	N4330	7-65
C/VVF40.65-63	2-port seat valve, flanged, PN16, DN65, kvs 63	N4330	7-65
C/VVF40.80-100	2-port seat valve, flanged, PN16, DN80, kvs 100	N4330	7-65

NEW PRODUCT

Type Overview

Product Number	Description	Datasheet	Page
C/VVF40.80-78	2-port seat valve, flanged, PN16, DN80, kvs 78	N4330	7-65
C/VVI41.15-2.5	2-port valve, internal thread, PN16, DN15, kvs 2.5	N4362	7-107
C/VVI41.15-4	2-port valve, internal thread, PN16, DN15, kvs 4	N4362	7-107
C/VVI41.20-6.3	2-port valve, internal thread, PN16, DN20, kvs 6.3	N4362	7-107
C/VVI41.25-10	2-port valve, internal thread, PN16, DN25, kvs 10	N4362	7-107
C/VVI41.32-16	2-port valve, internal thread, PN16, DN32, kvs 16	N4362	7-107
C/VVI41.40-25	2-port valve, internal thread, PN16, DN40, kvs 25	N4362	7-107
C/VVI41.50-40	2-port valve, internal thread, PN16, DN50, kvs 40	N4362	7-107
C/VXF31.100-160	3-port seat valve, flanged, PN10, DN100, kvs 160	N4420	7-121
C/VXF31.125-250	3-port seat valve, flanged, PN10, DN125, kvs 250	N4420	7-121
C/VXF31.150-315	3-port seat valve, flanged, PN10, DN150, kvs 315	N4420	7-121
C/VXF31.24	3-port seat valve, flanged, PN10, DN25, kvs 5	N4420	7-121
C/VXF31.25	3-port seat valve, flanged, PN10, DN25, kvs 7.5	N4420	7-121
C/VXF31.25-10	3-port seat valve, flanged, PN10, DN25, kvs 10	N4420	7-121
C/VXF31.25-6.3	3-port seat valve, flanged, PN10, DN25, kvs 6.3	N4420	7-121
C/VXF31.39	3-port seat valve, flanged, PN10, DN40, kvs 12	N4420	7-121
C/VXF31.40	3-port seat valve, flanged, PN10, DN40, kvs 19	N4420	7-121
C/VXF31.40-16	3-port seat valve, flanged, PN10, DN40, kvs 16	N4420	7-121
C/VXF31.40-25	3-port seat valve, flanged, PN10, DN40, kvs 25	N4420	7-121
C/VXF31.50	3-port seat valve, flanged, PN10, DN50, kvs 31	N4420	7-121
C/VXF31.50-40	3-port seat valve, flanged, PN10, DN50, kvs 40	N4420	7-121
C/VXF31.65	3-port seat valve, flanged, PN10, DN65, kvs 49	N4420	7-121
C/VXF31.65-63	3-port seat valve, flanged, PN10, DN65, kvs 63	N4420	7-121
C/VXF31.80	3-port seat valve, flanged, PN10, DN80, kvs 78	N4420	7-121
C/VXF31.80-100	3-port seat valve, flanged, PN10, DN80, kvs 100	N4420	7-121
C/VXF31.90	3-port seat valve, flanged, PN10, DN100, kvs 124	N4420	7-121
C/VXF31.91	3-port seat valve, flanged, PN10, DN125, kvs 200	N4420	7-121
C/VXF31.92	3-port seat valve, flanged, PN10, DN150, kvs 300	N4420	7-121
C/VXF40.100-124	3-port seat valve, flanged, PN16, DN100, kvs 124	N4430	7-124
C/VXF40.100-160	3-port seat valve, flanged, PN16, DN100, kvs 160	N4430	7-124
C/VXF40.125-200	3-port seat valve, flanged, PN16, DN125, kvs 200	N4430	7-124
C/VXF40.125-250	3-port seat valve, flanged, PN16, DN125, kvs 250	N4430	7-124
C/VXF40.15-1.9	3-port seat valve, flanged, PN16, DN15, kvs 1.9	N4430	7-124
C/VXF40.150-300	3-port seat valve, flanged, PN16, DN150, kvs 300	N4430	7-124
C/VXF40.150-315	3-port seat valve, flanged, PN16, DN150, kvs 315	N4430	7-124
C/VXF40.25-10	3-port seat valve, flanged, PN16, DN25, kvs 10	N4430	7-124
C/VXF40.25-5	3-port seat valve, flanged, PN16, DN25, kvs 5	N4430	7-124
C/VXF40.25-6.3	3-port seat valve, flanged, PN16, DN25, kvs 6.3	N4430	7-124
C/VXF40.25-7.5	3-port seat valve, flanged, PN16, DN25, kvs 7.5	N4430	7-124
C/VXF40.40-12	3-port seat valve, flanged, PN16, DN40, kvs 12	N4430	7-124
C/VXF40.40-16	3-port seat valve, flanged, PN16, DN40, kvs 16	N4430	7-124
C/VXF40.40-19	3-port seat valve, flanged, PN16, DN40, kvs 19	N4430	7-124
C/VXF40.40-25	3-port seat valve, flanged, PN16, DN40, kvs 25	N4430	7-124
C/VXF40.50-31	3-port seat valve, flanged, PN16, DN50, kvs 31	N4430	7-124
C/VXF40.50-40	3-port seat valve, flanged, PN16, DN50, kvs 40	N4430	7-124
C/VXF40.65-49	3-port seat valve, flanged, PN16, DN65, kvs 49	N4430	7-124
C/VXF40.65-63	3-port seat valve, flanged, PN16, DN65, kvs 63	N4430	7-124
C/VXF40.80-100	3-port seat valve, flanged, PN16, DN80, kvs 100	N4430	7-124
C/VXF40.80-78	3-port seat valve, flanged, PN16, DN80, kvs 78	N4430	7-124
C/VXI41.15-2.5	3-port valve, internal thread, PN16, DN15, kvs 2.5	N4362	7-146
C/VXI41.15-4	3-port valve, internal thread, PN16, DN15, kvs 4	N4362	7-146
C/VXI41.20-6.3	3-port valve, internal thread, PN16, DN20, kvs 6.3	N4362	7-146
C/VXI41.25-10	3-port valve, internal thread, PN16, DN25, kvs 10	N4362	7-146
C/VXI41.32-16	3-port valve, internal thread, PN16, DN32, kvs 16	N4362	7-146

Type Overview

Product Number	Description	Datasheet	Page
C/VXI41.40-25	3-port valve, internal thread, PN16, DN40, kvs 25	N4362	7-146
C/VXI41.50-40	3-port valve, internal thread, PN16, DN50, kvs 40	N4362	7-146
CU230P-2 BT	G120P Control Unit, USS, Modb, BacNet		9-10
CU230P-2 CAN	G120P Control Unit, CanOpen		9-10
CU230P-2 DP	G120P Control Unit, Profibus		9-10
ERF910	RF repeater	N2704	4-17
FBCRAA/KS	Backup battery for WT..16..	N2870	10-28
FGT-PT1000	Flue gas temperature sensor Pt1000	N1846	6-18
FK-PZ1	Air duct probe for simple, quick and airtight mounting	N1589	6-42
FK-PZ2	Air duct probe for accurate measurements	N1589	6-42
FK-PZ3	Air duct probe for differential pressure sensor, fixed length	N1589	6-42
FK-TP/200	Duct temperature sensor Pt100, for high temperature	N1778	6-10
FKA0003	Clamping piece (threaded hoop 17 mm)	N2886	10-11
FKA0004	Expanding bracket of lamella-type radiator	N2886	10-11
FKA0008	Clamping piece (threaded hoop 18...30 mm)	N2886	10-11
FKA0009	Installation plate for remote sensor	N2886	10-11
FKA0010	Contact screw	N2886	10-11
FKA0011	Contact screw long	N2886	10-11
FKA0012	Threaded bushing	N2886	10-11
FKA0013	Spacer	N2886	10-11
FKA0017	Mounting plate (P3)	N2886	10-11
FKA0022	Mounting plate wide	N2886	10-11
FKK0029	Sensor housing	N2886	10-11
FKK0034	Snap-on panel	N2886	10-12
FKK0041	Lead seal blue	N2886	10-12
FKK0044	Wall bracket (P3)	N2886	10-11
FKK0045	Safety cap for sensor housing	N2886	10-11
FKM0002	Clamping sleeve special radiator	N2886	10-11
FKT0004	Threaded hoop (pipe up to 17 mm)	N2886	10-11
FKT0009	Clamping bracket shortened	N2886	10-11
FKT0010	Spacer sleeve	N2886	10-11
FKT0011	Welding stud M3 x 12 mm	N2886	10-12
FKT0012	Welding stud M3 x 15 mm	N2886	10-12
FKT0013	Welding stud M3 x 8 mm	N2886	10-12
FKT0014	Threaded hoop (pipe 18...30 mm)	N2886	10-11
FKT0015	Clamping bracket (pipes TE 36 mm)	N2886	10-11
FKT0016	Clamping bracket (pipes TE 46 mm)	N2886	10-11
FKT0017	Installation aid (convector)	N2886	10-12
FKT0018	Clamping bracket trapezoidal 35 mm	N2886	10-11
FKT0019	Clamping bracket trapezoidal 50 mm	N2886	10-11
FKT0020	Clamping bracket trapezoidal 65 mm	N2886	10-11
FNM0001	Shank nut M3 x 9.5 mm	N2886	10-11
FNM0002	Shank nut M3 x 3 mm	N2886	10-11
FNM0003	Shank nut M3 x 6 mm	N2886	10-11
FNM0004	Hexagon nut M4	N2886	10-12
FNM0005	Self-locking nut with serrated bearing M3	N2886	10-12
FNR0003	Cross-slot screw M4 x 30 mm	N2886	10-12
FNR0004	Cross-slot screw M4 x 40 mm	N2886	10-12
FNR0005	Cross-slot screw M4 x 50 mm	N2886	10-12
FNR0006	Cross-slot screw M4 x 70 mm	N2886	10-12
FNR0007	Screw B 3.9 x 45 mm	N2886	10-12
FNR0008	Self-tapping screw B 2.9 x 13 mm	N2886	10-12
FNU0001	Dowel 6 mm	N2886	10-12
FOZ0001	Cable duct white	N2886	10-12
FSS0007	ERGO universal instant glue 3g	N2886	10-12
FT-PZ1	Connection set, thread ½" for pressure sensor for refrigerant	N1907	6-52
FT-TP/100	Immersion temperature sensor 100 mm, Pt100, -100...450°C, direct immersion	N1797	6-15

NEW PRODUCT

Type Overview

Product Number	Description	Datasheet	Page
FT-TP/400	Immersion temperature sensor 400 mm, Pt100, direct immersion	N1797	6-15
FZ201-009	Torque Screwdriver, Torx Plus™		10-26
G120P-0.37/32A	Variable Speed Drive G120P, FSA, IP20, Filter A, 0.37 kW	N5111	9-9
G120P-0.37/32B	Variable Speed Drive G120P, FSA, IP20, Filter B, 0.37 kW	N5111	9-8
G120P-0.37/35A	Variable Speed Drive G120P, FSA, IP55, Filter A, 0.37 kW	N5111	9-7
G120P-0.37/35B	Variable Speed Drive G120P, FSA, IP55, Filter B, 0.37 kW	N5111	9-6
G120P-0.55/32A	Variable Speed Drive G120P, FSA, IP20, Filter A, 0.55 kW	N5111	9-9
G120P-0.55/32B	Variable Speed Drive G120P, FSA, IP20, Filter B, 5.5 kW	N5111	9-8
G120P-0.55/35A	Variable Speed Drive G120P, FSA, IP55, Filter A, 0.55 kW	N5111	9-7
G120P-0.55/35B	Variable Speed Drive G120P, FSA, IP55, Filter B, 0.55 kW	N5111	9-6
G120P-0.75/32A	Variable Speed Drive G120P, FSA, IP20, Filter A, 0.75 kW	N5111	9-9
G120P-0.75/32B	Variable Speed Drive G120P, FSA, IP20, Filter B, 0.75 kW	N5111	9-8
G120P-0.75/35A	Variable Speed Drive G120P, FSA, IP55, Filter A, 0.75 kW	N5111	9-7
G120P-0.75/35B	Variable Speed Drive G120P, FSA, IP55, Filter B, 0.75 kW	N5111	9-6
G120P-1.1/32A	Variable Speed Drive G120P, FSA, IP20, Filter A, 1.1 kW	N5111	9-9
G120P-1.1/32B	Variable Speed Drive G120P, FSA, IP20, Filter B, 1.1 kW	N5111	9-8
G120P-1.1/35A	Variable Speed Drive G120P, FSA, IP55, Filter A, 1.1 kW	N5111	9-7
G120P-1.1/35B	Variable Speed Drive G120P, FSA, IP55, Filter B, 1.1 kW	N5111	9-6
G120P-1.5/32A	Variable Speed Drive G120P, FSA, IP20, Filter A, 1.5 kW	N5111	9-9
G120P-1.5/32B	Variable Speed Drive G120P, FSA, IP20, Filter B, 1.5 kW	N5111	9-8
G120P-1.5/35A	Variable Speed Drive G120P, FSA, IP55, Filter A, 1.5 kW	N5111	9-7
G120P-1.5/35B	Variable Speed Drive G120P, FSA, IP55, Filter B, 1.5 kW	N5111	9-6
G120P-11/32A	Variable Speed Drive G120P, FSC, IP20, Filter A, 11 kW	N5111	9-9
G120P-11/32B	Variable Speed Drive for pumps and fans	N5111	9-8
G120P-11/35A	Variable Speed Drive G120P, FSC, IP55, Filter A, 11 kW	N5111	9-7
G120P-11/35B	Variable Speed Drive G120P, FSC, IP55, Filter B, 11 kW	N5111	9-6
G120P-15/32A	Variable Speed Drive G120P, FSC, IP20, Filter A, 15 kW	N5111	9-9
G120P-15/32B	Variable Speed Drive G120P, FSC, IP20, Filter B, 15 kW	N5111	9-8
G120P-15/35A	Variable Speed Drive G120P, FSC, IP55, Filter A, 15 kW	N5111	9-7
G120P-15/35B	Variable Speed Drive G120P, FSC, IP55, Filter B, 15 kW	N5111	9-6
G120P-18.5/32A	Variable Speed Drive G120P, FSC, IP20, Filter A, 18.5 kW	N5111	9-9
G120P-18.5/32B	Variable Speed Drive G120P, FSD, IP20, Filter B, 18.5 kW	N5111	9-8
G120P-18.5/35A	Variable Speed Drive G120P, FSC, IP55, Filter A, 18.5 kW	N5111	9-7
G120P-18.5/35B	Variable Speed Drive G120P, FSD, IP55, Filter B, 18.5 kW	N5111	9-6
G120P-2.2/32A	Variable Speed Drive G120P, FSA, IP20, Filter A, 2.2 kW	N5111	9-9
G120P-2.2/32B	Variable Speed Drive G120P, FSA, IP20, Filter B, 2.2 kW	N5111	9-8
G120P-2.2/35A	Variable Speed Drive G120P, FSA, IP55, Filter A, 2.2 kW	N5111	9-7
G120P-2.2/35B	Variable Speed Drive G120P, FSA, IP55, Filter B, 2.2 kW	N5111	9-6
G120P-22/32A	Variable Speed Drive G120P, FSD, IP20, Filter A, 22 kW	N5111	9-9
G120P-22/32B	Variable Speed Drive G120P, FSD, IP20, Filter B, 22 kW	N5111	9-8
G120P-22/35A	Variable Speed Drive G120P, FSD, IP55, Filter A, 22 kW	N5111	9-7
G120P-22/35B	Variable Speed Drive G120P, FSD, IP55, Filter B, 22 kW	N5111	9-6
G120P-3/32A	Variable Speed Drive G120P, FSA, IP20, Filter A, 3 kW	N5111	9-9
G120P-3/32B	Variable Speed Drive G120P, FSA, IP20, Filter B, 3 kW	N5111	9-8
G120P-3/35A	Variable Speed Drive G120P, FSA, IP55, Filter A, 3 kW	N5111	9-7
G120P-3/35B	Variable Speed Drive G120P, FSA, IP55, Filter B, 3 kW	N5111	9-6
G120P-30/32A	Variable Speed Drive G120P, FSD, IP20, Filter A, 30 kW	N5111	9-9
G120P-30/32B	Variable Speed Drive G120P, FSD, IP20, Filter B, 30 kW	N5111	9-8
G120P-30/35A	Variable Speed Drive G120P, FSD, IP55, Filter A, 30 kW	N5111	9-7
G120P-30/35B	Variable Speed Drive G120P, FSD, IP55, Filter B, 30 kW	N5111	9-6
G120P-37/32A	Variable Speed Drive G120P, FSE, IP20, Filter A, 37 kW	N5111	9-9
G120P-37/32B	Variable Speed Drive G120P, FSE, IP20, Filter B, 37 kW	N5111	9-8
G120P-37/35A	Variable Speed Drive G120P, FSE, IP55, Filter A, 37 kW	N5111	9-7
G120P-37/35B	Variable Speed Drive G120P, FSE, IP55, Filter B, 37 kW	N5111	9-6
G120P-4/32A	Variable Speed Drive G120P, FSB, IP20, Filter A, 4 kW	N5111	9-9
G120P-4/32B	Variable Speed Drive G120P, FSB, IP20, Filter B, 4 kW	N5111	9-8
G120P-4/35A	Variable Speed Drive G120P, FSB, IP55, Filter A, 4 kW	N5111	9-7

NEW PRODUCT

Type Overview

Product Number	Description	Datasheet	Page
G120P-4/35B	Variable Speed Drive G120P, FSB, IP55, Filter B, 4 kW	N5111	9-6
G120P-45/32A	Variable Speed Drive G120P, FSE, IP20, Filter A, 45 kW	N5111	9-9
G120P-45/32B	Variable Speed Drive G120P, FSE, IP20, Filter B, 45 kW	N5111	9-8
G120P-45/35A	Variable Speed Drive G120P, FSE, IP55, Filter A, 45 kW	N5111	9-7
G120P-45/35B	Variable Speed Drive G120P, FSE, IP55, Filter B, 45 kW	N5111	9-6
G120P-5.5/32A	Variable Speed Drive G120P, FSB, IP20, Filter A, 5.5 kW	N5111	9-9
G120P-5.5/32B	Variable Speed Drive G120P, FSB, IP20, Filter B, 5.5 kW	N5111	9-8
G120P-5.5/35A	Variable Speed Drive G120P, FSB, IP55, Filter A, 5.5 kW	N5111	9-7
G120P-5.5/35B	Variable Speed Drive G120P, FSB, IP55, Filter B, 5.5 kW	N5111	9-6
G120P-55/32A	Variable Speed Drive G120P, FSF, IP20, Filter A, 55 kW	N5111	9-9
G120P-55/32B	Variable Speed Drive G120P, FSF, IP20, Filter B, 55 kW	N5111	9-8
G120P-55/35A	Variable Speed Drive G120P, FSF, IP55, Filter A, 55 kW	N5111	9-7
G120P-55/35B	Variable Speed Drive G120P, FSF, IP55, Filter B, 55 kW	N5111	9-6
G120P-7.5/32A	Variable Speed Drive G120P, FSB, IP20, Filter A, 7.5 kW	N5111	9-9
G120P-7.5/32B	Variable Speed Drive G120P, FSB, IP20, Filter B, 7.5 kW	N5111	9-8
G120P-7.5/35A	Variable Speed Drive G120P, FSB, IP55, Filter A, 7.5 kW	N5111	9-7
G120P-7.5/35B	Variable Speed Drive G120P, FSB, IP55, Filter B, 7.5 kW	N5111	9-6
G120P-75/32A	Variable Speed Drive G120P, FSF, IP20, Filter A, 75 kW	N5111	9-9
G120P-75/32B	Variable Speed Drive G120P, FSF, IP20, Filter B, 75 kW	N5111	9-8
G120P-75/35A	Variable Speed Drive G120P, FSF, IP55, Filter A, 75 kW	N5111	9-7
G120P-75/35B	Variable Speed Drive G120P, FSF, IP55, Filter B, 75 kW	N5111	9-6
G120P-90/35A	Variable Speed Drive G120P, FSF, IP55, Filter A, 90 kW	N5111	9-7
G120P-90/35B	Variable Speed Drive G120P, FSF, IP55, Filter B, 90 kW	N5111	9-6
G120P-BCOVER	G120P blanking cover, IP55		9-9
G120P-BOP-2	G120P basic operator panel BOP-2, IP55	N5116	9-9
G120P-CUScreen	G120P CU230P-2 Screening Kit		9-10
G120P-DOOR-KIT	G120P Door mounting kit for IOP or BOP-2		9-10
G120P-FExtFSA	G120P PM Fan IP20/IP55, external, FSA		9-10
G120P-FExtFSB	G120P PM Fan IP20/IP55, external, FSB		9-10
G120P-FExtFSC	G120P PM Fan IP20/IP55, external, FSC		9-10
G120P-FExtFSDE-IP20	G120P PM Fan IP55, external, FSD-FSE		9-10
G120P-FExtFSDE-IP55	G120P PM Fan IP55, external, FSD-FSE		9-10
G120P-FExtFSF-IP20	G120P PM Fan IP55, external, FSF		9-10
G120P-FExtFSF-IP55	G120P PM Fan IP55, external, FSF		9-10
G120P-FIntFSAC-IP55	G120P PM Fan IP55, internal, FSA-FSC		9-10
G120P-FIntFSDF-IP55	G120P PM Fan IP55, internal, FSD-FSF		9-10
G120P-IOP	G120P intelligent operator panel IOP, IP54	N5116	9-9
G120P-MMC-Card	Sinamics Micro Memory Card (MMC)		9-10
G120P-MSetFSA-IP55	G120P mounting parts set, PM230, IP55, FSA		9-10
G120P-MSetFSB-IP55	G120P mounting parts set, PM230, IP55, FSB		9-10
G120P-MSetFSC-IP55	G120P mounting parts set, PM230, IP55, FSC		9-10
G120P-MSetFSD-IP55	G120P mounting parts set, PM230, IP55, FSD		9-10
G120P-MSetFSE-IP55	G120P mounting parts set, PM230, IP55, FSE		9-10
G120P-MSetFSF-IP55	G120P mounting parts set, PM230, IP55, FSF		9-10
G120P-PC-Kit	G120P PC-Inverter Connection Kit-2		9-10
G120P-Screen-FSA	G120P Screening-Kit, PM230 IP20 FSA		9-10
G120P-Screen-FSB	G120P Screening-Kit, PM230 IP20 FSB		9-10
G120P-Screen-FSC	G120P Screening-Kit, PM230 IP20 FSC		9-10
G120P-Screen-FSDE	G120P Screening-Kit, PM230 IP20 FSD-FSE		9-10
G120P-Screen-FSF	G120P Screening-Kit, PM230 IP20 FSF		9-10
G120P-Starter	STARTER Commissioning Tool for Sinamics and Micromaster Drives		9-10
GAP191.1E	Rotary air damper actuator, AC/DC 24 V, 6 Nm, DC 0(2)...10 V / 0(4)...20 mA, without electronic fail-save function	N4608	8-21
GAP196.1E	Rotary air damper actuator, AC/DC 24 V, 6 Nm, DC 0(2)...10 V / 0(4)...20 mA, with electronic fail-save function, 2 switches	N4608	8-21
GBB131.1E	Damper actuator 3-position, 24 V, rotary actuator 25 Nm, 150 s	N4626	7-182
GBB131.2E	Damper actuator 3-position, 24 V, stroke actuator 550 N, 150 s	N4656	8-25

NEW PRODUCT

Type Overview

Product Number	Description	Datasheet	Page
GBB135.1E	Rotary air damper actuator 3-position, 24 V, 25 Nm, 150 s, 2 switches, potentiometer	N4626	8-16
GBB135.2E	Damper actuator 3-position, 24 V, stroke actuator 550 N, 150 s, 2 switches, potentiometer	N4656	8-25
GBB136.1E	Rotary air damper actuator 3-position, 24 V, 25 Nm, 150 s, 2 switches	N4626	8-16
GBB136.2E	Damper actuator 3-position, 24 V, stroke actuator 550 N, 150 s, 2 switches	N4656	8-25
GBB161.1E	Rotary air damper actuator 24 V / DC 0...10 V, 25 Nm, 150 s	N4626	7-182
GBB161.2E	Damper actuator 24 V / 0...10 V, stroke actuator 550 N, 150 s, potentiometer	N4656	8-25
GBB163.1E	Rotary air damper actuator 24 V / DC 0...35 V, adjustable, 25 Nm, 150 s	N4626	8-16
GBB163.2E	Damper actuator 24 V / 0...35 V, adjustable, stroke actuator 550 N, 150 s, potentiometer	N4656	8-25
GBB164.1E	Rotary air damper actuator 24 V / DC 0...35 V, adjustable, 25 Nm, 150 s, 2 switches	N4626	8-16
GBB164.2E	Damper actuator 24 V / DC 0...35 V adjustable, stroke actuator 550 N, 150 s, 2 switches, potentiometer	N4656	8-25
GBB166.1E	Rotary air damper actuator 24 V / DC 0...10 V, 25 Nm, 150 s, 2 switches	N4626	8-16
GBB166.2E	Damper actuator 24 V / DC 0...10 V, stroke actuator 550 N, 150 s, 2 switches, potentiometer	N4656	8-25
GBB331.1E	Rotary air damper actuator 3-position, 230 V, 25 Nm, 150 s	N4626	7-182
GBB331.2E	Damper actuator 3-position, 230 V, stroke actuator 550 N, 150 s	N4656	8-25
GBB335.1E	Rotary air damper actuator 3-position, 230 V, 25 Nm, 150 s, 2 switches, potentiometer	N4626	8-16
GBB335.2E	Damper actuator 3-position, 230 V, stroke actuator 550 N, 150 s, 2 switches, potentiometer	N4656	8-25
GBB336.1E	Rotary air damper actuator 3-position, 230 V, 25 Nm, 150 s, 2 switches	N4626	8-16
GBB336.2E	Damper actuator 3-position, 230 V, stroke actuator 550 N, 150 s, 2 switches	N4656	8-25
GCA121.1E	Rotary air damper actuator 2-position, AC/DC 24 V, 18 Nm, spring return 90/15 s	N4613	8-10
GCA126.1E	Rotary air damper actuator 2-position, AC/DC 24 V, 18 Nm, spring return 90/15 s, 2 switches	N4613	8-10
GCA131.1E	Rotary air damper actuator 3-position, AC/DC 24 V, 18 Nm, spring return 90/15 s	N4613	8-10
GCA135.1E	Rotary air damper actuator 3-position, AC/DC 24 V, 18 Nm, spring return 90/15 s, 2 switches, potentiometer	N4613	8-10
GCA161.1E	Rotary air damper actuator AC/DC 24 V / DC 0...10 V, 18 Nm, spring return 90/15 s, potentiometer	N4613	8-10
GCA163.1E	Rotary air damper actuator AC/DC 24 V / DC 0...35 V adjustable, 18 Nm, spring return 90/15 s, potentiometer	N4613	8-10
GCA164.1E	Rotary air damper actuator AC/DC 24 V / DC 0...35 V adjustable, 18 Nm, spring return 90/15 s, 2 switches, potentiometer	N4613	8-10
GCA166.1E	Rotary air damper actuator AC/DC 24 V / DC 0...10 V, 18 Nm, spring return 90/15 s, 2 switches, potentiometer	N4613	8-10
GCA321.1E	Rotary air damper actuator 2-position, 230 V, 18 Nm, spring return 90/15 s	N4613	8-10
GCA326.1E	Rotary air damper actuator 2-position, 230 V, 18 Nm, spring return 90/15 s, 2 switches	N4613	8-10
GDB131.1E	Rotary air damper actuator 3-position, 24 V, 5 Nm, 150 s	N4634	8-13
GDB131.2E	Damper actuator 3-position, 24 V, stroke actuator 125 Nm, 150 s	N4664	8-22
GDB131.9E	Rotary actuator for ball valves, non-spring return, AC 24 V, 3-position, 5 Nm, 150 s	N4657	7-172
GDB132.1E	Rotary air damper actuator 3-position, AC 24 V, 5 Nm, 150 s, potentiometer	N4634	8-13
GDB132.2E	Damper actuator 3-position, 24 V, stroke actuator 125 N, 150 s, potentiometer	N4664	8-22
GDB136.1E	Rotary air damper actuator 3-position, 24 V, 5 Nm, 150 s, 2 switches	N4634	8-13
GDB136.2E	Damper actuator 3-position, 24 V, stroke actuator 125 N, 150 s, 2 switches	N4664	8-22
GDB161.1E	Rotary air damper actuator 24 V / DC 0...10 V, 5 Nm, 150 s	N4634	8-13
GDB161.2E	Damper actuator 24 V / 0...10 V, stroke actuator 125 N, 150 s, potentiometer	N4664	8-22
GDB161.9E	Rotary actuator for ball valves, non-spring return, AC 24 V, DC 0...10 V, 5 Nm, 150 s	N4657	7-172
GDB163.1E	Rotary air damper actuator 24 V / DC 0...35 V adjustable, 5 Nm, 150 s	N4634	8-13
GDB163.2E	Damper actuator 24 V / DC 0...35 V adjustable, stroke actuator 125 N, 150 s, potentiometer	N4664	8-22
GDB164.1E	Rotary air damper actuator 24 V / DC 0...35 V adjustable, 5 Nm, 150 s, 2 switches	N4634	8-13
GDB164.2E	Damper actuator 24 V / DC 0...35 V adjustable, stroke actuator 125 N, 150 s, 2 switches, potentiometer	N4664	8-22
GDB166.1E	Rotary air damper actuator 24 V / DC 0...10 V, 5 Nm, 150 s, 2 switches	N4634	8-13
GDB166.2E	Damper actuator 24 V / DC 0...10 V, stroke actuator 125 N, 150 s, 2 switches, potentiometer	N4664	8-22

NEW PRODUCT

Type Overview

Product Number	Description	Datasheet	Page
GDB181.1E/3	VAV compact controller, 24 V, 5 Nm, 150 s, 300 Pa, 0...10 V / 3-position	N3544	8-29
GDB181.1E/KN	VAV compact controller KNX/PL-Link, 24 V, 5 Nm, 150 s, 300 Pa	N3547	8-28
GDB331.1E	Rotary air damper actuator 3-position , 230 V, 5 Nm, 150 s	N4634	8-13
GDB331.2E	Damper actuator 3-position, 230 V, stroke actuator 125 N, 150 s	N4664	8-22
GDB331.9E	Rotary actuator for ball valves, non-spring return, AC 230 V, 3-position, 5 Nm, 150 s	N4657	7-172
GDB332.1E	Rotary air damper actuator 3-position, 230 V, 5 Nm, 150 s, potentiometer	N4634	8-13
GDB332.2E	Damper actuator 3-position, 230 V, stroke actuator 125 N, 150 s, potentiometer	N4664	8-22
GDB336.1E	Rotary air damper actuator 3-position, 230 V, 5 Nm, 150 s, 2 switches	N4634	8-13
GDB336.2E	Damper actuator 3-position, 230 V, stroke actuator 125 N, 150 s, 2 switches	N4664	8-22
GEB131.1E	Damper actuator 3-position, 24 V, rotary actuator 15 Nm, 150 s	N4621	8-15
GEB131.2E	Damper actuator 3-position, 24 V, stroke actuator 400 N, 150 s	N4653	8-24
GEB132.1E	Rotary air damper actuator 3-position, 24 V, 15 Nm, 150 s, potentiometer	N4621	8-15
GEB132.2E	Damper actuator 3-position, 24 V, stroke actuator 400 N, 150 s, potentiometer	N4653	8-24
GEB136.1E	Rotary air damper actuator 3-position, 24 V, 15 Nm, 2 switches	N4621	8-15
GEB136.2E	Damper actuator 3-position, 24 V, stroke actuator 400 N, 150 s, 2 switches	N4653	8-24
GEB161.1E	Rotary air damper actuator 24 V / DC 0...10 V, 15 Nm, 150 s	N4621	8-15
GEB161.2E	Damper actuator 24 V / 0...10 V, stroke actuator 400 N, 150 s, potentiometer	N4653	8-24
GEB163.1E	Rotary air damper actuator 24 V / DC 0...35 V, adjustable, 15 Nm, 150 s	N4621	8-15
GEB163.2E	Damper actuator 24 V / DC 0...35 V, adjustable, stroke actuator 400 N, 150 s, potentiometer	N4653	8-24
GEB164.1E	Rotary air damper actuator 24 V / DC 0...35 V, 15 Nm, 150 s, 2 switches	N4621	8-15
GEB164.2E	Damper actuator 24 V / DC 0...35 V, stroke actuator 400 N, 150 s, 2 switches, potentiometer	N4653	8-24
GEB166.1E	Rotary air damper actuator 24 V / DC 0...10 V, 15 Nm, 150 s, 2 switches	N4621	8-15
GEB166.2E	Damper actuator 24 V / 0...10 V, stroke actuator 400 N, 150 s, 2 switches, potentiometer	N4653	8-24
GEB331.1E	Rotary air damper actuator 3-position, 230 V, 15 Nm, 150 s	N4621	8-15
GEB331.2E	Damper actuator 3-position, 230 V, stroke actuator 400 N, 150 s	N4653	8-24
GEB332.1E	Damper actuator 3-position, 230 V, rotary actuator 15 Nm, 150 s, potentiometer	N4621	8-15
GEB332.2E	Damper actuator 3-position, 230 V, stroke actuator 400 N, 150 s, potentiometer	N4653	8-24
GEB336.1E	Damper actuator 3-position, 230 V, rotary actuator 15 Nm, 150 s, 2 switches	N4621	8-15
GEB336.2E	Damper actuator 3-position, 230 V, stroke actuator 400 N, 150 s, 2 switches	N4653	8-24
GGA126.1E/08	Actuator for fire protection dampers 2-position, AC 24 V, rotary actuator 18 Nm with spring return 90/15 s, 2 switches, Axis 8x8 mm	N4617	8-33
GGA126.1E/10	Actuator for fire protection dampers 2-position, AC 24 V, rotary actuator 18 Nm with spring return 90/15 s, 2 switches, Axis 10x10 mm	N4617	8-33
GGA126.1E/12	Actuator for fire protection dampers 2-position, AC 24 V, rotary actuator 18 Nm with spring return 90/15 s, 2 switches, Axis 12x12 mm	N4617	8-33
GGA126.1E/15	Actuator for fire protection dampers 2-position, AC 24 V, rotary actuator 18 Nm with spring return 90/15 s, 2 switches, Axis 15x15 mm	N4617	8-33
GGA126.1E/T08	Actuator for fire protection dampers 2-position, AC 24 V, rotary actuator 18 Nm with spring return 90/15 s, 2 switches, Axis 8x8 mm, with thermoelement	N4617	8-33
GGA126.1E/T10	Actuator for fire protection dampers 2-position, AC 24 V, rotary actuator 18 Nm with spring return 90/15 s, 2 switches, Axis 10x10 mm, with thermoelement	N4617	8-33
GGA126.1E/T12	Actuator for fire protection dampers 2-position, AC 24 V, rotary actuator 18 Nm with spring return 90/15 s, 2 switches, Axis 12x12 mm, with thermoelement	N4617	8-33
GGA126.1E/T15	Actuator for fire protection dampers 2-position, AC 24 V, rotary actuator 18 Nm with spring return 90/15 s, 2 switches, Axis 15x15 mm, with thermoelement	N4617	8-33
GGA326.1E/08	Actuator for fire protection dampers 2-position, AC 230 V, rotary actuator 18 Nm with spring return 90/15 s, 2 switches, Axis 8x8 mm	N4617	8-34
GGA326.1E/10	Actuator for fire protection dampers 2-position, AC 230 V, rotary actuator 18 Nm with spring return 90/15 s, 2 switches, Axis 10x10 mm	N4617	8-34
GGA326.1E/12	Actuator for fire protection dampers 2-position, AC 230 V, rotary actuator 18 Nm with spring return 90/15 s, 2 switches, Axis 12x12 mm	N4617	8-34
GGA326.1E/15	Actuator for fire protection dampers 2-position, AC 230 V, rotary actuator 18 Nm with spring return 90/15 s, 2 switches, Axis 15x15 mm	N4617	8-34
GGA326.1E/T08	Actuator for fire protection dampers 2-position, AC 230 V, rotary actuator 18 Nm with spring return 90/15 s, 2 switches, Axis 8x8 mm, with thermoelement	N4617	8-34
GGA326.1E/T10	Actuator for fire protection dampers 2-position, AC 230 V, rotary actuator 18 Nm with spring return 90/15 s, 2 switches, Axis 10x10 mm, with thermoelement	N4617	8-34

NEW PRODUCT

Type Overview

Product Number	Description	Datasheet	Page
GGA326.1E/T12	Actuator for fire protection dampers 2-position, AC 230 V, rotary actuator 18 Nm with spring return 90/15 s, 2 switches, Axis 12x12 mm, with thermoelement	N4617	8-34
GGA326.1E/T15	Actuator for fire protection dampers 2-position, AC 230 V, rotary actuator 18 Nm with spring return 90/15 s, 2 switches, Axis 15x15 mm	N4617	8-34
GGD121.1U	Spring Return, 142 lb-in (16 Nm), 24 Vac/dc, 2-position Control, 15 sec Run, Fire/Smoke	152-046P25	8-39
GGD321.1U	Spring Return, 142 lb-in (16 Nm), 230 Vac, 2-position Control, 15 sec Run, Fire/Smoke	152-046P25	8-39
GHD131.2E	Linear air damper actuator 150 N without spindle	N4689	8-26
GHD131.2E/130	Linear air damper actuator 150 N, spindle 130 mm	N4689	8-26
GHD131.2E/180	Linear air damper actuator 150 N, spindle 180 mm	N4689	8-26
GHD131.2E/230	Linear air damper actuator 150 N, spindle 230 mm	N4689	8-26
GHD131.2E/300	Linear air damper actuator 150 N, spindle 300 mm	N4689	8-26
GIB131.1E	Rotary air damper actuator 3-position, 24 V, 35 Nm, 150 s	N4626	7-182
GIB135.1E	Rotary air damper actuator 3-position, 24 V, 35 Nm, 150 s, 2 switches, potentiometer	N4626	8-17
GIB136.1E	Rotary air damper actuator 3-position, 24 V, 35 Nm, 150 s, 2 switches	N4626	8-17
GIB161.1E	Rotary air damper actuator 24 V / DC 0...10 V, 35 Nm, 150 s	N4626	7-182
GIB163.1E	Rotary air damper actuator AC 24 V / DC 0...35 V adjustable, 35 Nm, 150 s	N4626	8-17
GIB164.1E	Rotary air damper actuator 24 V / DC 0...35 V adjustable, 35 Nm, 150 s, 2 switches	N4626	8-17
GIB166.1E	Rotary air damper actuator AC 24 V / DC 0...10 V, 35 Nm, 150 s, 2 switches, potentiometer	N4626	8-17
GIB331.1E	Rotary air damper actuator 3-position, 230 V, 35 Nm, 150 s	N4626	7-182
GIB335.1E	Rotary air damper actuator 3-position , 230 V, 35 Nm, 150 s, 2 switches potentiometer	N4626	8-17
GIB336.1E	Rotary air damper actuator 3-position, 230 V, 35 Nm, 150 s, 2 switches	N4626	8-17
GLB131.1E	Damper actuator 3-position, 24 V, rotary actuator 10 Nm, 150 s	N4634	8-14
GLB131.2E	Damper actuator 3-position, 24 V, stroke actuator 250 Nm, 150 s	N4664	8-23
GLB131.9E	Rotary actuator for ball valves, non-spring return, AC 24 V, 3-position, 10 Nm, 150 s	N4657	7-174
GLB132.1E	Rotary air damper actuator 3-position, 24 V, 10 Nm, 150 s, potentiometer	N4634	8-14
GLB132.2E	Damper actuator 3-position, 24 V, stroke actuator 250 N, 150 s, potentiometer	N4664	8-23
GLB136.1E	Rotary air damper actuator 3-position, 24 V, 10 Nm, 150 s, 2 switches	N4634	8-14
GLB136.2E	Damper actuator 3-position, 24 V, stroke actuator 250 N, 150 s, 2 switches	N4664	8-23
GLB161.1E	Rotary air damper actuator 24 V / DC 0...10 V, 10 Nm, 150 s	N4634	8-14
GLB161.2E	Damper actuator 24 V / 0...10 V, stroke actuator 250 N, 150 s, potentiometer	N4664	8-23
GLB161.9E	Rotary actuator for ball valves, non-spring return, AC 24 V, DC 0...10 V, 10 Nm, 150 s	N4657	7-174
GLB163.1E	Rotary air damper actuator 24 V / DC 0...35 V adjustable, 10 Nm, 150 s	N4634	8-14
GLB163.2E	Damper actuator 24 V / DC 0...35 V adjustable, stroke actuator 250 N, 150 s, potentiometer	N4664	8-23
GLB164.1E	Rotary air damper actuator 24 V / DC 0...35 V adjustable, 10 N, 150 s, 2 switches	N4634	8-14
GLB164.2E	Damper actuator 24 V / DC 0...35 V adjustable, stroke actuator 250 N, 150 s, 2 switches, potentiometer	N4664	8-23
GLB166.1E	Rotary air damper actuator 24 V / DC 0...10 V, 10 Nm, 150 s, 2 switches	N4634	8-14
GLB166.2E	Damper actuator 24 V / DC 0...10 V, stroke actuator 250 N, 150 s, 2 switches, potentiometer	N4664	8-23
GLB181.1E/3	VAV compact controller, 24 V, 10 Nm, 150 s, 300 Pa, 0...10 V / 3-position	N3544	8-28
GLB181.1E/KN	VAV compact controller KNX/PL-Link, 24 V, 10 Nm, 150 s, 300 Pa	N3547	8-28
GLB331.1E	Rotary air damper actuator 3-position, 230 V, 10 Nm, 150 s	N4634	8-14
GLB331.2E	Damper actuator 3-position, 230 V, stroke actuator 250 N, 150 s	N4664	8-23
GLB331.9E	Rotary actuator for ball valves, non-spring return, AC 230 V, 3-position, 10 Nm, 150 s	N4657	7-174
GLB332.1E	Rotary air damper actuator 3-position, 230 V, 10 Nm, 150 s, potentiometer	N4634	8-14
GLB332.2E	Damper actuator 3-position, 230 V, stroke actuator 250 N, 150 s, potentiometer	N4664	8-23
GLB336.1E	Rotary air damper actuator 3-position, 230 V, 10 Nm, 150 s, 2 switches	N4634	8-14
GLB336.2E	Damper actuator 3-position, 230 V, stroke actuator 250 N, 150 s, 2 switches	N4664	8-23
GMA121.1E	Rotary air damper actuator 2-position, AC/DC 24 V, 7 Nm with spring return 90/15 s	N4614	8-9
GMA126.1E	Rotary air damper actuator 2-position, AC/DC 24 V, 7 Nm with spring return 90/15 s, 2 switches	N4614	8-9
GMA131.1E	Rotary air damper actuator 3-position, AC/DC 24 V, 7 Nm with spring return 90/15 s	N4614	8-9
GMA131.9E	Rotary actuator for ball valves with spring-return, AC/DC 24 V, 3-position, 7 Nm, 90/15 s	N4658	7-173
GMA132.1E	Rotary air damper actuator 3-position, AC/DC 24 V, 7 Nm with spring return 90/15 s, potentiometer	N4614	8-9

Type Overview

Product Number	Description	Datasheet	Page
GMA136.1E	Air damper rotary actuator 3-position, AC/DC 24 V, 7 Nm with spring return 90/15 s, 2 switches	N4614	8-9
GMA161.1E	Rotary air damper actuator AC/DC 24 V / DC 0...10 V, 7 Nm with spring return 90/15 s	N4614	8-9
GMA161.9E	Rotary actuator for ball valves with spring-return, AC/DC 24 V, DC 0...10 V, 7 Nm, 90/15 s	N4658	7-173
GMA163.1E	Rotary air damper actuator AC/DC 24 V / DC 0...35 V, 7 Nm with spring return 90/15 s, adjustable	N4614	8-9
GMA164.1E	Rotary air damper actuator AC/DC 24 V / DC 0...35 V, 7 Nm with spring return 90/15 s, adjustable, 2 switches	N4614	8-9
GMA166.1E	Rotary air damper actuator AC/DC 24 V / DC 0...10 V, 7 Nm with spring return 90/15 s, 2 switches	N4614	8-9
GMA321.1E	Rotary air damper actuator 2-position, AC 230 V, 7 Nm with spring return 90/15 s	N4614	8-9
GMA326.1E	Rotary air damper actuator 2-position, AC 230 V, 7 Nm with spring return 90/15 s, 2 switches	N4614	8-9
GNA126.1E/08	Actuator for fire protection dampers 2-position, AC/DC 24 V, rotary actuator 7 Nm with spring return 90/15 s, 2 switches, Axis 8x8 mm	N4620	8-31
GNA126.1E/10	Actuator for fire protection dampers 2-position, AC/DC 24 V, rotary actuator 7 Nm with spring return 90/15 s, 2 switches, Axis 10x10 mm	N4620	8-31
GNA126.1E/12	Actuator for fire protection dampers 2-position, AC/DC 24 V, rotary actuator 7 Nm with spring return 90/15 s, 2 switches, Axis 12x12 mm	N4620	8-31
GNA126.1E/15	Actuator for fire protection dampers 2-position, AC/DC 24 V, rotary actuator 7 Nm with spring return 90/15 s, 2 switches, Axis 15x15 mm	N4620	8-31
GNA126.1E/T08	Actuator for fire protection dampers 2-position, AC/DC 24 V, rotary actuator 7 Nm with spring return 90/15 s, 2 switches, Axis 8x8 mm, with thermoelement	N4620	8-31
GNA126.1E/T10	Actuator for fire protection dampers 2-position, AC/DC 24 V, rotary actuator 7 Nm with spring return 90/15 s, 2 switches, Axis 10x10 mm, with thermoelement	N4620	8-31
GNA126.1E/T12	Actuator for fire protection dampers 2-position, AC/DC 24 V, rotary actuator 7 Nm with spring return 90/15 s, 2 switches, Axis 12x12 mm, with thermoelement	N4620	8-31
GNA126.1E/T15	Actuator for fire protection dampers 2-position, AC/DC 24 V, rotary actuator 7 Nm with spring return 90/15 s, 2 switches, Axis 15x15 mm, with thermoelement	N4620	8-31
GNA326.1E/08	Actuator for fire protection dampers 2-position, AC 230 V, rotary actuator 7 Nm with spring return 90/15 s, 2 switches, Axis 8x8 mm	N4620	8-32
GNA326.1E/10	Actuator for fire protection dampers 2-position, AC 230 V, rotary actuator 7 Nm with spring return 90/15 s, 2 switches, Axis 10x10 mm	N4620	8-32
GNA326.1E/12	Actuator for fire protection dampers 2-position, AC 230 V, rotary actuator 7 Nm with spring return 90/15 s, 2 switches, Axis 12x12 mm	N4620	8-32
GNA326.1E/15	Actuator for fire protection dampers 2-position, AC 230 V, rotary actuator 7 Nm with spring return 90/15 s, 2 switches, Axis 15x15 mm	N4620	8-32
GNA326.1E/T08	Actuator for fire protection dampers 2-position, AC 230 V, rotary actuator 7 Nm with spring return 90/15 s, 2 switches, Axis 8x8 mm, with thermoelement	N4620	8-32
GNA326.1E/T10	Actuator for fire protection dampers 2-position, AC 230 V, rotary actuator 7 Nm with spring return 90/15 s, 2 switches, Axis 10x10 mm, with thermoelement	N4620	8-32
GNA326.1E/T12	Actuator for fire protection dampers 2-position, AC 230 V, rotary actuator 7 Nm with spring return 90/15 s, 2 switches, Axis 12x12 mm, with thermoelement	N4620	8-32
GNA326.1E/T15	Actuator for fire protection dampers 2-position, AC 230 V, rotary actuator 7 Nm with spring return 90/15 s, 2 switches, Axis 15x15 mm with thermoelement	N4620	8-32
GND121.1U	Spring Return, UL Smoke, Fire/Smoke, 53 lb-in (6 Nm), 24 Vac/Vdc, 2-position Control, 15 sec Run	155-746	8-35
GND121.1U/F	Spring Return, UL Smoke, Fire/Smoke, 53 lb-in (6 Nm), 24 Vac/Vdc, 2-position Control, 15 sec Run, Elect. fuse link capable	155-746	8-35
GND126.1U	Spring Return, UL Smoke, Fire/Smoke, 53 lb-in (6 Nm), 24 Vac/Vdc, 2-position Control, 15 sec Run, 2-Aux	155-746	8-37
GND126.1U/F	Spring Return, UL Smoke, Fire/Smoke, 53 lb-in (6 Nm), 24 Vac/Vdc, 2-position Control, 15 sec Run, 2-Aux, Elect. fuse link capable	155-746	8-37
GND321.1U	Spring Return, UL Smoke, Fire/Smoke, 53 lb-in (6 Nm), 230 Vac, 2-position Control, 15 sec Run	155-746	8-36
GND321.1U/F	Spring Return, UL Smoke, Fire/Smoke, 53 lb-in (6 Nm), 230 Vac, 2-position Control, 15 sec Run, Elect. fuse link capable	155-746	8-36
GND326.1U	Spring Return, UL Smoke, Fire/Smoke, 53 lb-in (6 Nm), 230 Vac, 2-position Control, 15 sec Run, 2-Aux	155-746	8-38
GND326.1U/F	Spring Return, UL Smoke, Fire/Smoke, 53 lb-in (6 Nm), 230 Vac, 2-position Control, 15 sec Run, 2-Aux, Elect. fuse link capable	155-746	8-38

NEW PRODUCT

Type Overview

Product Number	Description	Datasheet	Page
GNP191.1E	Rotary air damper actuator, AC/DC 24 V, DC 0(2)...10 V/ 0(4)...20 mA, 6 Nm, with electronic fail-save function	N4609	8-20
GNP196.1E	Rotary air damper actuator, AC/DC 24 V, DC 0(2)...10 V/ 0(4)...20 mA, 6 Nm, with electronic fail-save function, 2 switches	N4609	8-20
GQD121.1A	Rotary air damper actuator, AC/DC 24 V, 2 Nm, 2-position, with spring return	N4604	8-7
GQD121.6A	Rotary damper actuator with spring return, AC/DC 24 V, 2-position, 2 Nm, 30/15 s	N4606	8-8
GQD126.1A	Rotary air damper actuator, AC/DC 24 V, 2 Nm, 2-position, with spring return, 2 switches	N4604	8-7
GQD131.1A	Rotary air damper actuator, AC/DC 24 V, 2 Nm, 3-position, with spring return	N4604	8-7
GQD131.9A	Rotary actuator for ball valves with spring-return, AC/DC 24 V, 3-position, 2 Nm, 30/15 s	N4659	7-171
GQD136.1A	Rotary air damper actuator, AC/DC 24 V, 2 Nm, 3-position, with spring return, 2 switches	N4604	8-7
GQD161.1A	Rotary air damper actuator, AC/DC 24 V, 2 Nm, DC 0...10 V, with spring return	N4604	8-7
GQD161.9A	Rotary actuator for ball valves with spring-return, AC/DC 24 V, DC 0...10 V, 2 Nm, 30/15 s	N4659	7-171
GQD166.1A	Rotary air damper actuator, AC/DC 24 V, 2 Nm, DC 0...10 V, with spring return, 2 switches	N4604	8-7
GQD321.1A	Rotary air damper actuator, AC 230 V, 2 Nm, 2-position, with spring return	N4604	8-7
GQD321.6A	Rotary damper actuator with spring return, AC 230 V, 2-position, 2 Nm, 30/15 s	N4606	8-8
GQD326.1A	Rotary air damper actuator, AC 230 V, 2 Nm, 2-position, with spring return, 2 switches	N4604	8-7
GSD121.1A	Rotary air damper actuator, AC/DC 24 V, SPST, 2 Nm, without spring return	N4603	8-12
GSD126.1A	Rotary air damper actuator, AC/DC 24 V, SPST, 2 Nm, without spring return, 2 auxilary switches	N4603	8-12
GSD321.1A	Rotary air damper actuator, AC 230 V, SPST, 2 Nm, without spring return	N4603	8-12
GSD326.1A	Rotary air damper actuator, AC 230 V, SPST, 2 Nm, without spring return, 2 auxilary switches	N4603	8-12
HCAIP001001	Installation template	N2886	10-12
HCAPH001001	Programming adapter	N2886	10-12
IRA211	Infrared Remote Control for room thermostats	N3060	5-34
KIT911	Starter kit with room unit and 1 radiator control actuator	N2720	4-18
KIT914	Starter kit with room unit and 4 radiator control actuators	N2720	4-18
M-Bus	Siemeca™ M-bus metering system	N5361	10-31
M2FP03GX	2-port modulating pilot valve with magnetic actuator, PN32, AC 24 V, DC 0...10 V / 4...20 mA / 0...20 Phs to control main valves	N4731	7-201
M3FB15LX/A	Diverting/2-port refrigerant valve, solder connection, PN32, DN15, kvs 3, AC 24 V, DC 0...10 V / 4...20 mA / 0...20 Phs	N4721	7-202
M3FB15LX06/A	Diverting/2-port refrigerant valve, solder connection, PN32, DN15, kvs 0.6, AC 24 V, DC 0...10 V / 4...20 mA / 0...20 Phs	N4721	7-202
M3FB15LX15/A	Diverting/2-port refrigerant valve, solder connection, PN32, DN15, kvs 1.5, AC 24 V, DC 0...10 V / 4...20 mA / 0...20 Phs	N4721	7-202
M3FB20LX/A	Diverting/2-port refrigerant valve, solder connection, PN32, DN20, kvs 5, AC 24 V, DC 0...10 V / 4...20 mA / 0...20 Phs	N4721	7-202
M3FB25LX/A	Diverting/2-port refrigerant valve, solder connection, PN32, DN25, kvs 8, AC 24 V, DC 0...10 V / 4...20 mA / 0...20 Phs	N4721	7-202
M3FB32LX	Diverting/2-port refrigerant valve, solder connection, PN32, DN32, kvs 12, AC 24 V, DC 0...10 V / 4...20 mA / 0...20 Phs	N4721	7-202
M3FK15LX	Mixing/2-port refrigerant valve, solder connection, PN32, DN15, kvs 3, AC 24 V, DC 0...10 V / 4...20 mA / 0...20 Phs	N4722	7-203
M3FK15LX06	Mixing/2-port refrigerant valve, solder connection, PN32, DN15, kvs 0.6, AC 24 V, DC 0...10 V / 4...20 mA / 0...20 Phs	N4722	7-203
M3FK15LX15	Mixing/2-port refrigerant valve, solder connection, PN32, DN15, kvs 1.5, AC 24 V, DC 0...10 V / 4...20 mA / 0...20 Phs	N4722	7-203
M3FK20LX	Mixing/2-port refrigerant valve, solder connection, PN32, DN20, kvs 5, AC 24 V, DC 0...10 V / 4...20 mA / 0...20 Phs	N4722	7-203
M3FK25LX	Mixing/2-port refrigerant valve, solder connection, PN32, DN25, kvs 8, AC 24 V, DC 0...10 V / 4...20 mA / 0...20 Phs	N4722	7-203
M3FK32LX	Mixing/2-port refrigerant valve, solder connection, PN32, DN32, kvs 12, AC 24 V, DC 0...10 V / 4...20 mA / 0...20 Phs	N4722	7-203
M3FK40LX	Mixing/2-port refrigerant valve, solder connection, PN32, DN40, kvs 20, AC 24 V, DC 0...10 V / 4...20 mA / 0...20 Phs	N4722	7-203

NEW PRODUCT

Type Overview

Product Number	Description	Datasheet	Page
M3FK50LX	Mixing/2-port refrigerant valve, solder connection, PN32, DN50, kvs 30, AC 24 V, DC 0...10 V / 4...20 mA / 0...20 Phs	N4722	7-203
M3P100FY	Mixing/2-port magnetic control valve, flange, PN16, DN100, kvs 130, AC 24 V, DC 0/2...10 V / 4...20 mA	N4454	7-136
M3P80FY	Mixing/2-port magnetic control valve, flange, PN16, DN80, kvs 80, AC 24 V, DC 0/2...10 V / 4...20 mA	N4454	7-136
MKB532.15-0.16	Control device, safety function DIN EN 14597, flanged, PN25, DN15, kvs 0.16, 2800 N, AC 230 V, 3P	N4387	7-84
MKB532.15-0.2	Control device, safety function DIN EN 14597, flanged, PN25, DN15, kvs 0.2, 2800 N, AC 230 V, 3P	N4387	7-84
MKB532.15-0.25	Control device, safety function DIN EN 14597, flanged, PN25, DN15, kvs 0.25, 2800 N, AC 230 V, 3P	N4387	7-84
MKB532.15-0.32	Control device, safety function DIN EN 14597, flanged, PN25, DN15, kvs 0.32, 2800 N, AC 230 V, 3P	N4387	7-84
MKB532.15-0.4	Control device, safety function DIN EN 14597, flanged, PN25, DN15, kvs 0.4, 2800 N, AC 230 V, 3P	N4387	7-84
MKB532.15-0.5	Control device, safety function DIN EN 14597, flanged, PN25, DN15, kvs 0.5, 2800 N, AC 230 V, 3P	N4387	7-84
MKB532.15-0.63	Control device, safety function DIN EN 14597, flanged, PN25, DN15, kvs 0.63, 2800 N, AC 230 V, 3P	N4387	7-84
MKB532.15-0.8	Control device, safety function DIN EN 14597, flanged, PN25, DN15, kvs 0.8, 2800 N, AC 230 V, 3P	N4387	7-84
MKB532.15-1	Control device, safety function DIN EN 14597, flanged, PN25, DN15, kvs 1, 2800 N, AC 230 V, 3P	N4387	7-84
MKB532.15-1.2	Control device, safety function DIN EN 14597, flanged, PN25, DN15, kvs 1.2, 2800 N, AC 230 V, 3P	N4387	7-84
MKB532.15-1.2G	Control device, safety function DIN EN 14597, flanged, PN25, DN15, kvs 1.2, 2800 N, AC 230 V, 3P, steam	N4389	7-86
MKB532.15-1.6	Control device, safety function DIN EN 14597, flanged, PN25, DN15, kvs 1.6, 2800 N, AC 230 V, 3P	N4387	7-84
MKB532.15-1.6G	Control device, safety function DIN EN 14597, flanged, PN25, DN15, kvs 1.6, 2800 N, AC 230 V, 3P, steam	N4389	7-86
MKB532.15-2	Control device, safety function DIN EN 14597, flanged, PN25, DN15, kvs 2, 2800 N, AC 230 V, 3P	N4387	7-84
MKB532.15-2.5	Control device, safety function DIN EN 14597, flanged, PN25, DN15, kvs 2.5, 2800 N, AC 230 V, 3P	N4387	7-84
MKB532.15-2.5G	Control device, safety function DIN EN 14597, flanged, PN25, DN15, kvs 2.5, 2800 N, AC 230 V, 3P, steam	N4389	7-86
MKB532.15-2G	Control device, safety function DIN EN 14597, flanged, PN25, DN15, kvs 2, 2800 N, AC 230 V, 3P, steam	N4389	7-86
MKB532.15-3.2	Control device, safety function DIN EN 14597, flanged, PN25, DN15, kvs 3.2, 2800 N, AC 230 V, 3P	N4387	7-84
MKB532.15-3.2G	Control device, safety function DIN EN 14597, flanged, PN25, DN15, kvs 3.2, 2800 N, AC 230 V, 3P, steam	N4389	7-86
MKB532.15-4	Control device, safety function DIN EN 14597, flanged, PN25, DN15, kvs 4, 2800 N, AC 230 V, 3P	N4387	7-84
MKB532.15-4G	Control device, safety function DIN EN 14597, flanged, PN25, DN15, kvs 4, 2800 N, AC 230 V, 3P, steam	N4389	7-86
MKB532.25-10	Control device, safety function DIN EN 14597, flanged, PN25, DN25, kvs 10, 2800 N, AC 230 V, 3P	N4387	7-84
MKB532.25-10G	Control device, safety function DIN EN 14597, flanged, PN25, DN25, kvs 10, 2800 N, AC 230 V, 3P, steam	N4389	7-86
MKB532.25-5	Control device, safety function DIN EN 14597, flanged, PN25, DN25, kvs 5, 2800 N, AC 230 V, 3P	N4387	7-84
MKB532.25-5G	Control device, safety function DIN EN 14597, flanged, PN25, DN25, kvs 5, 2800 N, AC 230 V, 3P, steam	N4389	7-86
MKB532.25-6.3	Control device, safety function DIN EN 14597, flanged, PN25, DN25, kvs 6.3, 2800 N, AC 230 V, 3P	N4387	7-84
MKB532.25-6.3G	Control device, safety function DIN EN 14597, flanged, PN25, DN25, kvs 6.3, 2800 N, AC 230 V, 3P, steam	N4389	7-86
MKB532.25-8	Control device, safety function DIN EN 14597, flanged, PN25, DN25, kvs 8, 2800 N, AC 230 V, 3P	N4387	7-84

NEW PRODUCT

Type Overview

Product Number	Description	Datasheet	Page
MKB532.25-8G	Control device, safety function DIN EN 14597, flanged, PN25, DN25, kvs 8, 2800 N, AC 230 V, 3P, steam	N4389	7-86
MKB532.40-12	Control device, safety function DIN EN 14597, flanged, PN25, DN40, kvs 12, 2800 N, AC 230 V, 3P	N4387	7-84
MKB532.40-12G	Control device, safety function DIN EN 14597, flanged, PN25, DN40, kvs 12, 2800 N, AC 230 V, 3P, steam	N4389	7-86
MKB532.40-16	Control device, safety function DIN EN 14597, flanged, PN25, DN40, kvs 16, 2800 N, AC 230 V, 3P	N4387	7-84
MKB532.40-16G	Control device, safety function DIN EN 14597, flanged, PN25, DN40, kvs 16, 2800 N, AC 230 V, 3P, steam	N4389	7-86
MKB532.40-20	Control device, safety function DIN EN 14597, flanged, PN25, DN40, kvs 20, 2800 N, AC 230 V, 3P	N4387	7-84
MKB532.40-20G	Control device, safety function DIN EN 14597, flanged, PN25, DN40, kvs 20, 2800 N, AC 230 V, 3P, steam	N4389	7-86
MKB532.40-25	Control device, safety function DIN EN 14597, flanged, PN25, DN40, kvs 25, 2800 N, AC 230 V, 3P	N4387	7-84
MKB532.40-25G	Control device, safety function DIN EN 14597, flanged, PN25, DN40, kvs 25, 2800 N, AC 230 V, 3P, steam	N4389	7-86
MKB562.15-0.16	Control device, safety function DIN EN 14597, flanged, PN25, DN15, kvs 0.16, 2800 N, AC 24 V, DC 0...10 V/4...20 mA	N4387	7-85
MKB562.15-0.2	Control device, safety function DIN EN 14597, flanged, PN25, DN15, kvs 0.2, 2800 N, AC 24 V, DC 0...10 V/4...20 mA	N4387	7-85
MKB562.15-0.25	Control device, safety function DIN EN 14597, flanged, PN25, DN15, kvs 0.25, 2800 N, AC 24 V, DC 0...10 V/4...20 mA	N4387	7-85
MKB562.15-0.32	Control device, safety function DIN EN 14597, flanged, PN25, DN15, kvs 0.32, 2800 N, AC 24 V, DC 0...10 V/4...20 mA	N4387	7-85
MKB562.15-0.4	Control device, safety function DIN EN 14597, flanged, PN25, DN15, kvs 0.4, 2800 N, AC 24 V, DC 0...10 V/4...20 mA	N4387	7-85
MKB562.15-0.5	Control device, safety function DIN EN 14597, flanged, PN25, DN15, kvs 0.5, 2800 N, AC 24 V, DC 0...10 V/4...20 mA	N4387	7-85
MKB562.15-0.63	Control device, safety function DIN EN 14597, flanged, PN25, DN15, kvs 0.63, 2800 N, AC 24 V, DC 0...10 V/4...20 mA	N4387	7-85
MKB562.15-0.8	Control device, safety function DIN EN 14597, flanged, PN25, DN15, kvs 0.8, 2800 N, AC 24 V, DC 0...10 V/4...20 mA	N4387	7-85
MKB562.15-1	Control device, safety function DIN EN 14597, flanged, PN25, DN15, kvs 1, 2800 N, AC 24 V, DC 0...10 V/4...20 mA	N4387	7-85
MKB562.15-1.2	Control device, safety function DIN EN 14597, flanged, PN25, DN15, kvs 1.2, 2800 N, AC 24 V, DC 0...10 V/4...20 mA	N4387	7-85
MKB562.15-1.2G	Control device, safety function DIN EN 14597, flanged, PN25, DN15, kvs 0.16, 2800 N, AC 24 V, DC 0...10 V/4...20 mA, steam	N4389	7-87
MKB562.15-1.6	Control device, safety function DIN EN 14597, flanged, PN25, DN15, kvs 1.6, 2800 N, AC 24 V, DC 0...10 V/4...20 mA	N4387	7-85
MKB562.15-1.6G	Control device, safety function DIN EN 14597, flanged, PN25, DN15, kvs 0.2, 2800 N, AC 24 V, DC 0...10 V/4...20 mA, steam	N4389	7-87
MKB562.15-2	Control device, safety function DIN EN 14597, flanged, PN25, DN15, kvs 2, 2800 N, AC 24 V, DC 0...10 V/4...20 mA	N4387	7-85
MKB562.15-2.5	Control device, safety function DIN EN 14597, flanged, PN25, DN15, kvs 2.5, 2800 N, AC 24 V, DC 0...10 V/4...20 mA	N4387	7-85
MKB562.15-2.5G	Control device, safety function DIN EN 14597, flanged, PN25, DN15, kvs 0.32, 2800 N, AC 24 V, DC 0...10 V/4...20 mA, steam	N4389	7-87
MKB562.15-2G	Control device, safety function DIN EN 14597, flanged, PN25, DN15, kvs 0.25, 2800 N, AC 24 V, DC 0...10 V/4...20 mA, steam	N4389	7-87
MKB562.15-3.2	Control device, safety function DIN EN 14597, flanged, PN25, DN15, kvs 3.2, 2800 N, AC 24 V, DC 0...10 V/4...20 mA	N4387	7-85
MKB562.15-3.2G	Control device, safety function DIN EN 14597, flanged, PN25, DN15, kvs 0.4, 2800 N, AC 24 V, DC 0...10 V/4...20 mA, steam	N4389	7-87
MKB562.15-4	Control device, safety function DIN EN 14597, flanged, PN25, DN15, kvs 4, 2800 N, AC 24 V, DC 0...10 V/4...20 mA	N4387	7-85
MKB562.15-4G	Control device, safety function DIN EN 14597, flanged, PN25, DN15, kvs 0.5, 2800 N, AC 24 V, DC 0...10 V/4...20 mA, steam	N4389	7-87
MKB562.25-10	Control device, safety function DIN EN 14597, flanged, PN25, DN25, kvs 10, 2800 N, AC 24 V, DC 0...10 V/4...20 mA	N4387	7-85

NEW PRODUCT

Type Overview

Product Number	Description	Datasheet	Page
MKB562.25-10G	Control device, safety function DIN EN 14597, flanged, PN25, DN15, kvs 1.2, 2800 N, AC 24 V, DC 0...10 V/4...20 mA, steam	N4389	7-87
MKB562.25-5	Control device, safety function DIN EN 14597, flanged, PN25, DN25, kvs 5, 2800 N, AC 24 V, DC 0...10 V/4...20 mA	N4387	7-85
MKB562.25-5G	Control device, safety function DIN EN 14597, flanged, PN25, DN15, kvs 0.63, 2800 N, AC 24 V, DC 0...10 V/4...20 mA, steam	N4389	7-87
MKB562.25-6.3	Control device, safety function DIN EN 14597, flanged, PN25, DN25, kvs 6.3, 2800 N, AC 24 V, DC 0...10 V/4...20 mA	N4387	7-85
MKB562.25-6.3G	Control device, safety function DIN EN 14597, flanged, PN25, DN15, kvs 0.8, 2800 N, AC 24 V, DC 0...10 V/4...20 mA, steam	N4389	7-87
MKB562.25-8	Control device, safety function DIN EN 14597, flanged, PN25, DN25, kvs 8, 2800 N, AC 24 V, DC 0...10 V/4...20 mA	N4387	7-85
MKB562.25-8G	Control device, safety function DIN EN 14597, flanged, PN25, DN15, kvs 1, 2800 N, AC 24 V, DC 0...10 V/4...20 mA, steam	N4389	7-87
MKB562.40-12	Control device, safety function DIN EN 14597, flanged, PN25, DN40, kvs 12, 2800 N, AC 24 V, DC 0...10 V/4...20 mA	N4387	7-85
MKB562.40-12G	Control device, safety function DIN EN 14597, flanged, PN25, DN15, kvs 1.6, 2800 N, AC 24 V, DC 0...10 V/4...20 mA, steam	N4389	7-87
MKB562.40-16	Control device, safety function DIN EN 14597, flanged, PN25, DN40, kvs 16, 2800 N, AC 24 V, DC 0...10 V/4...20 mA	N4387	7-85
MKB562.40-16G	Control device, safety function DIN EN 14597, flanged, PN25, DN15, kvs 2, 2800 N, AC 24 V, DC 0...10 V/4...20 mA, steam	N4389	7-87
MKB562.40-20	Control device, safety function DIN EN 14597, flanged, PN25, DN40, kvs 20, 2800 N, AC 24 V, DC 0...10 V/4...20 mA	N4387	7-85
MKB562.40-20G	Control device, safety function DIN EN 14597, flanged, PN25, DN15, kvs 2.5, 2800 N, AC 24 V, DC 0...10 V/4...20 mA, steam	N4389	7-87
MKB562.40-25	Control device, safety function DIN EN 14597, flanged, PN25, DN40, kvs 25, 2800 N, AC 24 V, DC 0...10 V/4...20 mA	N4387	7-85
MKB562.40-25G	Control device, safety function DIN EN 14597, flanged, PN25, DN15, kvs 3.2, 2800 N, AC 24 V, DC 0...10 V/4...20 mA, steam	N4389	7-87
MKB632.15-0.19	Control device, safety function DIN EN 14597, flanged, PN40, DN15, kvs 0.19, 2800 N, AC 230 V, 3P	N4388	7-88
MKB632.15-0.3	Control device, safety function DIN EN 14597, flanged, PN40, DN15, kvs 0.3, 2800 N, AC 230 V, 3P	N4388	7-88
MKB632.15-0.45	Control device, safety function DIN EN 14597, flanged, PN40, DN15, kvs 0.45, 2800 N, AC 230 V, 3P	N4388	7-88
MKB632.15-0.7	Control device, safety function DIN EN 14597, flanged, PN40, DN15, kvs 0.7, 2800 N, AC 230 V, 3P	N4388	7-88
MKB632.15-1.2	Control device, safety function DIN EN 14597, flanged, PN40, DN15, kvs 1.2, 2800 N, AC 230 V, 3P	N4388	7-88
MKB632.15-1.9	Control device, safety function DIN EN 14597, flanged, PN40, DN15, kvs 1.9, 2800 N, AC 230 V, 3P	N4388	7-88
MKB632.15-3	Control device, safety function DIN EN 14597, flanged, PN40, DN15, kvs 3, 2800 N, AC 230 V, 3P	N4388	7-88
MKB632.25-5	Control device, safety function DIN EN 14597, flanged, PN40, DN25, kvs 5, 2800 N, AC 230 V, 3P	N4388	7-88
MKB632.25-7.5	Control device, safety function DIN EN 14597, flanged, PN40, DN25, kvs 7.5, 2800 N, AC 230 V, 3P	N4388	7-88
MKB632.40-12	Control device, safety function DIN EN 14597, flanged, PN40, DN40, kvs 12, 2800 N, AC 230 V, 3P	N4388	7-88
MKB632.40-19	Control device, safety function DIN EN 14597, flanged, PN40, DN40, kvs 19, 2800 N, AC 230 V, 3P	N4388	7-88
MKB632.50-31	Control device, safety function DIN EN 14597, flanged, PN40, DN50, kvs 31, 2800 N, AC 230 V, 3P	N4388	7-88
MKB662.15-0.19	Control device, safety function DIN EN 14597, flanged, PN40, DN15, kvs 0.19, 2800 N, AC 24 V, DC 0...10 V/4...20 mA	N4388	7-89
MKB662.15-0.3	Control device, safety function DIN EN 14597, flanged, PN40, DN15, kvs 0.3, 2800 N, AC 24 V, DC 0...10 V/4...20 mA	N4388	7-89
MKB662.15-0.45	Control device, safety function DIN EN 14597, flanged, PN40, DN15, kvs 0.45, 2800 N, AC 24 V, DC 0...10 V/4...20 mA	N4388	7-89
MKB662.15-0.7	Control device, safety function DIN EN 14597, flanged, PN40, DN15, kvs 0.7, 2800 N, AC 24 V, DC 0...10 V/4...20 mA	N4388	7-89

NEW PRODUCT

Type Overview

Product Number	Description	Datasheet	Page
MKB662.15-1.2	Control device, safety function DIN EN 14597, flanged, PN40, DN15, kvs 1.2, 2800 N, AC 24 V, DC 0...10 V/4...20 mA	N4388	7-89
MKB662.15-1.9	Control device, safety function DIN EN 14597, flanged, PN40, DN15, kvs 1.9, 2800 N, AC 24 V, DC 0...10 V/4...20 mA	N4388	7-89
MKB662.15-3	Control device, safety function DIN EN 14597, flanged, PN40, DN15, kvs 3, 2800 N, AC 24 V, DC 0...10 V/4...20 mA	N4388	7-89
MKB662.25-5	Control device, safety function DIN EN 14597, flanged, PN40, DN25, kvs 5, 2800 N, AC 24 V, DC 0...10 V/4...20 mA	N4388	7-89
MKB662.25-7.5	Control device, safety function DIN EN 14597, flanged, PN40, DN25, kvs 7.5, 2800 N, AC 24 V, DC 0...10 V/4...20 mA	N4388	7-89
MKB662.40-12	Control device, safety function DIN EN 14597, flanged, PN40, DN40, kvs 12, 2800 N, AC 24 V, DC 0...10 V/4...20 mA	N4388	7-89
MKB662.40-19	Control device, safety function DIN EN 14597, flanged, PN40, DN40, kvs 19, 2800 N, AC 24 V, DC 0...10 V/4...20 mA	N4388	7-89
MKB662.50-31	Control device, safety function DIN EN 14597, flanged, PN40, DN40, kvs 31, 2800 N, AC 24 V, DC 0...10 V/4...20 mA	N4388	7-89
MKC632.100-124	Control device, safety function DIN EN 14597, flanged, PN40, DN100, kvs 124, 2800 N, AC 230 V, 3P	N4388	7-89
MKC632.125-200	Control device, safety function DIN EN 14597, flanged, PN40, DN125, kvs 200, 2800 N, AC 230 V, 3P	N4388	7-89
MKC632.150-300	Control device, safety function DIN EN 14597, flanged, PN40, DN150, kvs 300, 2800 N, AC 230 V, 3P	N4388	7-89
MKC632.65-49	Control device, safety function DIN EN 14597, flanged, PN40, DN65, kvs 49, 2800 N, AC 230 V, 3P	N4388	7-89
MKC632.80-78	Control device, safety function DIN EN 14597, flanged, PN40, DN80, kvs 78, 2800 N, AC 230 V, 3P	N4388	7-89
MKC662.100-124	Control device, safety function DIN EN 14597, flanged, PN40, DN100, kvs 124, 2800 N, AC 24 V, DC 0...10 V/4...20 mA	N4388	7-89
MKC662.125-200	Control device, safety function DIN EN 14597, flanged, PN40, DN125, kvs 200, 2800 N, AC 24 V, DC 0...10 V/4...20 mA	N4388	7-89
MKC662.150-300	Control device, safety function DIN EN 14597, flanged, PN40, DN150, kvs 300, 2800 N, AC 24 V, DC 0...10 V/4...20 mA	N4388	7-89
MKC662.65-49	Control device, safety function DIN EN 14597, flanged, PN40, DN65, kvs 49, 2800 N, AC 24 V, DC 0...10 V/4...20 mA	N4388	7-89
MKC662.80-78	Control device, safety function DIN EN 14597, flanged, PN40, DN80, kvs 78, 2800 N, AC 24 V, DC 0...10 V/4...20 mA	N4388	7-89
MKD532.15-0.16	Control device, safety function DIN EN 14597, flanged, PN25, DN15, kvs 0.16, 1000 N, AC 230 V, 3P	N4387	7-82
MKD532.15-0.2	Control device, safety function DIN EN 14597, flanged, PN25, DN15, kvs 0.2, 1000 N, AC 230 V, 3P	N4387	7-82
MKD532.15-0.25	Control device, safety function DIN EN 14597, flanged, PN25, DN15, kvs 0.25, 1000 N, AC 230 V, 3P	N4387	7-82
MKD532.15-0.32	Control device, safety function DIN EN 14597, flanged, PN25, DN15, kvs 0.32, 1000 N, AC 230 V, 3P	N4387	7-82
MKD532.15-0.4	Control device, safety function DIN EN 14597, flanged, PN25, DN15, kvs 0.4, 1000 N, AC 230 V, 3P	N4387	7-82
MKD532.15-0.5	Control device, safety function DIN EN 14597, flanged, PN25, DN15, kvs 0.5, 1000 N, AC 230 V, 3P	N4387	7-82
MKD532.15-0.63	Control device, safety function DIN EN 14597, flanged, PN25, DN15, kvs 0.63, 1000 N, AC 230 V, 3P	N4387	7-82
MKD532.15-0.8	Control device, safety function DIN EN 14597, flanged, PN25, DN15, kvs 0.8, 1000 N, AC 230 V, 3P	N4387	7-82
MKD532.15-1	Control device, safety function DIN EN 14597, flanged, PN25, DN15, kvs 1, 1000 N, AC 230 V, 3P	N4387	7-82
MKD532.15-1.25	Control device, safety function DIN EN 14597, flanged, PN25, DN15, kvs 1.25, 1000 N, AC 230 V, 3P	N4387	7-82
MKD532.15-1.6	Control device, safety function DIN EN 14597, flanged, PN25, DN15, kvs 1.6, 1000 N, AC 230 V, 3P	N4387	7-82
MKD532.15-2	Control device, safety function DIN EN 14597, flanged, PN25, DN15, kvs 2, 1000 N, AC 230 V, 3P	N4387	7-82
MKD532.15-2.5	Control device, safety function DIN EN 14597, flanged, PN25, DN15, kvs 2.5, 1000 N, AC 230 V, 3P	N4387	7-82

NEW PRODUCT

Type Overview

Product Number	Description	Datasheet	Page
MKD532.15-3.2	Control device, safety function DIN EN 14597, flanged, PN25, DN15, kvs 3.2, 1000 N, AC 230 V, 3P	N4387	7-82
MKD532.15-4	Control device, safety function DIN EN 14597, flanged, PN25, DN15, kvs 4, 1000 N, AC 230 V, 3P	N4387	7-82
MKD532.25-10	Control device, safety function DIN EN 14597, flanged, PN25, DN25, kvs 10, 1000 N, AC 230 V, 3P	N4387	7-82
MKD532.25-5	Control device, safety function DIN EN 14597, flanged, PN25, DN25, kvs 5, 1000 N, AC 230 V, 3P	N4387	7-82
MKD532.25-6.3	Control device, safety function DIN EN 14597, flanged, PN25, DN25, kvs 6.3, 1000 N, AC 230 V, 3P	N4387	7-82
MKD532.25-8	Control device, safety function DIN EN 14597, flanged, PN25, DN25, kvs 8, 1000 N, AC 230 V, 3P	N4387	7-82
MKD532.40-12.5	Control device, safety function DIN EN 14597, flanged, PN25, DN40, kvs 12.5, 1000 N, AC 230 V, 3P	N4387	7-82
MKD532.40-16	Control device, safety function DIN EN 14597, flanged, PN25, DN40, kvs 16, 1000 N, AC 230 V, 3P	N4387	7-82
MKD532.40-20	Control device, safety function DIN EN 14597, flanged, PN25, DN40, kvs 20, 1000 N, AC 230 V, 3P	N4387	7-82
MKD532.40-25	Control device, safety function DIN EN 14597, flanged, PN25, DN40, kvs 25, 1000 N, AC 230 V, 3P	N4387	7-82
MKD562.15-0.16	Control device, safety function DIN EN 14597, flanged, PN25, DN15, kvs 0.16, 1000 N, AC 24 V, DC 0...10 V/4...20 mA	N4387	7-83
MKD562.15-0.2	Control device, safety function DIN EN 14597, flanged, PN25, DN15, kvs 0.2, 1000 N, AC 24 V, DC 0...10 V/4...20 mA	N4387	7-83
MKD562.15-0.25	Control device, safety function DIN EN 14597, flanged, PN25, DN15, kvs 0.25, 1000 N, AC 24 V, DC 0...10 V/4...20 mA	N4387	7-83
MKD562.15-0.32	Control device, safety function DIN EN 14597, flanged, PN25, DN15, kvs 0.32, 1000 N, AC 24 V, DC 0...10 V/4...20 mA	N4387	7-83
MKD562.15-0.4	Control device, safety function DIN EN 14597, flanged, PN25, DN15, kvs 0.4, 1000 N, AC 24 V, DC 0...10 V/4...20 mA	N4387	7-83
MKD562.15-0.5	Control device, safety function DIN EN 14597, flanged, PN25, DN15, kvs 0.5, 1000 N, AC 24 V, DC 0...10 V/4...20 mA	N4387	7-83
MKD562.15-0.63	Control device, safety function DIN EN 14597, flanged, PN25, DN15, kvs 0.63, 1000 N, AC 24 V, DC 0...10 V/4...20 mA	N4387	7-83
MKD562.15-0.8	Control device, safety function DIN EN 14597, flanged, PN25, DN15, kvs 0.8, 1000 N, AC 24 V, DC 0...10 V/4...20 mA	N4387	7-83
MKD562.15-1	Control device, safety function DIN EN 14597, flanged, PN25, DN15, kvs 1, 1000 N, AC 24 V, DC 0...10 V/4...20 mA	N4387	7-83
MKD562.15-1.25	Control device, safety function DIN EN 14597, flanged, PN25, DN15, kvs 1.25, 1000 N, AC 24 V, DC 0...10 V/4...20 mA	N4387	7-83
MKD562.15-1.6	Control device, safety function DIN EN 14597, flanged, PN25, DN15, kvs 1.6, 1000 N, AC 24 V, DC 0...10 V/4...20 mA	N4387	7-83
MKD562.15-2	Control device, safety function DIN EN 14597, flanged, PN25, DN15, kvs 2, 1000 N, AC 24 V, DC 0...10 V/4...20 mA	N4387	7-83
MKD562.15-2.5	Control device, safety function DIN EN 14597, flanged, PN25, DN15, kvs 2.5, 1000 N, AC 24 V, DC 0...10 V/4...20 mA	N4387	7-83
MKD562.15-3.2	Control device, safety function DIN EN 14597, flanged, PN25, DN15, kvs 3.2, 1000 N, AC 24 V, DC 0...10 V/4...20 mA	N4387	7-83
MKD562.15-4	Control device, safety function DIN EN 14597, flanged, PN25, DN15, kvs 4, 1000 N, AC 24 V, DC 0...10 V/4...20 mA	N4387	7-83
MKD562.25-10	Control device, safety function DIN EN 14597, flanged, PN25, DN25, kvs 10, 1000 N, AC 24 V, DC 0...10 V/4...20 mA	N4387	7-83
MKD562.25-5	Control device, safety function DIN EN 14597, flanged, PN25, DN25, kvs 5, 1000 N, AC 24 V, DC 0...10 V/4...20 mA	N4387	7-83
MKD562.25-6.3	Control device, safety function DIN EN 14597, flanged, PN25, DN25, kvs 6.3, 1000 N, AC 24 V, DC 0...10 V/4...20 mA	N4387	7-83
MKD562.25-8	Control device, safety function DIN EN 14597, flanged, PN25, DN25, kvs 8, 1000 N, AC 24 V, DC 0...10 V/4...20 mA	N4387	7-83
MKD562.40-12.5	Control device, safety function DIN EN 14597, flanged, PN25, DN40, kvs 12.5, 1000 N, AC 24 V, DC 0...10 V/4...20 mA	N4387	7-83
MKD562.40-16	Control device, safety function DIN EN 14597, flanged, PN25, DN40, kvs 16, 1000 N, AC 24 V, DC 0...10 V/4...20 mA	N4387	7-83

NEW PRODUCT

Type Overview

Product Number	Description	Datasheet	Page
MKD562.40-20	Control device, safety function DIN EN 14597, flanged, PN25, DN40, kvs 20, 1000 N, AC 24 V, DC 0...10 V/4...20 mA	N4387	7-83
MKD562.40-25	Control device, safety function DIN EN 14597, flanged, PN25, DN40, kvs 25, 1000 N, AC 24 V, DC 0...10 V/4...20 mA	N4387	7-83
MVF461H15-0.6	2-port magnetic control valve, flange, PN16, DN15, kvs 0.6, AC / DC 24 V, DC 0/2...10 V / 0/4...20 mA	N4361	7-80
MVF461H15-1.5	2-port magnetic control valve, flange, PN16, DN15, kvs 1.5, AC / DC 24 V, DC 0/2...10 V / 0/4...20 mA	N4361	7-80
MVF461H15-3	2-port seat magnetic control valve, flange, PN16, DN15, kvs 3, AC / DC 24 V, DC 0/2...10 V / 0/4...20 mA	N4361	7-80
MVF461H20-5	2-port seat magnetic control valve, flange, PN16 DN20, kvs 5, AC / DC 24 V, DC 0/2...10 V / 0/4...20 mA	N4361	7-80
MVF461H25-8	2-port seat magnetic control valve, flange, PN16 DN25, kvs 8, AC / DC 24 V, DC 0/2...10 V / 0/4...20 mA	N4361	7-80
MVF461H32-12	2-port seat magnetic control valve, flange, PN16 DN32, kvs 12, AC / DC 24 V, DC 0/2...10 V / 0/4...20 mA	N4361	7-80
MVF461H40-20	2-port seat magnetic control valve, flange, PN16 DN40, kvs 20, AC / DC 24 V, DC 0/2...10 V / 0/4...20 mA	N4361	7-80
MVF461H50-30	2-port seat magnetic control valve, flange, PN16 DN50, kvs 30, AC / DC 24 V, DC 0/2...10 V / 0/4...20 mA	N4361	7-80
MVI421.15	On/off 2-port valve with spring return, 15 DN	N4867	7-109
MVI421.20	On/off 2-port valve with spring return, 20 DN	N4867	7-109
MVI421.25	On/off 2-port valve with spring return, 25 DN	N4867	7-109
MVL661.15-0.4	2-port refrigerant valve, internal solder connection, DN15, kvs 0.4, AC / DC 24 V, DC 0/2...10 V / 0/4...20 mA	N4714	7-199
MVL661.15-1.0	2-port refrigerant valve, internal solder connection, DN15, kvs 1.0, AC / DC 24 V, DC 0/2...10 V / 0/4...20 mA	N4714	7-199
MVL661.20-2.5	2-port refrigerant valve, internal solder connection, DN20, kvs 2.5, AC / DC 24 V, DC 0/2...10 V / 0/4...20 mA	N4714	7-199
MVL661.25-6.3	2-port refrigerant valve, internal solder connection, DN25, kvs 6.3, AC / DC 24 V, DC 0/2...10 V / 0/4...20 mA	N4714	7-199
MVL661.32-12	2-port refrigerant valve, internal solder connection, DN32, kvs 12, AC / DC 24 V, DC 0/2...10 V / 0/4...20 mA	N4714	7-199
MVS661.25-0.4N	2-port refrigerant valve, solder connection, PS 53, DN25, kvs 0.4, AC/DC 24 V, DC 0/2...10 V / 0/4...20 mA	N4717	7-200
MVS661.25-016N	2-port refrigerant valve, solder connection, PS 53, DN25, kvs 0.16, AC/DC 24 V, DC 0/2...10 V / 0/4...20 mA	N4717	7-200
MVS661.25-1.0N	2-port refrigerant valve, solder connection, PS 53, DN25, kvs 1.0, AC/DC 24 V, DC 0/2...10 V / 0/4...20 mA	N4717	7-200
MVS661.25-2.5N	2-port refrigerant valve, solder connection, PS 53, DN25, kvs 2.5, AC/DC 24 V, DC 0/2...10 V / 0/4...20 mA	N4717	7-200
MVS661.25-6.3N	2-port refrigerant valve, solder connection, PS 53, DN25, kvs 6.3, AC/DC 24 V, DC 0/2...10 V / 0/4...20 mA	N4717	7-200
MXF461.15-0.6	Mixing/2-port magnetic control valve, flange, PN16, DN15, kvs 0.6, AC 24 V, DC 0/2...10 V / 4...20 mA	N4455	7-134
MXF461.15-1.5	Mixing/2-port magnetic control valve, flange, PN16, DN15, kvs 1.5, AC 24 V, DC 0/2...10 V / 4...20 mA	N4455	7-134
MXF461.15-3.0	Mixing/2-port magnetic control valve, flange, PN16, DN15, kvs 3, AC 24 V, DC 0/2...10 V / 4...20 mA	N4455	7-134
MXF461.20-5.0	Mixing/2-port magnetic control valve, flange, PN16, DN20, kvs 5, AC 24 V, DC 0/2...10 V / 4...20 mA	N4455	7-134
MXF461.25-8.0	Mixing/2-port magnetic control valve, flange, PN16, DN25, kvs 8, AC 24 V, DC 0/2...10 V / 4...20 mA	N4455	7-134
MXF461.32-12	Mixing/2-port magnetic control valve, flange, PN16, DN32, kvs 12, AC 24 V, DC 0/2...10 V / 4...20 mA	N4455	7-134
MXF461.40-20	Mixing/2-port magnetic control valve, flange, PN16, DN40, kvs 20, AC 24 V, DC 0/2...10 V / 4...20 mA	N4455	7-134
MXF461.50-30	Mixing/2-port magnetic control valve, flange, PN16, DN50, kvs 30, AC 24 V, DC 0/2...10 V / 4...20 mA	N4455	7-134
MXF461.65-50	Mixing/2-port magnetic control valve, flange, PN16, DN65, kvs 50, AC 24 V, DC 0/2...10 V / 4...20 mA	N4455	7-134

NEW PRODUCT

Type Overview

Product Number	Description	Datasheet	Page
MXG461.15-0.6	Mixing/2-port magnetic control valve, external thread, PN16, DN15, kvs 0.6, AC 24 V, DC 0/2...10 V / 4...20 mA	N4455	7-155
MXG461.15-1.5	Mixing/2-port magnetic control valve, external thread, PN16, DN15, kvs 1.5, AC 24 V, DC 0/2...10 V / 4...20 mA	N4455	7-155
MXG461.15-3.0	Mixing/2-port magnetic control valve, external thread, PN16, DN15, kvs 3, AC 24 V, DC 0/2...10 V / 4...20 mA	N4455	7-155
MXG461.20-5.0	Mixing/2-port magnetic control valve, external thread, PN16, DN20, kvs 5, AC 24 V, DC 0/2...10 V / 4...20 mA	N4455	7-155
MXG461.25-8.0	Mixing/2-port magnetic control valve, external thread, PN16, DN25, kvs 8, AC 24 V, DC 0/2...10 V / 4...20 mA	N4455	7-155
MXG461.32-12	Mixing/2-port magnetic control valve, external thread, PN16, DN32, kvs 12, AC 24 V, DC 0/2...10 V / 4...20 mA	N4455	7-155
MXG461.40-20	Mixing/2-port magnetic control valve, external thread, PN16, DN40, kvs 20, AC 24 V, DC 0/2...10 V / 4...20 mA	N4455	7-155
MXG461.50-30	Mixing/2-port magnetic control valve, external thread, PN16, DN50, kvs 30, AC 24 V, DC 0/2...10 V / 4...20 mA	N4455	7-155
MXG461B15-0.6	Mixing/2-port magnetic control valve, external thread, PN16, DN15, kvs 0.6, AC / DC 24 V, DC 0/2...10 V / 4...20 mA	N4461	7-157
MXG461B15-1.5	Mixing/2-port magnetic control valve, external thread, PN16, DN15, kvs 1.5, AC / DC 24 V, DC 0/2...10 V / 4...20 mA	N4461	7-157
MXG461B15-3	Mixing/2-port magnetic control valve, external thread, PN16, DN15, kvs 3, AC / DC 24 V, DC 0/2...10 V / 4...20 mA	N4461	7-157
MXG461B20-5	Mixing/2-port magnetic control valve, external thread, PN16, DN20, kvs 5, AC / DC 24 V, DC 0/2...10 V / 4...20 mA	N4461	7-157
MXG461B25-8	Mixing/2-port magnetic control valve, external thread, PN16, DN25, kvs 8, AC / DC 24 V, DC 0/2...10 V / 4...20 mA	N4461	7-157
MXG461B32-12	Mixing/2-port magnetic control valve, external thread, PN16, DN32, kvs 12, AC / DC 24 V, DC 0/2...10 V / 4...20 mA	N4461	7-157
MXG461B40-20	Mixing/2-port magnetic control valve, external thread, PN16, DN40, kvs 20, AC / DC 24 V, DC 0/2...10 V / 4...20 mA	N4461	7-157
MXG461B50-30	Mixing/2-port magnetic control valve, external thread, PN16, DN50, kvs 30, AC / DC 24 V, DC 0/2...10 V / 4...20 mA	N4461	7-157
MXG461S15-1.5	Mixing/2-port magnetic control valve, external thread, PN16, DN15, kvs 1.5, AC 24 V, DC 0/2...10 V / 4...20 mA	N4465	7-159
MXG461S20-5.0	Mixing/2-port magnetic control valve, external thread, PN16, DN20, kvs 5, AC 24 V, DC 0/2...10 V / 4...20 mA	N4465	7-159
MXG461S25-8.0	Mixing/2-port magnetic control valve, external thread, PN16, DN25, kvs 8, AC 24 V, DC 0/2...10 V / 4...20 mA	N4465	7-159
MXG461S32-12	Mixing/2-port magnetic control valve, external thread, PN16, DN32, kvs 12, AC 24 V, DC 0/2...10 V / 4...20 mA	N4465	7-159
MXG462S50-30	Mixing/2-port magnetic control valve, external thread, PN16, DN50, kvs 30, AC / DC 24 V, DC 0/2...10 V / 0/4...20 mA	N4466	7-160
MXI421.15	On/off 3-port valve with spring return, 15 DN	N4867	7-150
MXI421.20	On/off 3-port valve with spring return, 20 DN	N4867	7-150
MXI421.25	On/off 3-port valve with spring return, 25 DN	N4867	7-150
OCI611.01	Central communication unit, max. 1 controller	N2533	2-12
OCI611.05	Central communication unit, max. 5 controllers	N2533	2-12
OCI611.16	Central communication unit, max. 16 controllers	N2533	2-12
OCI700.1	Service tool for KNX / LPB	N5655	2-8
OZW10	M-bus central unit	N5362	10-30
OZW111	M-bus central unit	N5363	10-31
OZW30	Central unit	N2841	10-35
OZW672.01	Web Server for 1 LPB/BSB device	N5712	2-14
OZW672.04	Web Server for 4 LPB devices	N5712	2-14
OZW672.16	Web Server for 16 LPB devices	N5712	2-14
OZW771.04	Central communication unit, max. 4 controllers	N3117	2-10
OZW771.10	Central communication unit, max. 10 controllers	N3117	2-10
OZW771.64	Central communication unit, max. 64 controllers	N3117	2-10
OZW772.01	Web server for 1 KNX device	N5701	2-11
OZW772.04	Web server for 4 KNX devices	N5701	2-11

NEW PRODUCT

Type Overview

Product Number	Description	Datasheet	Page
OZW772.16	Web server for 16 KNX devices	N5701	2-11
OZW772.250	Web server for 250 KNX devices	N5701	2-11
PPM-1U32.MPR	Remote I/O expansion module	140-1138	1-82
PTG1.128	Addresses 97...128	N8105	10-39
PTG1.16	Addresses 1...16	N8105	10-39
PTG1.32	Addresses 1...32	N8105	10-39
PTG1.64	Addresses 33...64	N8105	10-39
PTG1.96	Addresses 65...96	N8105	10-39
PXC00-E.D	System controller BACnet/IP	N9222	3-27
PXC00.D	System controller BACnet/LonTalk	N9222	3-27
PXC100-E.D	Automation station BACnet/IP, with up to 200 data points	N9222	3-27
PXC100.D	Automation station BACnet/LonTalk, with up to 200 data points	N9222	3-27
PXC200-E.D	Automation station BACnet/IP, with more than 200 data points	N9222	3-27
PXC200.D	Automation station BACnet/LonTalk, with more than 200 data points	N9222	3-27
PXC50-E.D	Automation station BACnet/IP, with up to 52 data points	N9222	3-27
PXC50.D	Automation station BACnet/LonTalk, with up to 52 data points	N9222	3-27
QAA10	Room temperature sensor, NTC, 5...30 °C	N1725	1-13
QAA2010	Room temperature sensor Pt100	N1745	6-5
QAA2012	Room temperature sensor Pt1000	N1745	6-5
QAA2012N	Room temperature sensor Pt1000, without Logo	N1745	6-5
QAA2020N	Room temperature sensor LG-Ni1000, without Logo	N1721	6-5
QAA2030	Room temperature sensor NTC10k	N1745	6-5
QAA2061	Room temperature sensor DC 0...10 V	N1749	6-7
QAA2061D	Room temperature sensor DC 0...10 V, with display	N1749	6-7
QAA2071	Room temperature sensor 4..20mA	N1749	6-7
QAA24	Room temperature sensor LG-Ni1000	N1721	6-5
QAA24/AP	Room temperature sensor	N1748	6-5
QAA25	Room unit with room temperature sensor and setpoint adjuster	N1721	6-6
QAA25/AP	Room unit with temperature sensor and setpoint adjuster	N1748	6-5
QAA26	Room unit with room temperature sensor and setpoint adjuster 5..30 °C	N1721	6-6
QAA27	Room unit with room temperature sensor and setpoint readjuster -3...3 K	N1721	6-6
QAA32	Room temperature sensor NTC 3 kOhm	N1747	6-7
QAA64	Room temperature sensor LG-Ni1000 for mounting on recessed conduit boxes	N1722	6-7
QAA910	Room temperature sensor	N2701	4-10
QAB30	Bus-compatible temperature measuring unit	N2851	10-38
QAC2010	Outside sensor Pt100	N1811	6-17
QAC2012	Outside sensor Pt1000	N1811	6-17
QAC2030	Outside sensor NTC10k	N1811	6-17
QAC22	Outside sensor LG-Ni1000	N1811	6-17
QAC3161	Outside / room temperature sensor DC 0..10V	N1814	6-17
QAC3171	Outside/ room temperature sensor HQ 4..20mA	N1814	6-17
QAC32	Outside sensor NTC 575 Ohm	N1811	6-17
QAC910	Meteo sensor	N2702	4-17
QAD2010	Strap-on temperature sensor Pt100	N1801	6-16
QAD2012	Strap-on temperature sensor Pt1000	N1801	6-16
QAD2030	Strap-on temperature sensor NTC10k	N1801	6-16
QAD22	Strap-on temperature sensor LG-Ni1000	N1801	6-16
QAD26.220	Strap-on temperature sensor with cable LG-Ni1000	N1802	6-16
QAE1020.024	Immersion temperature sensor 4 x 240 mm, LG-Ni1000, -5...105°C	N1790	6-14
QAE1612.010	Immersion temperature sensor	Q3730	6-11
QAE2111.010	Immersion temperature sensor 100 mm Pt100, without protection pocket	N1781	6-12
QAE2111.015	Immersion temperature sensor 150 mm Pt100 without protection pocket	N1781	6-12
QAE2112.010	Immersion temperature sensor 100 mm Pt1000 without protection pocket	N1781	6-12
QAE2112.015	Immersion temperature sensor 150 mm Pt1000 without protection pocket	N1781	6-12
QAE2120.010	Immersion temperature sensor 100 mm LG-Ni1000, with protection pocket	N1781	6-11
QAE2120.015	Immersion temperature sensor 150 mm, LG-Ni1000, with protection pocket	N1781	6-11
QAE2121.010	Immersion temperature sensor 100 mm, LG-Ni1000, without protection pocket	N1781	6-12

NEW PRODUCT

Type Overview

Product Number	Description	Datasheet	Page
QAE2121.015	Immersion temperature sensor 150 mm LG-Ni1000, without protection pocket	N1781	6-12
QAE2130.010	Immersion temperature sensor 100 mm NTC 10k without protection pocket	N1781	6-12
QAE2130.015	Immersion temperature sensor 150 mm NTC 10k without protection pocket	N1781	6-12
QAE2164.010	Immersion temperature sensor 100 mm DC 0...10 V	N1782	6-12
QAE2164.015	Immersion temperature sensor 150 mm DC 0...10 V	N1782	6-12
QAE2174.010	Immersion temperature sensor 100 mm DC 4...20 mA	N1782	6-12
QAE2174.015	Immersion temperature sensor 150 mm DC 4...20 mA	N1782	6-12
QAE26.9	Immersion temperature sensor Ø 6 mm with cable and fitting	N1790	6-13
QAE26.90	Immersion temperature sensor 4 x 65 mm, LG-Ni1000, -50...180°C	N1790	6-14
QAE26.91	Immersion temperature sensor 4 x 125 mm, LG-Ni1000, -50...180°C	N1790	6-14
QAE26.93	Immersion temperature sensor 4 x 240 mm, LG-Ni1000, -50...180°C	N1790	6-14
QAE26.95	Immersion temperature sensor 4 x 465 mm, LG-Ni1000, -50...180°C	N1790	6-14
QAE3010.010	Immersion temperature sensor 100 mm, Pt100, direct immersion	N1794	6-14
QAE3010.016	Immersion temperature sensor 160 mm, Pt100, direct immersion	N1794	6-14
QAE3075.010	Immersion temperature sensor 100 mm, DC 4...20 mA, direct immersion	N1794	6-14
QAE3075.016	Immersion temperature sensor 160 mm, DC 4...20 mA, direct immersion	N1794	6-14
QAF63.2	Frost sensor, modulating, capillary tube 2000 mm	N1821	5-62
QAF63.6	Frost sensor, modulating, capillary tube 6000 mm	N1821	5-62
QAF64.2	Frost monitor, modulating and 2-point, capillary tube 2000 mm	N1283	5-63
QAF64.6	Frost monitor, modulating and 2-point, capillary tube 6000 mm	N1283	5-63
QAF65.3-J	Frost monitor, 2-point, capillary tube 3000 mm, -10...15 °C	N1286	5-64
QAF81.3	Frost monitor, 2-point, capillary tube 3000 mm, -5...15 °C	N1284	5-65
QAF81.6	Frost monitor, 2-point, capillary tube 6000 mm	N1284	5-65
QAF81.6M	Frost monitor, 2-point, with manual reset, capillary tube 6000 mm	N1284	5-65
QAH11	Cable temperature sensor PVC 2.5 m, NTC 3 kOhm, with connectors 2.8 x 0.8 mm	N1840	6-20
QAH11.1	Cable temperature sensor PVC 2.5 m, NTC 3 kOhm, without connectors	N1840	6-20
QAM2110.040	Duct temperature sensor 400 mm, Pt100	N1761	6-9
QAM2112.040	Duct temperature sensor 400 mm, Pt1000	N1761	6-9
QAM2112.200	Duct temperature sensor 2000 mm, Pt1000	N1761	6-9
QAM2120.040	Duct temperature sensor 400 mm, LG-Ni1000	N1761	6-9
QAM2120.200	Duct temperature sensor 2000 mm, LG-Ni1000	N1761	6-9
QAM2120.600	Duct temperature sensor 6000 mm, LG-Ni1000	N1761	6-9
QAM2130.040	Duct temperature sensor 400 mm, NTC 10k	N1761	6-9
QAM2161.040	Duct temperature sensor 400 mm, DC 0...10 V	N1762	6-9
QAM2171.040	Duct temperature sensor 400 mm, DC 4...20 mA	N1762	6-9
QAP1030.200	Cable temperature sensor PVC 2 m, NTC 10k	N1831	6-19
QAP2010.150	Cable temperature sensor silicone 1.5 m, Pt100	N1831	6-19
QAP2012.150	Cable temperature sensor silicone 1.5 m, Pt1000	N1831	6-19
QAP21.2	Cable temperature sensor for high-temperature applications (180°C)	N1833	6-19
QAP21.3	Cable temperature sensor silicone 1.5 m, LG-Ni1000	N1831	6-19
QAP21.3/8000	Cable temperature sensor silicone 8 m, LG-Ni1000	N1831	6-19
QAP22	Cable temperature sensor PVC 2 m, LG-Ni1000	N1831	6-19
QAT22	Window pane temperature sensor	N1830	6-18
QAW10	Analog room unit	N2811	10-36
QAW20	Digital room unit with setpoint adjuster	N2812	10-36
QAW44	Remote room temperature sensor		1-27
QAW50	Digital room unit	N1635	1-26
QAW50.03	Digital room unit with address selector	N1635	1-26
QAW70-A	Multifunctional room unit, instructions in en, de, fr, it	N1637	1-26
QAW70-B	Multifunctional room unit, instructions in nl, sv, el, pl	N1637	1-26
QAW740	Room unit with KNX bus	N1633	1-37
QAW910	Room unit	N2703	4-9
QAW912	Room unit with KNX RF for 2 heating zones	N2720	4-19
QAX160	Touch Panel	N3974	1-82
QAX30.1	Room unit with sensor and PPS2 interface	N1741	3-30
QAX31.1	Room unit with sensor, setpoint adjuster and PPS2 interface	N1741	3-30
QAX32.1	Room unit with sensor, setpoint and operating mode selector and PPS2 interface	N1641	3-30

NEW PRODUCT

Type Overview

Product Number	Description	Datasheet	Page
QAX33.1	Room unit with sensor, setpoint and operating mode selector, fan speed selection, and PPS2 interface	N1642	3-31
QAX34.1	Room unit with sensor, setpoint and operating mode selector, display and PPS2 interface	N1645	3-31
QAX34.3	Room unit with sensor, setpoint and operating mode selector, display and PPS2 interface	N1640	3-31
QAX39.1	Universal setpoint adjuster with PPS2 interface	N1646	3-31
QAX50.5/C000	Versatile room unit with LonWorks interface, lighting systems (on / off)	N1648	3-38
QAX51.5/C000	Versatile room unit with LonWorks interface, lighting systems (dimmed)	N1648	3-38
QAX84.1/PPS2	Flush-mounted room unit complete with PPS2 interface and white Siemens frame	N1649	3-32
QAX90.1	Wireless room unit with temperature sensor	N1643	3-33
QAX903-9	Central apartment unit for HVAC and energy consumption data collection, without instructions; plain text output in 23 languages	N2741	4-8
QAX903-CS	Central apartment unit for HVAC and energy consumption data collection	N2741	4-8
QAX903-DE	Central apartment unit for HVAC and energy consumption data collection in German	N2741	4-8
QAX903-FR	Central apartment unit for HVAC and energy consumption data collection in French	N2741	4-8
QAX903-IT	Central apartment unit for HVAC and energy consumption data collection in Italian	N2741	4-8
QAX903-NL	Central apartment unit for HVAC and energy consumption data collection	N2741	4-8
QAX903-PL	Central apartment unit for HVAC and energy consumption data collection	N2741	4-8
QAX91.1	Wireless room unit with temperature sensor and setpoint adjuster	N1643	3-33
QAX913-9	Central apartment unit with energy consumption data collection, without instructions; plain text output in 23 languages	N2740	4-6
QAX913-CS	Central apartment unit with energy consumption data collection in Czech	N2740	4-6
QAX913-DE	Central apartment unit with energy consumption data collection in German	N2740	4-6
QAX913-FR	Central apartment unit with energy consumption data collection in French	N2740	4-6
QAX913-IT	Central apartment unit with energy consumption data collection	N2740	4-6
QAX913-NL	Central apartment unit with energy consumption data collection in Dutch	N2740	4-6
QAX913-PL	Central apartment unit with energy consumption data collection in Polish	N2740	4-6
QAX95.4	Room unit with EnOcean interface, 55 x 55 mm	N1663	3-35
QAX96.4	Room unit with EnOcean interface, with setpoint adjuster, 55 x 55 mm	N1663	3-35
QAX97.4	Room unit with EnOcean interface, with setpoint adjuster, button and switch, 55 x 55 mm	N1663	3-36
QAX98.4	Room unit with EnOcean interface, with setpoint adjuster, button and switch, 55 x 55 mm	N1663	3-36
QAZ21.682/101	Temperature sensor with silicone cable 2 m, LG-Ni1000	N1848	6-20
QAZ21.685/101	Temperature sensor with silicone cable 5 m, LG-Ni1000	N1848	6-20
QBE2001-P10U	Pressure sensor for refrigerants (0...10 V) -1...9 bar	N1907	6-51
QBE2001-P25U	Pressure sensor for refrigerants (0...10 V) -1...24 bar	N1907	6-51
QBE2001-P30U	Pressure sensor for refrigerants (0...10 V) -1...29 bar	N1907	6-51
QBE2001-P60U	Pressure sensor for refrigerants (0...10 V) -1...59 bar	N1907	6-51
QBE2002-P1	Pressure sensor for liquids and gases (0...10 V) 0...1 bar	N1909	6-46
QBE2002-P10	Pressure sensor for liquids and gases (0...10 V) 0...10 bar	N1909	6-46
QBE2002-P16	Pressure sensor for liquids and gases (0...10 V) 0...16 bar	N1909	6-46
QBE2002-P2	Pressure sensor for liquids and gases (0...10 V) 0...2 bar	N1909	6-46
QBE2002-P20	Pressure sensor for liquids and gases (0...10 V) 0...20 bar	N1909	6-46
QBE2002-P25	Pressure sensor for liquids and gases (0...10 V) 0...25 bar	N1909	6-46
QBE2002-P4	Pressure sensor for liquids and gases (0...10 V) 0...4 bar	N1909	6-46
QBE2002-P40	Pressure sensor for liquids and gases (0...10 V) 0...40 bar	N1909	6-46
QBE2002-P5	Pressure sensor for liquids and gases (0...10 V) 0...5 bar	N1909	6-46
QBE2002-P60	Pressure sensor for liquids and gases (0...10 V) 0...60 bar	N1909	6-46
QBE2101-P10U	Pressure sensor for refrigerants (4...20 mA) -1...9 bar	N1907	6-52
QBE2101-P25U	Pressure sensor for refrigerants (4...20 mA) -1...24 bar	N1907	6-52
QBE2101-P30U	Pressure sensor for refrigerants (4...20 mA) -1...29 bar	N1907	6-52
QBE2101-P60U	Pressure sensor for refrigerants (4...20 mA) -1...59 bar	N1907	6-52
QBE2102-P10	Pressure sensor for liquids and gases (0...20 mA) 0...10 bar	N1909	6-47
QBE2102-P16	Pressure sensor for liquids and gases (0...20 mA) 0...16 bar	N1909	6-47
QBE2102-P20	Pressure sensor for liquids and gases (0...20 mA) 0...20 bar	N1909	6-47
QBE2102-P4	Pressure sensor for liquids and gases (0...20 mA) 0...4 bar	N1909	6-47

NEW PRODUCT

Type Overview

Product Number	Description	Datasheet	Page
QBE2102-P5	Pressure sensor for liquids and gases (0...20 mA) 0...5 bar	N1909	6-47
QBE3000-D1	Differential pressure sensor for liquids and gase (0...10 V) 0...1 bar	N1922	6-49
QBE3000-D1.6	Differential pressure sensor for liquids and gase (0...10 V) 0...1.6 bar	N1922	6-49
QBE3000-D10	Differential pressure sensor for liquids and gase (0...10 V) 0...10 bar	N1922	6-49
QBE3000-D16	Differential pressure sensor for liquids and gase (0...10 V) 0...16 bar	N1922	6-49
QBE3000-D2.5	Differential pressure sensor for liquids and gase (0...10 V) 0...2.5 bar	N1922	6-49
QBE3000-D4	Differential pressure sensor for liquids and gase (0...10 V) 0...4 bar	N1922	6-49
QBE3000-D6	Differential pressure sensor for liquids and gase (0...10 V) 0...6 bar	N1922	6-49
QBE3100-D1	Differential pressure sensor for liquids and gase (4...20 mA) 0...1 bar	N1922	6-50
QBE3100-D1.6	Differential pressure sensor for liquids and gase (4...20 mA) 0...1.6 bar	N1922	6-50
QBE3100-D10	Differential pressure sensor for liquids and gase (4...20 mA) 0...10 bar	N1922	6-50
QBE3100-D16	Differential pressure sensor for liquids and gase (4...20 mA) 0...16 bar	N1922	6-50
QBE3100-D2.5	Differential pressure sensor for liquids and gase (4...20 mA) 0...2.5 bar	N1922	6-50
QBE3100-D4	Differential pressure sensor for liquids and gase (4...20 mA) 0...4 bar	N1922	6-50
QBE3100-D6	Differential pressure sensor for liquids and gase (4...20 mA) 0...6 bar	N1922	6-50
QBE61.3-DP10	Differential pressure sensor for liquids and gases 0...10 bar	N1923	6-48
QBE61.3-DP2	Differential pressure sensor for liquids and gases 0...2 bar	N1923	6-48
QBE61.3-DP5	Differential pressure sensor for liquids and gases 0...5 bar	N1923	6-48
QBE63-DP01	Differential pressure sensor for liquids and gases (DC 0...10 V) 0...10 kPa	N1920	6-49
QBE63-DP02	Differential pressure sensor for liquids and gases (DC 0...10 V) 0...20 kPa	N1920	6-49
QBE63-DP05	Differential pressure sensor for liquids and gases (DC 0...10 V) 0...50 kPa	N1920	6-49
QBE63-DP1	Differential pressure sensor for liquids and gases (DC 0...10 V) 0...100 kPa	N1920	6-49
QBE64-DP4	Differential pressure sensor for liquids and gases (DC 0...10 V) 0...400 kPa	N1921	1-55
QBM65-1	Air duct differential pressure sensor, 0...100 Pa	N1916	6-41
QBM65-1/C	Air duct differential pressure sensor, 0...100 Pa, with calibration certificate	N1919	6-42
QBM65-10	Air duct differential pressure sensor, 0...1000 Pa	N1916	6-41
QBM65-10/C	Air duct differential pressure sensor, 0...1000 Pa, with calibration certificate	N1919	6-42
QBM65-1U	Air duct differential pressure sensor, -50...50 Pa	N1916	6-41
QBM65-25	Air duct differential pressure sensor 0...2500 Pa	N1916	6-41
QBM65-25/C	Air duct differential pressure sensor, 0...2500 Pa, with calibration certificate	N1916	6-42
QBM65-3	Air duct differential pressure sensor 0...300 Pa	N1916	6-41
QBM65-3/C	Air duct differential pressure sensor, 0...300 Pa, with calibration certificate	N1919	6-42
QBM65-5	Air duct differential pressure sensor 0...500 Pa	N1916	6-41
QBM65.1-1	Air duct differential pressure sensor, 0...100 Pa, with display	N1916	6-41
QBM65.1-10	Air duct differential pressure sensor, 0...1000 Pa, with display	N1916	6-41
QBM65.1-25	Air duct differential pressure sensor, 0...2500 Pa, with display	N1916	6-41
QBM65.1-3	Air duct differential pressure sensor, 0...300 Pa, with display	N1916	6-41
QBM65.1-5	Air duct differential pressure sensor, 0...500 Pa, with display	N1916	6-41
QBM65.2-1	Differential pressure sensor with extracting-the-root characteristic (0...10 V) 0...100 Pa	N1916	6-42
QBM65.2-10	Air duct differential pressure sensor with extracting-the-root characteristic 0...1000 Pa	N1916	6-42
QBM65.2-25	Air duct differential pressure sensor with extracting-the-root characteristic 0...2500 Pa	N1916	6-42
QBM65.2-3	Air duct differential pressure sensor with extracting-the-root characteristic 0...300 Pa	N1916	6-42
QBM65.2-5	Air duct differential pressure sensor with extracting-the-root characteristic 0...500 Pa	N1916	6-42
QBM66.201	Air duct differential pressure sensor, 0...100 Pa / 0...200 Pa	N1910	6-43
QBM66.202	Air duct differential pressure sensor, 0...250 Pa / 0...500 Pa	N1910	6-43
QBM66.203	Differential pressure sensor (0...10 V) 0...1500 Pa / 0...3000 Pa	N1910	6-43
QBM66.204	Air duct differential pressure sensor 0...500 Pa / 0...1000 Pa	N1910	6-43
QBM75-1U/C	Air duct differential pressure sensor -50...50 Pa, with calibration certificate	N1919	6-44
QBM75.1-1/C	Air duct differential pressure sensor 0...100 Pa, with calibration certificate	N1919	6-44
QBM81-10	Differential pressure monitor, 100...1000 Pa	N1552	6-45
QBM81-20	Differential pressure monitor, 200...2000 Pa	N1552	6-45
QBM81-3	Differential pressure monitor, 20...300 Pa	N1552	6-45
QBM81-5	Differential pressure monitor, 50...500 Pa	N1552	6-45
QBM81-50	Differential pressure monitor, 500...5000 Pa	N1552	6-45

NEW PRODUCT

Type Overview

Product Number	Description	Datasheet	Page
QFA1000	Room hygrostat, setpoint setting range 30...90 % r.h., setpoint adjuster inside device	N1518	6-26
QFA1001	Room hygrostat, setpoint setting range 30...90 % r.h., external setpoint adjustment	N1518	6-26
QFA2000	Room sensor for humidity (DC 0...10 V)	N1857	6-21
QFA2001	Room sensor for humidity (DC 4...20mA)	N1857	6-21
QFA2020	Room sensor for humidity (DC 0...10 V) and temperature (LG-Ni1000)	N1857	6-21
QFA2060	Room sensor for humidity (DC 0...10 V) and temperature (DC 0...10 V)	N1857	6-21
QFA2060D	Room sensor for humidity (DC 0...10 V) and temperature (DC 0...10 V), with Display	N1857	6-21
QFA2060N	Room sensor for humidity (DC 0...10 V) and temperature (DC 0...10 V), without Logo	N1857	6-21
QFA2071	Room sensor for humidity (DC 4...20mA) and temperature (DC 4...20mA)	N1857	6-21
QFA3100	Room sensor for humidity (DC 0...10 V) for demanding requirements	N1858	6-22
QFA3101	Room sensor for humidity (4...20 mA) for demanding requirements	N1858	6-22
QFA3160	Room sensor for humidity (DC 0...10 V) and temperature (DC 0...10 V) for demanding requirements	N1858	6-22
QFA3160D	Room sensor for humidity (DC 0...10 V) and temperature (DC 0...10 V) for demanding requirements, with display	N1858	6-22
QFA3171	Room sensor for humidity (4...20 mA) and temperature (4...20 mA) for demanding requirements	N1858	6-22
QFA3171D	Room sensor for humidity (4...20 mA) and temperature (4...20 mA) for demanding requirements, with display	N1858	6-22
QFA4160	Room sensor for humidity (DC 0..10V) and temperature (DC 0..10V) with calibration certificate	N1859	6-22
QFA4160D	Room sensor for humidity (DC 0..10V) and temperature (DC 0..10V) with calibration certificate, with display	N1859	6-22
QFA4171	Room sensor for humidity (4..20mA) and temperature (4..20mA) with calibration certificate	N1859	6-22
QFA4171D	Room sensor for humidity (4..20mA) and temperature (4..20mA) with calibration certificate, with display	N1859	6-22
QFM1660	Duct sensor for humidity (0...10 V) and temperature (0...10 V)	Q3731	6-27
QFM2100	Duct sensor for humidity (DC 0...10 V)	N1864	6-27
QFM2101	Duct sensor for humidity (DC 4...20 mA)	N1864	6-27
QFM2120	Duct sensor for humidity (0...10 V) and temperature (Ni1000)	N1864	6-27
QFM2160	Duct sensor for humidity (DC 0...10 V) and temperature (DC 0...10 V)	N1864	6-27
QFM2160N	Duct sensor for humidity (DC 0...10 V) and temperature (DC 0...10 V), without Logo	N1864	6-27
QFM2171	Duct sensor for humidity (DC 4...20 mA) and temperature (DC 0...20 mA)	N1864	6-27
QFM3100	Duct sensor for humidity (DC 0...10 V) for demanding requirements	N1882	6-28
QFM3101	Duct sensor for humidity (4...20 mA) for demanding requirements	N1882	6-28
QFM3160	Duct sensor for humidity (DC 0...10 V) and temperature (DC 0...10 V) for demanding requirements	N1882	6-28
QFM3160D	Duct sensor for humidity (DC 0...10 V) and temperature (DC 0...10 V) for demanding requirements, with display	N1882	6-28
QFM3171	Duct sensor for humidity (4...20 mA) and temperature (0...20 mA) for demanding requirements	N1882	6-28
QFM3171D	Duct sensor for humidity (4...20 mA) and temperature (0...20 mA) for demanding requirements, with display	N1882	6-28
QFM4101	Duct sensor for humidity (4...20mA) with calibration certificate	N1883	6-29
QFM4160	Duct sensor for humidity (0...10 V) and temperature (0...10 V) with calibration certificate	N1883	6-29
QFM4171	Duct sensor for humidity (4...20 mA) and temperature (4...20 mA) with calibration certificate	N1883	6-29
QFM81.2	Duct hygrostat, setpoint setting range 15...95 % r.h.	N1514	6-31
QFM81.21	Room hygrostat, setpoint setting range 15...95 % r.h., setpoint adjuster inside device	N1514	6-31
QFP910	Water monitor	N2732	4-16
QLS60	Solar sensor	N1943	6-58
QPA1000	Room air quality sensor VOC	N1961	6-34
QPA1000N	Room air quality sensor VOC, without Logo	N1961	6-34
QPA2000	Room air quality sensor CO_2	N1961	6-34
QPA2000N	Room air quality sensor CO_2, without Logo	N1961	6-34
QPA2002	Room air quality sensor CO_2+VOC	N1961	6-34
QPA2002D	Room air quality sensor CO_2+VOC with display	N1961	6-34

NEW PRODUCT

Type Overview

Product Number	Description	Datasheet	Page
QPA2002N	Room air quality sensor CO_2+VOC, without Logo	N1961	6-34
QPA2060	Room air quality sensor CO_2+temperature	N1961	6-34
QPA2060D	Room air quality sensor CO_2+temperature with display	N1961	6-34
QPA2060N	Room air quality sensor CO_2+temperature, without Logo	N1961	6-34
QPA2062	Room air quality sensor CO_2+temperature+rel. air humidity	N1961	6-34
QPA2062D	Room air quality sensor CO_2+temperature+rel. air humidity with display	N1961	6-34
QPA2080	Room air quality sensor CO_2+temperature (passiv)	N1961	6-34
QPA2080D	Room air quality sensor CO_2+temperature (passiv) with display	N1961	6-34
QPA84	Indoor air quality controller with integrated VOC sensor for mixed gas	N1571	6-35
QPM1100	Duct air quality sensor VOC	N1962	6-40
QPM2100	Duct air quality sensor CO_2	N1962	6-40
QPM2100N	Duct air quality sensor CO_2, without Logo	N1962	6-40
QPM2102	Duct air quality sensor CO_2+VOC	N1962	6-40
QPM2102D	Duct air quality sensor CO_2+VOC with display	N1962	6-40
QPM2160	Duct air quality sensor CO_2+temperature	N1962	6-40
QPM2160D	Duct air quality sensor CO_2+temperature with display	N1962	6-40
QPM2162	Duct air quality sensor CO_2+temperature+rel. air humidity	N1962	6-40
QPM2162D	Duct air quality sensor CO_2+temperature+rel. air humidity with d isplay	N1962	6-40
QPM2180	Duct air quality sensor CO_2+temperature (passiv)	N1962	6-40
QVE1900	Flow switch for use in hydraulic systems, PN10, DN32...200	N1592	6-55
QVE1901	Flow switch for use in hydraulic systems, PN25, DN20...200	N1594	6-55
QVE1902.010	Flow switch for liquids in piping DN 10	N1596	6-56
QVE1902.015	Flow switch for liquids in piping DN 15	N1596	6-56
QVE1902.020	Flow switch for liquids in piping DN 20	N1596	6-56
QVE1902.025	Flow switch for liquids in piping DN 25	N1596	6-56
QVE2000.010	Flow sensor made from fiber-glass reinforced plastic for liquids in DN 10 pipes, DC Output: 0...10 V	N1597	6-53
QVE2000.015	Flow sensor made from fiber-glass reinforced plastic for liquids in DN 15 pipes, DC Output: 0...10 V	N1597	6-53
QVE2000.020	Flow sensor made from fiber-glass reinforced plastic for liquids in DN 20 pipes, DC Output: 0...10 V	N1597	6-53
QVE2000.025	Flow sensor made from fiber-glass reinforced plastic for liquids in DN 25 pipes, DC Output: 0...10 V	N1597	6-53
QVE2100.010	Flow sensor made from fiber-glass reinforced plastic for liquids in DN 10 pipes, DC Output: 4...20 mA	N1597	6-53
QVE2100.015	Flow sensor made from fiber-glass reinforced plastic for liquids in DN 15 pipes, DC Output: 4...20 mA	N1597	6-53
QVE2100.020	Flow sensor made from fiber-glass reinforced plastic for liquids in DN 20 pipes, DC Output: 4...20 mA	N1597	6-53
QVE2100.025	Flow sensor made from fiber-glass reinforced plastic for liquids in DN 25 pipes, DC Output: 4...20 mA	N1597	6-53
QVE3000.010	Flow sensor made from red brass for liquids in DN 10 pipes, DC Output: 0...10 V	N1598	6-54
QVE3000.015	Flow sensor made from red brass for liquids in DN 15 pipes, DC Output: 0...10 V	N1598	6-54
QVE3000.020	Flow sensor made from red brass for liquids in DN 20 pipes, DC Output: 0...10 V	N1598	6-54
QVE3000.025	Flow sensor made from red brass for liquids in DN 25 pipes, DC Output: 0...10 V	N1598	6-54
QVE3100.010	Flow sensor made from red brass for liquids in DN 10 pipes, DC Output: 4...20 mA	N1598	6-54
QVE3100.015	Flow sensor made from red brass for liquids in DN 15 pipes, DC Output: 4...20 mA	N1598	6-54
QVE3100.020	Flow sensor made from red brass for liquids in DN 20 pipes, DC Output: 4...20 mA	N1598	6-54
QVE3100.025	Flow sensor made from red brass for liquids in DN 25 pipes, DC Output: 4...20 mA	N1598	6-54
QVM62.1	Duct sensor for air velocity	N1932	6-57
QXA2000	Condensation monitor	N1542	6-32
QXA2001	Condensation monitor with remote sensor head (cable length 1.5 m)	N1542	6-32
RAA11	Electromechanical room thermostat, public sector model	N3561	5-7
RAA200	Electromechanical room thermostat, large model	N3002	5-7
RAA21	Electromechanical room thermostat, basic model	N3562	5-7
RAA31	Electromechanical room thermostat with on/off switch	N3563	5-8
RAA31.16	Electromechanical room thermostat with on/off switch and LED	N3563	5-8

NEW PRODUCT

Type Overview

Product Number	Description	Datasheet	Page
RAA31.26	Electromechanical room thermostat with on/off switch and LED, auxillary switch and LED	N3563	5-8
RAA41	Electromechanical room thermostat with selector heating/off/cooling, 1 output	N3564	5-8
RAB11	Electromechanical room thermostat for 2-pipe fan coils, selector heating/cooling	N3015	5-26
RAB11.1	Electromechanical room thermostat for 2-pipe fan coils, selector heating/cooling/fan only	N3015	5-26
RAB21	Electromechanical room thermostat for 2-pipe fan coils, basic model	N3016	5-26
RAB21.1	Electromechanical room thermostat for 2-pipe fan coils, selector heating-cooling/fan only	N3016	5-27
RAB31	Electromechanical room thermostat for 4-pipe fan coils, selector heating/cooling	N3017	5-27
RAB31.1	Electromechanical room thermostat for 4-pipe fan coils, selector heating/cooling/fan only	N3017	5-27
RAB91	Fan speed switch, 3-stage	N3018	5-27
RAG-ST.1	Safety temperature limiter fixed 40...230 °C, pocket 150 mm, capillary 150 mm	N1211	5-61
RAG-TW.1	Thermal reset limit thermostat, 40...230 °C, capillary tube 150 mm	N1211	5-61
RAK-H-M	Terminal housing	N1207	5-56
RAK-ST.010FP-M	Safety temperature limiter fixed 95 °C, pocket 100 mm, capillary 700 mm	N1204	5-55
RAK-ST.020FP-M	Safety temperature limiter fixed 100 °C, pocket 100 mm, capillary 700 mm	N1204	5-55
RAK-ST.030FP-M	Safety temperature limiter fixed 110 °C, pocket 100 mm, capillary 700 mm	N1204	5-55
RAK-ST.1300P-M	Safety temperature limiter fixed 120...130 °C, pocket 100 mm, capillary 700 mm	N1204	5-55
RAK-ST.1310P-M	Safety temperature limiter fixed 90...110 °C, pocket 100 mm, capillary 700 mm	N1204	5-55
RAK-ST.1385M	Safety limit thermostat, 40...70 °C, capillary length 700 mm	N1204	5-55
RAK-ST.1430S-M	Safety temperature limiter fixed 80...100 °C, pocket 100 mm, capillary 700 mm	N1204	5-55
RAK-ST.1600MP	Safety limit thermostat, 95...130 °C, protection pocket 100 mm, capillary length 700 mm	N1204	5-49
RAK-TB.1400S-M	Temperature limiter, 45...60 °C, capillary 700 mm, clamping band	N1206	5-54
RAK-TB.1410B-M	Temperature limiter, 50...70 °C, pocked 100 mm, capillary 700 mm, clamping band	N1206	5-54
RAK-TB.1420S-M	Temperature limiter, 65...80 °C, capillary 700 mm, clamping band	N1206	5-54
RAK-TR.1000B-H	Temperature controller 15...95 °C, protection pocket 100 mm, capillary 700 mm, clamp on band	N1205	5-53
RAK-TR.1000S-H	Thermal reset limit thermostat, 15..95 °C, capillary tube 700 mm, clamping band	N1205	5-53
RAK-TR.1210B-H	Thermal reset limit thermostat, 15..82 °C, protective pocket 100 mm, capillary tube 700 mm, clamping band	N1205	5-53
RAK-TW.1000B-H	Thermal reset limit thermostat, 15...95 °C, protective pocket 100 mm, capillary tube 700 mm, clamping band	N1202	5-53
RAK-TW.1000HB	Thermal reset limit thermostat, 15...95 °C, protection pocket 100 mm, capillary length 700 mm	N1202	5-54
RAK-TW.1000S-H	Thermal reset limit thermostat, 15...95 °C, capillary tube 700 mm, clamping band	N1202	5-53
RAK-TW.1200B-H	Thermal reset limit thermostat, 40...120 °C, protective pocket 100 mm, capillary tube 700 mm, clamping band	N1202	5-53
RAK-TW.1200HP	Thermal reset limit thermostat, 40...120 °C, protection pocket 100 mm, capillary length 700 mm	N1202	5-54
RAK-TW.1200S-H	Thermal reset limit thermostat, 40...120 °C, capillary tube 700 mm, clamping band	N1202	5-53
RAK-TW.5000HS	Frost protection monitor, 5...65 °C, capillary length 1600 mm	N1203	5-66
RAK-TW.5000S-H	Frost protection monitor 5...65 °C, capillary tube 1600 mm, clamping band	N1203	5-65
RAK-TW.5010S-H	Frost protection monitor 10...50 °C, capillary tube 1600 mm, clamping band	N1203	5-65
RAM-TR.2000M	Strap-on temperature controller, 20...90 °C, fixing spring, setpoint adjuster externally	N1198	5-59
RAM-TW.2000M	Strap-on temperature limitation, 20...90 °C, fixing spring, setpoint adjuster internally	N1198	5-59
RAV11.1	Room temperature controller with 24-hour time switch	N2224	5-23
RAV11.7	Room temperature controller with 7-day time switch	N2224	5-23
RAZ-ST.011FP-J	Temperature controller/ safety temperature limiter, TR 15...95 °C/ STB 100 °C, dual protection pocket 100 mm, capillary tube each 700 mm	N1214	5-58
RAZ-ST.030FP-J	Temperature controller/ safety temperature limiter, TR 15...95 °C/ STB 110 °C, dual protection pocket 100 mm, capillary tube each 700 mm	N1214	5-58
RAZ-ST.1500P-J	Temperature controller/ safety temperature limiter, TR 15...95 °C/ STB 110...130 °C, dual protection pocket 100 mm, capillary tube each 700 mm	N1214	5-58
RAZ-ST.1510P-J	Temperature controller/ safety temperature limiter, TR 15...95 °C/ STB 90...110 °C, dual protection pocket 100 mm, capillary tube each 700 mm	N1214	5-58
RAZ-TW.1000P-J	Temperature controller/ thermal limit reset thermostat, TR 15...95 °C/ TW 15...95 °C, dual protection pocket 100 mm, capillary tube each 700 mm	N1212	5-57

NEW PRODUCT

Type Overview

Product Number	Description	Datasheet	Page
RAZ-TW.1200P-J	Temperature controller/ thermal limit reset thermostat, TR 40...120 °C/ TW 40...120 °C, dual protection pocket 100 mm, capillary tube each 700 mm	N1212	5-57
RCC10	Room temperature controller for 2-pipe fan coils, AC 230 V, positioning signal 2 pt, return air sensor	N3021	5-28
RCC20	Room temperature controller for 2-pipe fan coils, AC 230 V, positioning signal 2 pt, return air sensor, el. heater	N3022	5-29
RCC30	Room temperature controller for 4-pipe fan coils, AC 230 V, positioning signal 2 2 pt, return air sensor	N3023	5-29
RCU10	Universal room temperature controller for 4-pipe systems, AC 230 V, positioning signal 2 pt or PWM	N3041	5-9
RCU15	Universal room temperature controller for 4-pipe systems, AC 24 V, positioning signal 2 pt or PWM	N3048	5-9
RCU20	Universal room temperature controller for 2-pipe systems, AC 230 V, positioning signal 3 pt	N3042	5-10
RCU50	Room temperature controller for VAV and CAV systems, AC 24 V, positioning signal DC 0...10 V	N3045	5-44
RCU50.2	Room temperature controller for VAV and CAV systems, AC 24 V, positioning signal DC 0...10 V, manual changeover heating/cooling/off	N3045	5-44
RDD10	Simple electronic room temperature controller with LCD	N3031	5-14
RDD10.1	Simple electronic room temperature controller with LCD	N3031	5-14
RDD10.1DHW	Simple electronic room temperature controller with LCD and DHW control	N3033	5-14
RDD310	Semi flush-mounted room temperature controllers with LCD	N3077	5-15
RDE10	Room temperature controller with 7-day time switch and LCD	N3035	5-20
RDE10.1	Room temperature controller with 7-day time switch and LCD	N3035	5-21
RDE10.1DHW	Room temperature controller with 7-day time switch, LCD and DHW control	N3038	5-21
RDE20.1	Room temperature controller with 7-day time switch and LCD	N3036	5-21
RDE410	Semi flush-mounted room temperature controllers with LCD	N3077	5-22
RDF110	Room temperature controller for 2-pipe fan coils or DX-type equipment, return air temperature sensor	N3057	5-35
RDF110.2	Room temperature controller for 2-pipe fan coils or DX-type equipment	N3057	5-35
RDF210/IR	Room temperature controller for 2-pipe fan coils or DX-type equipment, return air temperature sensor, infrared remote control, 7-day time switch	N3058	5-36
RDF300	Semi Flush-mount room temperature controller for 2-/4-pipe fan coils or DX type equipment	N3076	5-37
RDF300.02	Semi Flush-mount room temperature controller for 2-/4-pipe fan coils or DX type equipment, backlit LCD	N3076	5-38
RDF301	Semi Flush-mount room thermostat with KNX communications, 2-/4-pipe fan coils or DX type equipment	N3171	5-49
RDF301.50	Semi Flush-mount room thermostat with KNX communications, 2-/4-pipe fan coils or DX type equipment, four buttons for switching lights and blinds	N3171	5-49
RDF302	Semi Flush-mount room thermostat with Modbus communications, 2-/4-pipe fan coils or DX type equipment	N3079	5-52
RDF310.2	Semi Flush-mount room temperature controller for 2-pipe fan coils or DX type equipment	N3067	5-39
RDF310.21	Semi Flush-mount room temperature controller for 2-pipe fan coils or DX type equipment, infrared remote control, backlit LCD	N3067	5-39
RDF340	Semi Flush-mount room temperature controller for 2-/4-pipe fan coils	N3076	5-40
RDF400.01	Semi Flush-mount room temperature controller for 2-/4-pipe fan coils or DX type equipment, infrared remote control, 7-day time switch, backlit LCD	N3076	5-42
RDF410.21	Semi Flush-mount room temperature controller for 2-pipe fan coils or DX type equipment, infrared remote control, 7-day time switch, backlit LCD	N3067	5-42
RDF510.2	Semi Flush-mount room temperature controller for 2-pipe fan coils or DX type equipment, DELTA lavie design	N3064	5-43
RDF600	Semi Flush-mount room temperature controller for 2-/4-pipe fan coils or DX type equipment, backlit LCD	N3076	5-37
RDF600KN	Semi Flush-mount room thermostat with KNX communications, 2-/4-pipe fan coils or DX type equipment	N3171	5-49
RDF600T	Semi Flush-mount room temperature controller for 2-/4-pipe fan coils or DX type equipment, infrared remote control, 7-day time switch, backlit LCD	N3076	5-41

NEW PRODUCT

Type Overview

Product Number	Description	Datasheet	Page
RDG100	Room thermostat, AC 230 V, for fan coil units and universal applications	N3181	5-32
RDG100KN	Room thermostat with KNX communications, AC 230 V, for fan coil units and universal applications	N3191	5-48
RDG100T	Room thermostat, AC 230 V, for fan coil units and universal applications, 7-day time switch, vertical	N3181	5-34
RDG100T/H	Room thermostat, AC 230 V, for fan coil units and universal applications, 7-day time switch, horizontal	N3181	5-34
RDG110	Room thermostat, AC 230 V, for fan coil units and heat pump applications	N3181	5-33
RDG140	Room thermostat, AC 24 V, for fan coil units and universal applications, analog outputs DC 0...10 V	N3181	5-33
RDG160	Room thermostat, AC 24 V, for fan coil units and universal applications, analog outputs DC 0...10 V / ECM fan	N3181	5-33
RDG400	Room thermostat, AC 24 V, VAV heating and cooling systems	N3182	5-45
RDG400KN	Room thermostat with KNX communications, AC 24 V, VAV heating and cooling systems	N3192	5-50
RDH10	Room temperature controller, LCD, setting knob	N3069	5-15
RDH10RF/SET	Room temperature controller radio frequency set (transmitter and receiver), LCD, setting knob	N3070	5-15
RDJ10	Room temperature controller with 24-hour time switch, LCD, setting knob	N3071	5-20
RDJ10RF/SET	Room temperature controller radio frequency set (transmitter and receiver) with 24-hour time switch, LCD, setting knob	N3072	5-20
RDU340	Semi Flush-mount room temperature controllers with LCD for VAV application	N3078	5-46
RDU341	Semi Flush-mount room thermostat with KNX communications, for VAV application	N3172	5-51
REA23/101	Room temperature controller with 7-day time switch and LCD	N2216	5-23
REA23M/101	Room temperature controller with 7-day time switch and LCD, OpenTherm Plus compatible	N2217	5-24
REV100	Room temperature controller with 2-point control and 24-hour time switch, batteries, housing signal white	N2211	5-19
REV13	Room temperature controller with 2-point control and 24-hour time switch, batteries, only heating	N2201	5-18
REV13DC	Room temperature controller with 2-point control and 24-hour time switch, batteries, only heating, receive time signal DCF77	N2201	5-18
REV17	Room temperature controller with 2-point control and 7-day time switch, batteries, only heating	N2203	5-18
REV17DC	Room temperature controller with 2-point control and 7-day time switch, batteries, only heating, receive time signal DCF77	N2203	5-18
REV200	Room temperature controller with 2-point control and 7-day time switch, batteries, housing signal white	N2212	5-19
REV200RF/SET	Room temperature controller with 2-point control and 7-day time switch, receiver with relay outputs (RF set), batteries, housing signal white	N2214	5-19
REV24	Room temperature controller with 2-point control and 7-day time switch, batteries, heating and cooling	N2205	5-18
REV24DC	Room temperature controller with 2-point control and 7-day time switch, batteries, heating and cooling, receive time signal DCF77	N2205	5-18
REV24RF/SET	Room temperature controller with 2-point control and 7-day time switch, receiver with relay outputs (RF set), batteries, heating or cooling	N2206	5-18
REV24RFDC/SET	Room temperature controller with 2-point control and 7-day time switch, receiver with relay outputs (RF set), batteries, heating or cooling, receive time signal DCF77	N2206	5-18
REV26	Room temperature controller with 2-point control and 7-day time switch, batteries, flush mounted, housing anthracite grey	N2242	5-23
REV26GF-I	Room temperature controller with 2-point control and 7-day time switch, batteries, flush mounted, housing fokker grey	N2242	5-23
REV300	Room temperature controller with 3-point control and with 7-day time switch, batteries, housing signal white	N2213	5-19
REV34	Room temperature controller with 3-point control and with 7-day time switch, batteries, only heating	N2208	5-18
REV34DC	Room temperature controller with 3-point control and with 7-day time switch, batteries, only heating, receive time signal DCF77	N2208	5-18
RLA162	Room temperature controller, AC 24 V, 2 outputs DC 0...10 V	N3331	1-51
RLA162.1	Room temperature controller, AC 24 V, 2 outputs DC 0...10 V, operating mode selector	N3336	1-52
RLE127	Differential temperature controller, AC 230 V, 2-position output	N3337	1-5

NEW PRODUCT

Type Overview

Product Number	Description	Datasheet	Page
RLE127.QAZ	Differential temperature controller, AC 230 V, 2-position output, with additional temperature sensor	N3337	1-5
RLE132	Immersion temperature controller, AC 230 V, 3-position output	N3334	1-6
RLE162	Immersion temperature controller, AC 24 V, DC 0...10 V output	N3333	1-7
RLM162	Air duct temperature controller, AC 24 V, 2 outputs DC 0...10 V	N3332	1-49
RLU202	Universal controller, 1 control loop, 2 relay outputs	N3101	1-53
RLU220	Universal controller, 1 control loop, 2 analog outputs	N3101	1-53
RLU222	Universal controller, 2 control loops, 2 analog and 2 relay outputs	N3101	1-53
RLU232	Universal controller, 2 control loops, 3 analog and 2 relay outputs	N3101	1-53
RLU236	Universal controller, 2 control loops, 3 analog and 6 relay outputs	N3101	1-53
RMB795B-1	Central control unit RMB795B-1 with languages de, fr, it, es, pt	N3122	3-20
RMB795B-2	Central control unit RMB795B-2 with languages de, fr, nl, en	N3122	3-20
RMB795B-3	Central control unit RMB795B-3 with languages da, fi, no, sv	N3122	3-20
RMB795B-4	Central control unit RMB795B-4 with languages cs, sk, pl, hu, ru, bg	N3122	3-20
RMB795B-5	Central control unit RMB795B-5 with languages ro, sl, sr, hr, el, tr	N3122	3-20
RMB795B-6	Central control unit RMB795B-6 with language zh	N3122	3-20
RMH760B-1	Heating controller with languages de, fr, it, es	N3133	1-30
RMH760B-2	Heating controller with languages de, en, fr, nl	N3133	1-30
RMH760B-3	Heating controller with languages da, fi, sv, no	N3133	1-30
RMH760B-4	Heating controller with languages pl, cs, sk, hu, ru, bg	N3133	1-30
RMH760B-5	Heating controller with languages sr, hr, sl, ro, el, tr	N3133	1-30
RMK770-1	Boiler sequence controller with languages de, fr, it, es	N3132	1-32
RMK770-2	Boiler sequence controller with languages de, fr, en, nl	N3132	1-32
RMK770-3	Boiler sequence controller with languages da, fi, sv, no	N3132	1-32
RMK770-4	Boiler sequence controller with languages pl, cs, sk, hu, ru, bg	N3132	1-32
RMK770-5	Boiler sequence controller with languages sr, hr, sl, ro, el, tr	N3132	1-32
RMS705B-1	Switching and monitoring device with languages de, fr, it, es, pt	N3124	1-73
RMS705B-2	Switching and monitoring device with languages de, fr, nl, en	N3124	1-73
RMS705B-3	Switching and monitoring device with languages da, fi, no, sv	N3124	1-73
RMS705B-4	Switching and monitoring device with languages pl, cs, hu, ru, sk, bg	N3124	1-73
RMS705B-5	Switching and monitoring device with languages el, ro, sl, sr, hr, tr	N3124	1-73
RMS705B-6	Switching and monitoring device with language zh	N3124	1-73
RMU710B-1	Universal controller, 1 control loop, with languages de, fr, it, es	N3150	1-62
RMU710B-2	Universal controller, 1 control loop, with languages de, en, fr, nl	N3150	1-62
RMU710B-3	Universal controller, 1 control loop, with languages da, fi, sv, no	N3150	1-62
RMU710B-4	Universal controller, 1 control loop, with languages cs, hu, pl, sk, ru, bg	N3150	1-62
RMU710B-5	Universal controller, 1 control loop, with languages sr, hr, sl, ro, el, tr	N3150	1-62
RMU710B-6	Universal controller, 1 control loop, with language zh	N3150	1-62
RMU720B-1	Universal controller, 2 control loops, with languages de, fr, it, es	N3150	1-62
RMU720B-2	Universal controller, 2 control loops, with languages de, en, fr, nl	N3150	1-62
RMU720B-3	Universal controller, 2 control loops, with languages da, fi, sv, no	N3150	1-62
RMU720B-4	Universal controller, 2 control loops, with languages cs, hu, pl, sk, ru, bg	N3150	1-62
RMU720B-5	Universal controller, 2 control loops, with languages sr, hr, sl, ro, el, tr	N3150	1-62
RMU720B-6	Universal controller, 2 control loops, with language zh	N3150	1-62
RMU730B-1	Universal controller, 3 control loops, with languages de, fr, it, es	N3150	1-62
RMU730B-2	Universal controller, 3 control loops, with languages de, en, fr, nl	N3150	1-62
RMU730B-3	Universal controller, 3 control loops, with languages da, fi, sv, no	N3150	1-62
RMU730B-4	Universal controller, 3 control loops, with languages cs, hu, pl, sk, ru, bg	N3150	1-62
RMU730B-5	Universal controller, 3 control loops, with languages sr, hr, sl, ro, el, tr	N3150	1-62
RMU730B-6	Universal controller, 3 control loops, with language zh	N3150	1-62
RMZ780	Module connector	N3138	1-39
RMZ782B	Heating circuit module	N3136	1-38
RMZ783B	DHW module	N3136	1-39
RMZ785	Universal module (8UI)	N3146	1-38
RMZ787	Universal module (4UI, 4DO)	N3146	1-38
RMZ788	Universal module (4UI, 2AO, 2DO)	N3146	1-38
RMZ789	Universal module (6UI, 2AO, 4DO)	N3146	1-38

NEW PRODUCT

Type Overview

Product Number	Description	Datasheet	Page
RMZ790	Plug-in type operator unit	N3111	1-37
RMZ791	Detached operator unit with 3 m cable	N3112	1-37
RMZ792	Bus operator unit	N3113	1-37
RRV912	Heating circuit controller, 2 heating circuits	N2705	4-12
RRV918	Heating circuit controller, 8 heating circuits	N2706	4-13
RRV934	Multicontroller	N2709	4-14
RTN51	Thermostatic actuator, RAL 9016, matt	N2111	7-25
RTN51G	Thermostatic actuator, RAL 9016, glossy	N4211	7-25
RTN71	Thermostatic actuator with remote sensor	N2111	7-25
RTN81	Thermostatic actuator with remote adjuster	N2111	7-25
RVD120-A	Controller, 3 programmed plant types, instructions in da, de, en, fi, fr, it, sv	N2510	1-41
RVD120-C	Controller, 3 programmed plant types, instructions in bg, cs, el, pl, ro, ru	N2510	1-41
RVD140-A	Controller, 8 programmed plant types, instructions in da, de, en, fi, fr, it, sv	N2510	1-42
RVD140-C	Controller, 8 programmed plant types, instructions in bg, cs, el, pl, ro, ru	N2510	1-42
RVD250-A	Controller, 28 programmed plant types, instructions in de, en, fr, it, da, fi, sv	N2513	1-46
RVD250-C	Controller, 28 programmed plant types, instructions in pl, cs, el, ru, bg, ro	N2513	1-46
RVD260-A	Controller, 14 programmed plant types, instructions in de, en, fr, it, da, fi, sv	N2515	1-46
RVD260-C	Controller, 14 programmed plant types, instructions in pl, cs, el, ru, bg, ro	N2515	1-46
RVL479	Heating controller for a second heating circuit	N2543	1-24
RVL480	Heating controller for 1 heating circuit or boiler temperature control	N2540	1-21
RVL481	Heating controller for boiler temperature control and d.h.w. heating	N2541	1-22
RVL482	Heating controller for boiler temperature control for modulating or 2-stage burners with d.h.w. heating	N2542	1-23
RVP201.0	Heating controller without time switch	N2464	1-11
RVP201.1	Heating controller with analog 24-hour time switch	N2464	1-11
RVP211.0	Heating controller without time switch, with d.h.w. heating	N2464	1-12
RVP211.1	Heating controller with analog 24-hour time switch, with d.h.w. heating	N2464	1-12
RVP340	Heating controller for 1 heating circuit	N2545	1-17
RVP350	Heating controller for 1 heating circuit and d.h.w.	N2545	1-18
RVP351	Heating controller for 1 heating circuit and d.h.w., without communication	N2545	1-15
RVP360	Heating controller for 2 heating circuits and d.h.w.	N2546	1-19
RVP361	Heating controller for 2 heating circuits and d.h.w., without communication	N2546	1-15
RWD32	Universal controller, AC 230 V, with 2 relay outputs	N3341	1-58
RWD32S	Differential temperature controller, AC 230 V, with 2 relay outputs	N3344	1-9
RWD34	Temperature controller, AC 230 V, heat pump 3-stage, heating and cooling 2-stage	N3346	1-60
RWD44	Temperature controller, AC 24 V, heat pump 3-stage, heating and cooling 2-stage	N3346	1-60
RWD62	Universal controller, AC 24 V, 2 modulating outputs	N3342	1-58
RWD68	Universal controller, AC 24 V, 1 modulating and 1 2-point output	N3343	1-58
RWD82	Universal controller, AC 24 V, with 2 relay outputs	N3341	1-58
RXB21.1/FC-10	Room controller for 3-speed fan	N3873	3-15
RXB21.1/FC-11	Room controller for 3-speed fan	N3873	3-15
RXB22.1/FC-12	Room controller with 3-speed fan and electric heating coil	N3873	3-15
RXB24.1/CC-02	Room controller for chilled ceilings and radiators	N3874	3-15
RXB39.1/FC-13	Communicating room controller for fan-coil applications with KNX communication	N3875	3-16
RXC10.5/00010	Radiator, chilled ceilings and VAV room controller with LonWorks communication and basic application OOO10	N3830	3-21
RXC20.5/00020	Room controller for fan coils with 1-speed fan or chilled ceiling/radiator with basic application OOO20	N3834	3-22
RXC21.5/00021	Room controller for fan coils with 3-speed fan and/or outside air damper with basic application OOO21	N3834	3-22
RXC22.5/00022	Room controller for fan coils with 3-speed fan and electric reheater with basic application OOO22	N3834	3-22
RXC30.5/00030	Radiators, chilled ceilings, lighting, base module with LonWorks communication, basic application 00030	N3840	3-24
RXC31.5/00031	VAV base module with LonWorks communication, basic application 00031	N3844	3-25
RXC32.5/00032	VAV room controller with LonWorks communication, basic application 00032	N3845	3-26
RXC39.5/00039	Communicating room controller, with LonMark compatible bus communication	N3856	3-23
RXC40.5	Extension module for lighting control	N3842	3-27

NEW PRODUCT

Type Overview

Product Number	Description	Datasheet	Page
RXC41.5	Extension module for blinds control	N3843	3-27
RXL21.1/FC-10	Room controller for 3-speed fan	N3877	3-11
RXL21.1/FC-11	Room controller for 3-speed fan	N3877	3-11
RXL22.1/FC-12	Room controller with 3-speed fan and electric heating coil	N3877	3-11
RXL24.1/CC-02	Room controller for chilled ceilings and radiators	N3878	3-11
RXL39.1/FC-13	Communicating room controller for fan-coil applications with proprietary communication	N3876	3-12
RXT20.1	Service unit with LCD	N3851	3-14
RXZ20.1	Terminal cover for RXA2../ RXB2../ RXL2../ RXC2..	N3834	3-12
RXZ30.1	Terminal cover for RXB3.. / RXL3.. / RXC3..	N3840	3-12
RXZ40.1	Terminal cover for RXC4.. and AQX2000	N3842	3-27
RXZ90.1	Receiver for wireless room operator units with PPS2 interface	N1644	3-34
RXZ95.1/LON	Radio frequency receiver with Gateway EnOcean/LonWorks, AC / DC 24 V, external antenna	N1661	3-37
RXZ97.1/KNX	Radio frequency receiver with Gateway EnOcean/KNX, powered via KNX bus	N1662	3-37
RYT182	Changeover thermostat, changeover, 30 °C / 19 °C, IP54	N1295	5-60
SAL31.00T10	Electromotoric actuator 10 Nm, 90°, AC 230 V, 3P	N4502	7-177
SAL31.03T10	Electromotoric actuator 10 Nm, 90°, AC 230 V, 3P, 30 s	N4502	7-177
SAL61.00T10	Electromotoric actuator 10 Nm, 90°, AC/DC 24 V, DC 0...10 V / DC 4...20 mA	N4502	7-177
SAL61.03T10	Electromotoric actuator 10 Nm, 90°, AC/DC 24 V, DC 0...10 V / DC 4...20 mA, 30 s	N4502	7-177
SAL81.00T10	Electromotoric actuator 10 Nm, 90°, AC/DC 24 V, 3P	N4502	7-177
SAL81.03T10	Electromotoric actuator 10 Nm, 90°, AC/DC 24 V, 3P, 30 s	N4502	7-177
SAX31.00	Electromotoric actuator, 800 N, 20 mm, AC 230 V, 3P	N4501	7-49
SAX31.03	Electromotoric actuator, 800 N, 20 mm, AC 230 V, 3P, 30 s	N4501	7-49
SAX61.03	Electromotoric actuator, 800 N, 20 mm, AC/DC 24 V, DC 0...10 V / DC 4...20 mA, 30 s	N4501	7-49
SAX81.00	Electromotoric actuator, 800 N, 20 mm, AC/DC 24 V, 3P	N4501	7-49
SAX81.03	Electromotoric actuator, 800 N, 20 mm, AC/DC 24 V, 3P, 30 s	N4501	7-49
SBV31	Electromotoric actuator, AC 230 V, 3-position	N4519	7-51
SBV61	Electromotoric actuator, AC 24 V, DC 0...10 V	N4519	7-51
SBV81	Electromotoric actuator, AC 24 V, 3-position	N4519	7-51
SBX31	Electromotoric actuator, AC 230 V, 3-position	N4519	7-50
SBX61	Electromotoric actuator, AC 24 V, DC 0...10 V	N4519	7-50
SBX81	Electromotoric actuator, AC 24 V, 3-position	N4519	7-50
SEA45.1	Current valve	N4937	1-79
SED2-1.1/35B	Variable speed drive with B filter; 1.1 kW; 3 A; 3 x AC 400 V; IP54	N5192	9-6
SED2-3/35X	Variable speed drive without B filter; 3 kW; 7.7 A; 3 x AC 400 V; IP54	N5192	9-7
SEH62.1	Digital time switch, 1-channel, with 7-day program	N5243	1-83
SEM61.4	Signal converter DC 0...10 V or DC 0 / 10 V in AC 0 / 24 V	N5102	1-79
SEM62.1	Transformer	N5536	1-84
SEM62.2	Transformer with switch and replaceable fuse	N5536	1-84
SEZ16	High current switching relay, maximum 16 A resistive		5-16
SEZ220	Signal converter with preprogrammed applications	N5146	1-80
SEZ31.1	Auxiliary module, variable positioning time for SQL36E..	N4505	7-181
SEZ50MB	Modbus interface for RWD	N3099	1-82
SEZ91.6	Signal converter DC 0...20 V Phs to DC 0...10 V	N5143	1-79
SFA21	Electromotoric actuator, 200 N, 2.5 mm, AC 230 V, 2P		7-40
SFA21/18	Electromotoric actuator, 200 N, 2.5 mm, AC 230 V, 2P	N4863	7-40
SFA71/18	Electromotoric actuator, 200 N, 2.5 mm, AC 230 V, 2P	N4863	7-40
SFP21/18	Electromotoric actuator, 135 N, 2.5 mm, AC 230 V, 2P	N4865	7-35
SFP71/18	Electromotoric actuator, 135 N, 2.5 mm, AC 24 V, 2P	N4865	7-35
SKB32.50	Electrohydraulic actuator, 2800 N, 20 mm, AC 230 V, 3P	N4564	7-54
SKB32.51	Electrohydraulic actuator, 2800 N, 20 mm, AC 230 V, 3P, spring return	N4564	7-54
SKB60	Electrohydraulic actuator, 2800 N, 20 mm, AC 24 V, DC 0...10 V/4...20 mA	N4564	7-55
SKB62	Electrohydraulic actuator, 2800 N, 20 mm, AC 24 V, DC 0...10 V/4...20 mA, spring return	N4564	7-55
SKB62U	Electrohydraulic actuator, 2800 N, 20 mm, AC 24 V, DC 0...10 V/4...20 mA, spring return, UL	N4564	7-55

NEW PRODUCT

Type Overview

Product Number	Description	Datasheet	Page
SKB62UA	Electrohydraulic actuator, 2800 N, 20 mm, AC 24 V, DC 0...10 V/4...20 mA, spring return, UL	N4564	7-55
SKB82.50	Electrohydraulic actuator, 2800 N, 20 mm, AC 24 V, 3P	N4564	7-54
SKB82.50U	Electrohydraulic actuator, 2800 N, 20 mm, AC 24 V, 3P, UL	N4564	7-54
SKB82.51	Electrohydraulic actuator, 2800 N, 20 mm, AC 24 V, 3P, spring return	N4564	7-54
SKB82.51U	Electrohydraulic actuator, 2800 N, 20 mm, AC 24 V, 3P, spring return, UL	N4564	7-54
SKC32.60	Electrohydraulic actuator, 2800 N, 40 mm, AC 230 V, 3P	N4566	7-56
SKC32.61	Electrohydraulic actuator, 2800 N, 40 mm, AC 230 V, 3P, spring return	N4566	7-56
SKC60	Electrohydraulic actuator, 2800 N, 40 mm, AC 24 V, DC 0...10 V/4...20 mA	N4566	7-57
SKC62	Electrohydraulic actuator, 2800 N, 40 mm, AC 24 V, DC 0...10 V/4...20 mA, spring return	N4566	7-57
SKC62U	Electrohydraulic actuator, 2800 N, 40 mm, AC 24 V, DC 0...10 V/4...20 mA, spring return, UL	N4566	7-57
SKC62UA	Electrohydraulic actuator, 2800 N, 40 mm, AC 24 V, DC 0...10 V/4...20 mA, spring return, UL	N4566	7-57
SKC82.60	Electrohydraulic actuator, 2800 N, 40 mm, AC 24 V, 3P	N4566	7-56
SKC82.60U	Electrohydraulic actuator, 2800 N, 40 mm, AC 24 V, 3P, UL	N4566	7-56
SKC82.61	Electrohydraulic actuator, 2800 N, 40 mm, AC 24 V, 3P, spring return	N4566	7-56
SKC82.61U	Electrohydraulic actuator, 2800 N, 40 mm, AC 24 V, 3P, spring return, UL	N4566	7-56
SKD32.21	Electrohydraulic actuator, 1000 N, 20 mm, AC 230 V, 3P, spring return	N4561	7-52
SKD32.50	Electrohydraulic actuator, 1000 N, 20 mm, AC 230 V, 3P	N4561	7-52
SKD32.51	Electrohydraulic actuator, 1000 N, 20 mm, AC 230 V, 3P, spring return	N4561	7-52
SKD60	Electrohydraulic actuator, 1000 N, 20 mm, AC 24 V, DC 0...10/V 4...20 mA	N4561	7-53
SKD62	Electrohydraulic actuator, 1000 N, 20 mm, AC 24 V, DC 0...10 V/4...20 mA, spring return	N4561	7-53
SKD62U	Electrohydraulic actuator, 1000 N, 20 mm, AC 24 V, DC 0...10 V/4...20 mA, spring return, UL	N4561	7-53
SKD62UA	Electrohydraulic actuator, 1000 N, 20 mm, AC 24 V, DC 0...10 V/4...20 mA, spring return, UL	N4561	7-53
SKD82.50	Electrohydraulic actuator, 1000 N, 20 mm, AC 24 V, 3P	N4561	7-52
SKD82.50U	Electrohydraulic actuator, 1000 N, 20 mm, AC 24 V, 3P, UL	N4561	7-52
SKD82.51	Electrohydraulic actuator, 1000 N, 20 mm, AC 24 V, 3P, spring return	N4561	7-52
SKD82.51U	Electrohydraulic actuator, 1000 N, 20 mm, AC 24 V, 3P, spring return, UL	N4561	7-52
SQD35.00	Electromotoric actuators, > 400 N, 6.5 mm, AC 230 V, 3P	N4540	7-48
SQD65	Electromotoric actuators, > 400 N, 6.5 mm, AC 24 V, DC 0...10 V	N4540	7-48
SQD85.03	Electromotoric actuators, > 400 N, 6.5 mm, AC 24 V, 3P	N4540	7-48
SQK33.00	Electromotoric actuator, 5 Nm, 90°, AC 230 V, 3P	N4506	7-178
SQK34.00	Electromotoric actuator, 5 Nm, 90°, AC 230 V, 3P	N4508	7-178
SQK84.00	Electromotoric actuator, 5 Nm, 90°, AC 24 V, 3P	N4508	7-178
SQL321B1400	Electromotoric actuator, 2P, 1400 Nm	N4520	7-180
SQL321B150	Electromotoric actuator, 2P, 150 Nm	N4520	7-180
SQL321B25	Electromotoric actuator, 2P, 25 Nm	N4520	7-180
SQL321B2650	Electromotoric actuator, 2P, 2650 Nm	N4520	7-180
SQL321B270	Electromotoric actuator, 2P, 270 Nm	N4520	7-180
SQL321B50	Electromotoric actuator, 2P, 50 Nm	N4520	7-180
SQL321B570	Electromotoric actuator, 2P, 570 Nm	N4520	7-180
SQL35.00	Electromotoric actuator, 40 Nm, 90°, AC 230 V, 3P	N4505	7-178
SQL361B1400	Electromotoric actuator, DC 0...10 V, 1400 Nm	N4520	7-180
SQL361B150	Electromotoric actuator, DC 0...10 V, 150 Nm	N4520	7-180
SQL361B2650	Electromotoric actuator, DC 0...10 V, 2650 Nm	N4520	7-180
SQL361B270	Electromotoric actuator, DC 0...10 V, 270 Nm	N4520	7-180
SQL361B50	Electromotoric actuator, DC 0...10 V, 50 Nm	N4520	7-180
SQL361B570	Electromotoric actuator, DC 0...10 V, 570 Nm	N4520	7-180
SQL36E110	Electromotoric actuator 400 Nm, 90°, AC 230 V, 3P	N4505	7-181
SQL36E160	Electromotoric actuator, 1200 Nm, 90°, AC 230 V, 3P	N4505	7-181
SQL36E50F04	Electromotoric actuator, 40 Nm, 90°, AC 230 V, 3P, F04 connection	N4505	7-181
SQL36E50F05	Electromotoric actuator, 40 Nm, 90°, AC 230 V, 3P, F05 connection	N4505	7-181
SQL36E65	Electromotoric actuator 100 Nm, 90°, AC 230 V, 3P	N4505	7-181

NEW PRODUCT

Type Overview

Product Number	Description	Datasheet	Page
SQL85.00	Electromotoric actuator, 20 Nm, 90°, AC 24 V, 3P	N4505	7-178
SQS35.00	Electromotoric actuator, 400 N, 5.5 mm, AC 230 V, 3P	N4573	7-47
SQS35.03	Electromotoric actuator, 400 N, 5.5 mm, AC 230 V, 3P	N4573	7-47
SQS35.50	Electromotoric actuator, 400 N, 5.5mm, AC 230 V, 3P, spring return	N4573	7-47
SQS35.53	Electromotoric actuator, 400 N, 5.5 mm, AC 230 V, 3P, spring return	N4573	7-47
SQS65	Electromotoric actuator, 400 N, 5.5 mm, AC 24 V, DC 0...10 V	N4573	7-47
SQS65.2	Electromotoric actuator, 400 N, 5.5 mm, AC 24 V, DC 2...10 V	N4573	7-47
SQS65.5	Electromotoric actuator, 400 N, 5.5 mm, AC 24 V, DC 0...10 V, spring return	N4573	7-47
SQS85.00	Electromotoric actuator, 400 N, 5.5 mm, AC 24 V, 3P	N4573	7-47
SQS85.03	Electromotoric actuator, 400 N, 5.5 mm, AC 24 V, 3P	N4573	7-47
SSA31	Electromotoric actuator, 100 N, 2.5/5 mm, 1.5 m, AC 230 V, 3P	N4893	7-26
SSA31/00	Electromotoric actuator, 100 N, 2.5/5 mm, no cable, AC 230 V, 3P	N4893	7-26
SSA31.04	Electromotoric actuator, 160 N, 2.5 mm, 1.5 m, AC 230 V, 3P, SPDT	N4860	7-36
SSA31.1	Electromotoric actuator, 100 N, 2.5/5 mm, 1.5 m, AC 230 V, 3P, auxiliary switch	N4893	7-26
SSA61	Electromotoric actuator, 100 N, 2.5/5 mm, AC/DC 24 V, 1.5 m, DC 0...10 V	N4893	7-26
SSA61/00	Electromotoric actuator, 100 N, 2.5/5 mm, AC/DC 24 V, no cable, DC 0...10 V	N4893	7-26
SSA81	Electromotoric actuator, 100 N, 2.5/5 mm, 1.5 m, AC 24 V, 3P	N4893	7-26
SSA81/00	Electromotoric actuator, 100 N, 2.5/5 mm, no cable, AC 24 V, 3P	N4893	7-26
SSA81.1	Electromotoric actuator, 100 N, 2.5/5 mm, AC 24 V, no cable, 3P, auxiliary switch	N4893	7-26
SSA955	Radiator control actuator	N2700	4-11
SSB31	Electromotoric actuator, 200 N, 5.5 mm, AC 230 V, 1.5 m, 3P	N4891	7-41
SSB31/00	Electromotoric actuator, 200 N, 5.5 mm, AC 230 V, no cable, 3P	N4891	7-41
SSB31.1	Electromotoric actuator, 200 N, 5.5 mm, AC 230 V, 1.5 m, 3P, auxiliary switch	N4891	7-41
SSB61	Electromotoric actuator, 200 N, 5.5 mm, AC/DC 24 V, 1.5 m, DC 0...10 V	N4891	7-41
SSB61/00	Electromotoric actuator, 200 N, 5.5 mm, AC/DC 24 V, no cable, DC 0...10 V	N4891	7-41
SSB81	Electromotoric actuator, 200 N, 5.5 mm, AC 24 V, 1.5 m, 3P	N4891	7-41
SSB81/00	Electromotoric actuator, 200 N, 5.5 mm, AC 24 V, no cable, 3P	N4891	7-41
SSB81.1	Electromotoric actuator, 200 N, 5.5 mm, AC 24 V, 1.5 m, 3P, auxiliary switch	N4891	7-41
SSC31	Electromotoric actuator, 300 N, 5.5 mm, AC 230 V, 3P	N4895	7-46
SSC61	Electromotoric actuator, 300 N, 5.5 mm, AC/DC 24 V, DC 0...10 V	N4895	7-46
SSC61.5	Electromotoric actuator, 300 N, 5.5 mm, AC/DC 24 V, DC 0...10 V, fail-safe	N4895	7-46
SSC81	Electromotoric actuator, 300 N, 5.5 mm, AC 24 V, 3P	N4895	7-46
SSD31	Electromotoric actuator, 250 N, 5.5 mm, 1.5 m, AC 230 V, 3P	N4861	7-43
SSD31/00	Electromotoric actuator, 250 N, 5.5 mm, no cable, AC 230 V, 3P	N4861	7-43
SSD61	Electromotoric actuator, 250 N, 5.5 mm, 1.5 m, AC/DC 24 V, DC 0...10 V	N4861	7-43
SSD61/00	Electromotoric actuator, 250 N, 5.5 mm, no cable, AC/DC 24 V, DC 0...10 V	N4861	7-43
SSD61.2	Electromotoric actuators, 250 N, 5.5 mm, 1.5 m, AC/DC 24 V, DC 2...10 V	N4861	7-43
SSD61.2/00	Electromotoric actuators, 250 N, 5.5 mm, no cable, AC/DC 24 V, DC 2...10 V	N4861	7-43
SSD61.5	Electromotoric actuator, 250 N, 5.5 mm, AC/DC 24 V, DC 0...10 V, with fail-safe function	N4861	7-43
SSD61EP	Electromotoric actuators, 250 N, 5.5 mm, 1.5 m, AC/DC 24 V, DC 0...10 V, equal-percentage characteristic	N4861	7-43
SSD61EP/00	Electromotoric actuators, 250 N, 5,5 mm, no cable, AC/DC 24 V, DC 0...10 V, equal-percentage characteristic	N4861	7-43
SSD81	Electromotoric actuator, 250 N, 5.5 mm, 1.5 m, AC 24 V, 3P	N4861	7-43
SSD81/00	Electromotoric actuator, 250 N, 5.5 mm, no cable, AC 24 V, 3P	N4861	7-43
SSD81.5	Electromotoric actuator, 250 N, 5.5 mm, AC/DC 24 V, 3-position, fail-safe function	N4861	7-43
SSP31	Electromotoric actuator, 160 N, 2.5 mm, 1.5 m, AC 230 V, 3P	N4864	7-37
SSP31/00	Electromotoric actuator, 160 N, 2.5 mm, no cable, AC 230 V, 1.5 m, 3P	N4864	7-38
SSP61	Electromotoric actuator, 160 N, 2.5 mm, 1.5 m, AC/DC 24 V, DC 0...10 V	N4864	7-38
SSP61/00	Electromotoric actuator, 160 N, 2.5 mm, no cable, AC/DC 24 V, DC 0...10 V	N4864	7-38
SSP81	Electromotoric actuator, 160 N, 2.5 mm, 1.5 m, AC 24 V, 3P	N4864	7-38
SSP81/00	Electromotoric actuator, 160 N, 2.5 mm, no cable, AC 24 V, 3P	N4864	7-38
SSP81.04	Electromotoric actuator, 160 N, 2.5 mm, 1.5 m, AC 24 V, 3P	N4864	7-38
SSP81.04/00	Electromotoric actuator, 160 N, 2.5 mm, no cable, AC 24 V, 3P	N4864	7-38
SSY31	Electromotoric actuator, 250 N, 5.5 mm, AC 230 V, 1.5 m, 3P	N4894	7-45
SSY81	Electromotoric actuator, 250 N, 5.5 mm, AC 24 V, 1.5 m, 3P	N4894	7-45

NEW PRODUCT

Type Overview

Product Number	Description	Datasheet	Page
STA21	Electrothermal actuator, 105 N, 1.2 m, AC 230 V, 2P	N4877	7-94
STA23	Electrothermal actuator, AC 230 V, NC, 2P, 1 m	N4884	7-29
STA23/00	Electrothermal actuator, AC 230 V, NC, 2P	N4884	7-29
STA23B/00	Electrothermal actuator, AC 230 V, NC, 2P, black	N4884	7-29
STA23HD	Electrothermal actuator, AC 230 V, HD, 2P, 0.8 m	N4884	7-29
STA23MP/00	Electrothermal actuator, AC 230 V, NC, 2P, MP	N4884	7-29
STA63	Electrothermal actuator, AC 24 V, NC, DC 0...10 V, 2 m	N4884	7-29
STA73	Electrothermal actuator, AC/DC 24 V, NC, 2P, PDM, 1 m	N4884	7-29
STA73/00	Electrothermal actuator, AC/DC 24 V, NC, 2P, PDM	N4884	7-29
STA73B/00	Electrothermal actuator, AC/DC 24 V, NC, 2P, PDM, black	N4884	7-29
STA73HD	Electrothermal actuator, AC/DC 24 V, HD, 2P, 0.8 m	N4884	7-29
STA73MP/00	Electrothermal actuator, AC/DC 24 V, NC, 2P, PDM, MP	N4884	7-29
STA73PR/00	Electrothermal actuator, AC/DC 24 V, NC, 2P, PDM, PR	N4884	7-29
STP23	Electrothermal actuator, AC 230 V, NO, 2P, 1 m	N4884	7-32
STP23/00	Electrothermal actuator, AC 230 V, NO, 2P	N4884	7-32
STP23B/00	Electrothermal actuator, AC 230 V, NO, 2P, black	N4884	7-32
STP63	Electrothermal actuator, AC 24 V, NO, DC 0...10 V, 2 m	N4884	7-32
STP73	Electrothermal actuator, AC/DC 24 V, NO, 2P, 1 m	N4884	7-32
STP73/00	Electrothermal actuator, AC/DC 24 V, NO, 2P, PDM	N4884	7-32
STP73B/00	Electrothermal actuator, AC/DC 24 V, NO, 2P, PDM, black	N4884	7-32
STP73PR/00	Electrothermal actuator, AC/DC 24 V, NO, 2P, PDM, PR	N4884	7-32
SUA21/1	Electromotoric actuator, 150 N, 1.5 m, AC 230 V, 2P	N4830	7-37
TKM2	Thermal reset limit thermostat for air ducts, 20...110 °C; perforated protection pocket 200mm	N1291	5-60
TRG2	Room thermostat with helix sensor, TR -5..50 °C	N1329	5-67
TRG22	Room thermostat with helix sensor, TR -5..50 °C, 2 switches on 2 steps 2..12 K difference	N1329	5-67
UA1T	Power amplifier for thermal actuators AC 24 V, PWM	N3591	1-80
UH50-A05C-EN06-F 0B-B000-M3A	Heat meter, standard type, 0.6 m³/h, threaded connection	UH 106-000	10-21
UH50-A07C-EN06-F 0B-B000-M3A	Heat meter, standard type, 0.6 m³/h, threaded connection	UH 106-000	10-21
UH50-A08C-EN06-E 0B-B000-M3A	Heat meter, standard type, 0.6 m³/h, flanged connection	UH 106-000	10-22
UH50-A21C-EN06-F 0B-B000-M3A	Heat meter, standard type, 1.5 m³/h, threaded connection	UH 106-000	10-21
UH50-A23C-EN06-F 0B-B000-M3A	Heat meter, standard type, 1.5 m³/h, threaded connection	UH 106-000	10-21
UH50-A24C-EN06-E 0B-B000-M3A	Heat meter, standard type, 1.5 m³/h, flanged connection	UH 106-000	10-22
UH50-A36C-EN06-F 0B-B000-M3A	Heat meter, standard type, 2.5 m³/h, threaded connection	UH 106-000	10-21
UH50-A38C-EN06-F 0B-B000-M3A	Heat meter, standard type, 2.5 m³/h, threaded connection	UH 106-000	10-21
UH50-A39C-EN06-E 0B-B000-M3A	Heat meter, standard type, 2.5 m³/h, flanged connection	UH 106-000	10-22
UH50-A45C-EN06-E 0B-B000-M3A	Heat meter, standard type, 3.5 m³/h, threaded connection	UH 106-000	10-21
UH50-A46C-EN06-E 0B-B000-M3A	Heat meter, standard type, 3.5 m³/h, flanged connection	UH 106-000	10-22
UH50-A50C-EN06-E 0B-B000-M2A	Heat meter, standard type, 6 m³/h, threaded connection	UH 106-000	10-21
UH50-A52C-EN06-E 0B-B000-M2A	Heat meter, standard type, 6 m³/h, flanged connection	UH 106-000	10-22
UH50-A60C-EN06-E 0M-B000-M2A	Heat meter, standard type, 10 m³/h, threaded connection	UH 106-000	10-21
UH50-A61C-EN06-E 0M-B000-M2A	Heat meter, standard type, 10 m³/h, flanged connection	UH 106-000	10-22
UH50-A65C-EN06-E 0M-B000-M2B	Heat meter, standard type, 15 m³/h, flanged connection	UH 106-000	10-22

NEW PRODUCT

Type Overview

Product Number	Description	Datasheet	Page
UH50-A70C-EN06-E 0M-B000-M2B	Heat meter, standard type, 25 m³/h, flanged connection	UH 106-000	10-22
UH50-A74C-EN06-E 0P-B000-M2B	Heat meter, standard type, 40 m³/h, flanged connection	UH 106-000	10-22
UH50-A82C-EN06-E 0P-B000-M2B	Heat meter, standard type, 60 m³/h, flanged connection	UH 106-000	10-22
UH50-A83C-EN06-E 0P-B000-M2B	Heat meter, standard type, 60 m³/h, flanged connection	UH 106-000	10-22
VAF51.100-160	2-port ball valve, flanged, PN25, DN100, kvs 160	N4120	7-182
VAF51.125-200	2-port ball valve, flanged, PN25, DN125, kvs 200	N4120	7-182
VAF51.150-360	2-port ball valve, flanged, PN25, DN150, kvs 360	N4120	7-182
VAF51.65-63	2-port ball valve, flanged, PN25, DN65, kvs 63	N4120	7-182
VAF51.80-100	2-port ball valve, flanged, PN25, DN80, kvs 100	N4120	7-182
VAI61.15-1	2-port ball valve, internal thread, PN40, DN15, kvs 1	N4211	7-183
VAI61.15-1.6	2-port ball valve, internal thread, PN40, DN15, kvs 1.6	N4211	7-183
VAI61.15-10	2-port ball valve, internal thread, PN40, DN15, kvs 10	N4211	7-183
VAI61.15-2.5	2-port ball valve, internal thread, PN40, DN15, kvs 2.5	N4211	7-183
VAI61.15-4	2-port ball valve, internal thread, PN40, DN15, kvs 4	N4211	7-183
VAI61.15-6.3	2-port ball valve, internal thread, PN40, DN15, kvs 6.3	N4211	7-183
VAI61.20-10	2-port ball valve, internal thread, PN40, DN20, kvs 10	N4211	7-183
VAI61.20-4	2-port ball valve, internal thread, PN40, DN20, kvs 4	N4211	7-183
VAI61.20-6.3	2-port ball valve, internal thread, PN40, DN20, kvs 6.3	N4211	7-183
VAI61.25-10	2-port ball valve, internal thread, PN40, DN25, kvs 10	N4211	7-183
VAI61.25-16	2-port ball valve, internal thread, PN40, DN25, kvs 16	N4211	7-183
VAI61.25-6.3	2-port ball valve, internal thread, PN40, DN25, kvs 6.3	N4211	7-183
VAI61.32-10	2-port ball valve, internal thread, PN40, DN32, kvs 10	N4211	7-183
VAI61.32-16	2-port ball valve, internal thread, PN40, DN32, kvs 16	N4211	7-183
VAI61.32-25	2-port ball valve, internal thread, PN40, DN32, kvs 25	N4211	7-183
VAI61.40-16	2-port ball valve, internal thread, PN40, DN40, kvs 16	N4211	7-183
VAI61.40-25	2-port ball valve, internal thread, PN40, DN40, kvs 25	N4211	7-183
VAI61.40-40	2-port ball valve, internal thread, PN40, DN40, kvs 40	N4211	7-183
VAI61.50-25	2-port ball valve, internal thread, PN40, DN50, kvs 25	N4211	7-183
VAI61.50-40	2-port ball valve, internal thread, PN40, DN50, kvs 40	N4211	7-183
VAI61.50-63	2-port ball valve, internal thread, PN40, DN50, kvs 63	N4211	7-183
VBF21.100	3-port slipper valve, flanged, PN6, DN100, kvs 160	N4241	7-188
VBF21.125	3-port slipper valve, flanged, PN6, DN125, kvs 550	N4241	7-188
VBF21.150	3-port slipper valve, flanged, PN6, DN150, kvs 820	N4241	7-188
VBF21.40	3-port slipper valve, flanged, PN6, DN40, kvs 25	N4241	7-188
VBF21.50	3-port slipper valve, flanged, PN6, DN50, kvs 40	N4241	7-188
VBF21.65	3-port slipper valve, flanged, PN6, DN65, kvs 63	N4241	7-188
VBF21.80	3-port slipper valve, flanged, PN6, DN80, kvs 100	N4241	7-188
VBG31.20	3-port slipper valve, external thread, PN10, DN20, kvs 6.3	N4233	7-190
VBG31.25	3-port slipper valve, external thread, PN10, DN25, kvs 10	N4233	7-190
VBG31.32	3-port slipper valve, external thread, PN10, DN32, kvs 16	N4233	7-190
VBG31.40	3-port slipper valve, external thread, PN10, DN40, kvs 25	N4233	7-190
VBI31.20	3-port slipper valve, internal thread, PN10, DN20, kvs 6.3	N4232	7-191
VBI31.25	3-port slipper valve, internal thread, PN10, DN25, kvs 10	N4232	7-191
VBI31.32	3-port slipper valve, internal thread, PN10, DN32, kvs 16	N4232	7-191
VBI31.40	3-port slipper valve, internal thread, PN10, DN40, kvs 25	N4232	7-191
VBI61.15-1.6	3-port ball valve, internal thread, PN40, DN15, kvs 1	N4211	7-186
VBI61.15-2.5	3-port ball valve, internal thread, PN40, DN15, kvs 2.5	N4211	7-186
VBI61.15-4	3-port ball valve, internal thread, PN40, DN15, kvs 4	N4211	7-186
VBI61.15-6.3	3-port ball valve, internal thread, PN40, DN15, kvs 6.3	N4211	7-186
VBI61.20-4	3-port ball valve, internal thread, PN40, DN20, kvs 4	N4211	7-186
VBI61.20-6.3	3-port ball valve, internal thread, PN40, DN20, kvs 6.3	N4211	7-186
VBI61.25-10	3-port ball valve, internal thread, PN40, DN25, kvs 10	N4211	7-186
VBI61.32-16	3-port ball valve, internal thread, PN40, DN32, kvs 16	N4211	7-186
VBI61.40-25	3-port ball valve, internal thread, PN40, DN40, kvs 25	N4211	7-186

NEW PRODUCT

Type Overview

Product Number	Description	Datasheet	Page
VBI61.50-40	3-port ball valve, internal thread, PN40, DN50, kvs 40	N4211	7-186
VCI31.20	4-port slipper valve, internal thread, PN10, DN20, kvs 6.3	N4252	7-192
VCI31.25	4-port slipper valve, internal thread, PN10, DN25, kvs 10	N4252	7-192
VCI31.32	4-port slipper valve, internal thread, PN10, DN32, kvs 16	N4252	7-192
VCI31.40	4-port slipper valve, internal thread, PN10, DN40, kvs 25	N4252	7-192
VD115CLC	2-port small valve, DIN, DN15, kv 0.25...1.9	N2103	7-97
VD120CLC	2-port small valve, DIN, DN20, kv 0.25...2.6	N2103	7-97
VD125CLC	2-port small valve, DIN, DN25, kv 0.25...2.6	N2103	7-97
VDN110	2-port radiator valve, DIN, 2-pipe system, PN10, DN10, kvs 0.09...0.63	N2105	7-91
VDN115	2-port radiator valve, DIN, 2-pipe system, PN10, DN15, kvs 0.10...0.89	N2105	7-91
VDN120	2-port radiator valve, DIN, 2-pipe system, PN10, DN20, kvs 0.31...1.41	N2105	7-91
VDN210	2-port radiator valve, NF, 2-pipe system, PN10, DN10, kvs 0.09...0.63	N2106	7-93
VDN215	2-port radiator valve, NF, 2-pipe system, PN10, DN15, kvs 0.10...0.89	N2106	7-93
VDN220	2-port radiator valve, NF, 2-pipe system, PN10, DN20, kvs 0.31...1.41	N2106	7-93
VEN110	Angle radiator valve, DIN, 2-pipe system, PN10, DN10, kv 0.09...0.63	N2106	7-91
VEN115	Angle radiator valve, DIN, 2-pipe system, PN10, DN15, kv 0.10...0.89	N2106	7-91
VEN120	Angle radiator valve, DIN, 2-pipe system, PN10, DN20, kv 0.31...1.41	N2106	7-91
VEN210	Angle radiator valve, NF, 2-pipe system, PN10, DN10, kvs 0.09...0.63	N2106	7-93
VEN215	Angle radiator valve, NF, 2-pipe system, PN10, DN15, kvs 0.10...0.89	N2106	7-93
VEN220	Angle radiator valve, NF, 2-pipe system, PN10, DN20, kvs 0.31...1.41	N2106	7-93
VKF41.100	Butterfly valve, flange, PN6/10/16, DN100, kvs 760	N4131	7-193
VKF41.125	Butterfly valve, flange, PN6/10/16, DN125, kvs 1000	N4131	7-193
VKF41.150	Butterfly valve, flange, PN6/10/16, DN150, kvs 2100	N4131	7-193
VKF41.200	Butterfly valve, flange, PN6/10/16, DN200, kvs 4000	N4131	7-193
VKF41.40	Butterfly valve, flange, PN6/10/16, DN40, kvs 50	N4131	7-193
VKF41.50	Butterfly valve, flange, PN6/10/16, DN50, kvs 80	N4131	7-193
VKF41.65	Butterfly valve, flange, PN6/10/16, DN65, kvs 200	N4131	7-193
VKF41.80	Butterfly valve, flange, PN6/10/16, DN80, kvs 400	N4131	7-193
VKF42.100	Butterfly valves PN16 for flanged connections, with tight shutoff	N4119	7-195
VKF42.125	Butterfly valves PN16 for flanged connections, with tight shutoff	N4119	7-195
VKF42.150	Butterfly valves PN16 for flanged connections, with tight shutoff	N4119	7-195
VKF42.200	Butterfly valves PN16 for flanged connections, with tight shutoff	N4119	7-195
VKF42.250	Butterfly valves PN16 for flanged connections, with tight shutoff	N4119	7-195
VKF42.300	Butterfly valves PN16 for flanged connections, with tight shutoff	N4119	7-195
VKF42.350	Butterfly valves PN16 for flanged connections, with tight shutoff	N4119	7-195
VKF42.400	Butterfly valves PN16 for flanged connections, with tight shutoff	N4119	7-195
VKF42.450	Butterfly valves PN16 for flanged connections, with tight shutoff	N4119	7-195
VKF42.50	Butterfly valves PN16 for flanged connections, with tight shutoff	N4119	7-195
VKF42.500	Butterfly valves PN16 for flanged connections, with tight shutoff	N4119	7-195
VKF42.600	Butterfly valves PN16 for flanged connections, with tight shutoff	N4119	7-195
VKF42.65	Butterfly valves PN16 for flanged connections, with tight shutoff	N4119	7-195
VKF42.80	Butterfly valves PN16 for flanged connections, with tight shutoff	N4119	7-195
VKF46.100	Butterfly valve, flange, PN6/10/16, DN100, kvs 800, tight shutoff	N4136	7-197
VKF46.125	Butterfly valve, flange, PN6/10/16, DN125, kvs 1010, tight shutoff	N4136	7-197
VKF46.150	Butterfly valve, flange, PN6/10/16, DN150, kvs 2100, tight shutoff	N4136	7-197
VKF46.200	Butterfly valve, flange, PN6/10/16, DN200, kvs 4000, tight shutoff	N4136	7-197
VKF46.250	Butterfly valve, flange, PN6/10/16, DN250, kvs 6400, tight shutoff	N4136	7-197
VKF46.300	Butterfly valve, flange, PN6/10/16, DN300, kvs 8500, tight shutoff	N4136	7-197
VKF46.350	Butterfly valve, flange, PN6/10/16, DN350, kvs 11500, tight shutoff	N4136	7-197
VKF46.350TS	Butterfly valve, flange, PN6/10/16, DN350, kvs 11500, tight shutoff	N4136	7-197
VKF46.40	Butterfly valve, flange, PN6/10/16, DN40, kvs 50, tight shutoff	N4136	7-197
VKF46.400	Butterfly valve, flange, PN6/10/16, DN400, kvs 14500, tight shutoff	N4136	7-197
VKF46.400TS	Butterfly valve, flange, PN6/10/16, DN400, kvs 14500, tight shutoff	N4136	7-197
VKF46.450	Butterfly valve, flange, PN6/10/16, DN450, kvs 20500, tight shutoff	N4136	7-197
VKF46.450TS	Butterfly valve, flange, PN6/10/16, DN450, kvs 20500, tight shutoff	N4136	7-197
VKF46.50	Butterfly valve, flange, PN6/10/16, DN50, kvs 85, tight shutoff	N4136	7-197
VKF46.500	Butterfly valve, flange, PN6/10/16, DN500, kvs 21000, tight shutoff	N4136	7-197

NEW PRODUCT

Type Overview

Product Number	Description	Datasheet	Page
VKF46.500TS	Butterfly valve, flange, PN6/10/16, DN500, kvs 21000, tight shutoff	N4136	7-197
VKF46.600	Butterfly valve, flange, PN6/10/16, DN600, kvs 29300, tight shutoff	N4136	7-197
VKF46.600TS	Butterfly valve, flange, PN6/10/16, DN600, kvs 29300, tight shutoff	N4136	7-197
VKF46.65	Butterfly valve, flange, PN6/10/16, DN65, kvs 215, tight shutoff	N4136	7-197
VKF46.80	Butterfly valve, flange, PN6/10/16, DN80, kvs 420, tight shutoff	N4136	7-195
VMP45.10-0.25	3-port seat valve with bypass, external thread, PN16, DN10, kvs 0.25	N4845	7-140
VMP45.10-0.4	3-port seat valve with bypass, external thread, PN16, DN10, kvs 0.4	N4845	7-140
VMP45.10-0.63	3-port seat valve with bypass, external thread, PN16, DN10, kvs 0.63	N4845	7-140
VMP45.10-0.63S	3-port seat valve with bypass, external thread for Conex®, PN16, DN10, kvs 0.63	N4854	7-140
VMP45.10-1	3-port seat valve with bypass, external thread, PN16, DN10, kvs 1	N4845	7-140
VMP45.10-1.6	3-port seat valve with bypass, external thread, PN16, DN10, kvs 1.6	N4845	7-140
VMP45.10-1.6S	3-port seat valve with bypass, external thread for Conex®, PN16, DN10, kvs 1.6	N4854	7-140
VMP45.10-1S	3-port seat valve with bypass, external thread for Conex®, PN16, DN10, kvs 1	N4854	7-140
VMP45.15-2.5	3-port seat valve with bypass, external thread, PN16, DN15, kvs 2.5	N4845	7-140
VMP45.15-2.5S	3-port seat valve with bypass, external thread for Conex®, PN16, DN15, kvs 2.5	N4854	7-140
VMP45.20-4	3-port seat valve with bypass, external thread, PN16, DN20, kvs 4	N4845	7-140
VMP47.10-0.25	3-port seat valve with bypass, external thread, PN16, DN10, kvs 0.25	N4847	7-144
VMP47.10-0.4	3-port seat valve with bypass, external thread, PN16, DN10, kvs 0.4	N4847	7-144
VMP47.10-0.63	3-port seat valve with bypass, external thread, PN16, DN10, kvs 0.63	N4847	7-144
VMP47.10-0.63S	3-port seat valves with T-bypass, external thread, PN16, DN10, kvs 0.63	N4847	7-144
VMP47.10-1	3-port seat valve with bypass, external thread, PN16, DN10, kvs 1	N4847	7-144
VMP47.10-1.6	3-port seat valve with bypass, external thread, PN16, DN10, kvs 1.6	N4847	7-144
VMP47.10-1.6S	3-port seat valves with T-bypass, external thread, PN16, DN10, kvs 1.6	N4847	7-144
VMP47.10-1S	3-port seat valves with T-bypass, external thread, PN16, DN10, kvs 1	N4847	7-144
VMP47.15-2.5	3-port seat valve with bypass, external thread, PN16, DN15, kvs 2.5	N4847	7-144
VMP47.15-2.5S	3-port seat valves with bypass, external thread, PN16, DN15, kvs 2.5	N4847	7-144
VPD110A-145	2-port seat radiator valve, DIN, pressure-compensated, dpw 5 kPa, PN10, DN10, 86...318 l/h	N2185	7-162
VPD110A-45	2-port seat radiator valve, DIN, pressure compensated, dpw 5 kPa, PN10, DN10, 25...104 l/h	N2185	7-162
VPD110A-90	2-port seat radiator valve, DIN, pressure compensated, dpw 5 kPa, PN10, DN10, 57...185 l/h	N2185	7-162
VPD110B-200	2-port seat radiator valve, DIN, pressure compensated, dpw 10 kPa, PN10, DN10, 95...483 l/h	N2185	7-162
VPD115A-145	2-port seat radiator valve, DIN, pressure compensated, dpw 5 kPa, PN10, DN15, 86...318 l/h	N2185	7-162
VPD115A-45	2-port seat radiator valve, DIN, pressure compensated, dpw 5 kPa, PN10, DN15, 25...104 l/h	N2185	7-162
VPD115A-90	2-port seat radiator valve, DIN, pressure compensated, dpw 5 kPa, PN10, DN15, 57...185 l/h	N2185	7-162
VPD115B-200	2-port seat radiator valve, DIN, pressure compensated, dpw 10 kPa, PN10, DN15, 95...483 l/h	N2185	7-162
VPE110A-145	Angle radiator valve, DIN, pressure-compensated, dpw 5 kPa, PN10, DN10, 86....318 l/h	N2185	7-162
VPE110A-45	Angle radiator valve, DIN, pressure-compensated, dpw 5 kPa, PN10, DN10, 25....104 l/h	N2185	7-162
VPE110A-90	Angle radiator valve, DIN, pressure-compensated, dpw 5 kPa, PN10, DN10, 57....185 l/h	N2185	7-162
VPE110B-200	Angle radiator valve, DIN, pressure-compensated, dpw 10 kPa, PN10, DN10, 95....483 l/h	N2185	7-162
VPE115A-145	Angle radiator valve, DIN, pressure-compensated, dpw 5 kPa, PN10, DN15, 86....318 l/h	N2185	7-162
VPE115A-45	Angle radiator valve, DIN, pressure-compensated, dpw 5 kPa, PN10, DN15, 25....104 l/h	N2185	7-162
VPE115A-90	Angle radiator valve, DIN, pressure-compensated, dpw 5 kPa, PN10, DN15, 57....185 l/h	N2185	7-162
VPE115B-200	Angle radiator valve, DIN, pressure-compensated, dpw 10 kPa, PN10, DN15, 95....483 l/h	N2185	7-162
VPI45.15F0.5	Combi valves, PN25, DN15, 90...620 l/h	N4853	7-168
VPI45.15F0.5Q	Combi valves, PN25, DN15, 90...620 l/h, pressure test points	N4853	7-168
VPI45.15F1.5	Combi valves, PN25, DN15, 290...1730 l/h	N4853	7-168
VPI45.15F1.5Q	Combi valves, PN25, DN15, 290...1730 l/h, pressure test points	N4853	7-168
VPI45.20F0.9	Combi valves, PN25, DN20, 160...1050 l/h	N4853	7-168
VPI45.20F0.9Q	Combi valves, PN25, DN20, 160...1050 l/h, pressure test points	N4853	7-168
VPI45.20F2	Combi valves, PN25, DN20, 350...2040 l/h	N4853	7-168

NEW PRODUCT

Type Overview

Product Number	Description	Datasheet	Page
VPI45.20F2Q	Combi valves, PN25, DN20, 350...2040 l/h, pressure test points	N4853	7-168
VPI45.25F1.5	Combi valves, PN25, DN25, 280...1720 l/h	N4853	7-168
VPI45.25F1.5Q	Combi valves, PN25, DN25, 280...1720 l/h, pressure test points	N4853	7-168
VPI45.25F2	Combi valves, PN25, DN25, 350...2040 l/h	N4853	7-168
VPI45.25F2Q	Combi valves, PN25, DN25, 350...2040 l/h, pressure test points	N4853	7-168
VPI45.32F3	Combi valves, PN25, DN32, 560...3050 l/h	N4853	7-168
VPI45.32F3Q	Combi valves, PN25, DN32, 560...3050 l/h, pressure test points	N4853	7-168
VPI45.40F7	Combi valves, PN25, DN40, 2355...7105 l/h	N4853	7-168
VPI45.40F7Q	Combi valves, PN25, DN40, 2355...7105 l/h, pressure test points	N4853	7-168
VPI45.50F8.5	Combi valves, PN25, DN50, 2664...8586 l/h	N4853	7-168
VPI45.50F8.5Q	Combi valves, PN25, DN50, 2664...8586 l/h, pressure test points	N4853	7-168
VPI46.15L0.2	Combi valve, internally threaded, PN25, DN15, 80...240 l/h	N4855	7-166
VPI46.15L0.2Q	Combi valve, internally threaded, PN25, DN15, 80...240 l/h, pressure test points	N4855	7-166
VPI46.15L0.6	Combi valve, internally threaded, PN25, DN15, 80...650 l/h	N4855	7-166
VPI46.15L0.6Q	Combi valve, internally threaded, PN25, DN15, 80...650 l/h, pressure test points	N4855	7-166
VPI46.20F1.4	Combi valve, internally threaded, PN25, DN20, 125...1450 l/h	N4855	7-166
VPI46.20F1.4Q	Combi valve, internally threaded, PN25, DN20, 125...1450 l/h, pressure test points	N4855	7-166
VPP46.10L0.2	Combi valve, externally threaded, PN25, DN10, 80...240 l/h	N4855	7-165
VPP46.10L0.2Q	Combi valve, externally threaded, PN25, DN10, 80...240 l/h, pressure test points	N4855	7-165
VPP46.15L0.2	Combi valve, externally threaded, PN25, DN15, 80...240 l/h	N4855	7-165
VPP46.15L0.2Q	Combi valve, externally threaded, PN25, DN15, 80...240 l/h, pressure test points	N4855	7-165
VPP46.15L0.6	Combi valve, externally threaded, PN25, DN15, 90...650 l/h	N4855	7-165
VPP46.15L0.6Q	Combi valve, externally threaded, PN25, DN15, 90...650 l/h, pressure test points	N4855	7-165
VPP46.20F1.4	Combi valve, externally threaded, PN25, DN20, 125...1450 l/h	N4855	7-165
VPP46.20F1.4Q	Combi valve, externally threaded, PN25, DN20, 125...1450 l/h, pressure test points	N4855	7-165
VUN210	Reverse angle radiator valve, NF, 2-pipe system, PN10, DN10, kvs 0.14...0.60	N2106	7-93
VUN215	Reverse angle radiator valve, NF, 2-pipe system, PN10, DN15, kvs 0.13...0.77	N2106	7-93
VVF21.100-160	2-port seat valve, flanged, PN6, DN100, kvs 160	N4310	7-59
VVF21.22	2-port seat valve, flanged, PN6, DN25, kvs 1.9	N4310	7-59
VVF21.23	2-port seat valve, flanged, PN6, DN25, kvs 3	N4310	7-59
VVF21.24	2-port seat valve, flanged, PN6, DN25, kvs 5	N4310	7-59
VVF21.25	2-port seat valve, flanged, PN6, DN25, kvs 7.5	N4310	7-59
VVF21.25-10	2-port seat valve, flanged, PN6, DN25, kvs 10	N4310	7-59
VVF21.25-2.5	2-port seat valve, flanged, PN6, DN25, kvs 2.5	N4310	7-59
VVF21.25-4	2-port seat valve, flanged, PN6, DN25, kvs 4	N4310	7-59
VVF21.25-6.3	2-port seat valve, flanged, PN6, DN25, kvs 6.3	N4310	7-59
VVF21.39	2-port seat valve, flanged, PN6, DN40, kvs 12	N4310	7-59
VVF21.40	2-port seat valve, flanged, PN6, DN40, kvs 19	N4310	7-59
VVF21.40-16	2-port seat valve, flanged, PN6, DN40, kvs 16	N4310	7-59
VVF21.40-25	2-port seat valve, flanged, PN6, DN40, kvs 25	N4310	7-59
VVF21.50	2-port seat valve, flanged, PN6, DN50, kvs 31	N4310	7-59
VVF21.50-40	2-port seat valve, flanged, PN6, DN50, kvs 40	N4310	7-59
VVF21.65	2-port seat valve, flanged, PN6, DN65, kvs 49	N4310	7-59
VVF21.65-63	2-port seat valve, flanged, PN6, DN65, kvs 63	N4310	7-59
VVF21.80	2-port seat valve, flanged, PN6, DN80, kvs 78	N4310	7-59
VVF21.80-100	2-port seat valve, flanged, PN6, DN80, kvs 100	N4310	7-59
VVF21.90	2-port seat valve, flanged, PN6, DN100, kvs 124	N4310	7-59
VVF31.100-160	2-port seat valve, flanged, PN10, DN100, kvs 160	N4320	7-61
VVF31.125-250	2-port seat valve, flanged, PN10, DN125, kvs 250	N4320	7-61
VVF31.15-2.5	2-port seat valve, flanged, PN10, DN15 kvs 2.5	N4320	7-61
VVF31.15-4	2-port seat valve, flanged, PN10, DN15, kvs 4	N4320	7-61
VVF31.150-315	2-port seat valve, flanged, PN10, DN150, kvs 315	N4320	7-61
VVF31.24	2-port seat valve, flanged, PN10, DN25, kvs 5	N4320	7-61
VVF31.25	2-port seat valve, flanged, PN10, DN25, kvs 7.5	N4320	7-61
VVF31.25-10	2-port seat valve, flanged, PN10, DN25, kvs 10	N4320	7-61
VVF31.25-6.3	2-port seat valve, flanged, PN10, DN25, kvs 6.3	N4320	7-61
VVF31.39	2-port seat valve, flanged, PN10, DN40, kvs 12	N4320	7-61

NEW PRODUCT

Type Overview

Product Number	Description	Datasheet	Page
VVF31.40	2-port seat valve, flanged, PN10, DN40, kvs 19	N4320	7-61
VVF31.40-16	2-port seat valve, flanged, PN10, DN40, kvs 16	N4320	7-61
VVF31.40-25	2-port seat valve, flanged, PN10, DN40, kvs 25	N4320	7-61
VVF31.50	2-port seat valve, flanged, PN10, DN50, kvs 31	N4320	7-61
VVF31.50-40	2-port seat valve, flanged, PN10, DN50, kvs 40	N4320	7-61
VVF31.65	2-port seat valve, flanged, PN10, DN65, kvs 49	N4320	7-61
VVF31.65-63	2-port seat valve, flanged, PN10, DN65, kvs 63	N4320	7-61
VVF31.80	2-port seat valve, flanged, PN10, DN80, kvs 78	N4320	7-61
VVF31.80-100	2-port seat valve, flanged, PN10, DN80, kvs 100	N4320	7-61
VVF31.90	2-port seat valve, flanged, PN10, DN100, kvs 124	N4320	7-61
VVF31.91	2-port seat valve, flanged, PN10, DN125, kvs 200	N4320	7-61
VVF31.92	2-port seat valve, flanged, PN10, DN150, kvs 300	N4320	7-61
VVF40.100-124	2-port seat valve, flanged, PN16, DN100, kvs 124	N4330	7-64
VVF40.100-160	2-port seat valve, flanged, PN16, DN100, kvs 160	N4330	7-64
VVF40.125-200	2-port seat valve, flanged, PN16, DN125, kvs 200	N4330	7-64
VVF40.125-250	2-port seat valve, flanged, PN16, DN125, kvs 250	N4330	7-64
VVF40.15-1.9	2-port seat valve, flanged, PN16, DN15, kvs 1.9	N4330	7-64
VVF40.15-2.5	2-port seat valve, flanged, PN16, DN15, kvs 2.5	N4330	7-64
VVF40.15-3	2-port seat valve, flanged, PN16, DN15, kvs 3	N4330	7-64
VVF40.15-4	2-port seat valve, flanged, PN16, DN15, kvs 4	N4330	7-64
VVF40.150-300	2-port seat valve, flanged, PN16, DN150, kvs 300	N4330	7-64
VVF40.150-315	2-port seat valve, flanged, PN16, DN150, kvs 315	N4330	7-64
VVF40.25-10	2-port seat valve, flanged, PN16, DN25, kvs 10	N4330	7-64
VVF40.25-5	2-port seat valve, flanged, PN16, DN25, kvs 5	N4330	7-64
VVF40.25-6.3	2-port seat valve, flanged, PN16, DN25, kvs 6.3	N4330	7-64
VVF40.25-7.5	2-port seat valve, flanged, PN16, DN25, kvs 7.5	N4330	7-64
VVF40.40-12	2-port seat valve, flanged, PN16, DN40, kvs 12	N4330	7-64
VVF40.40-16	2-port seat valve, flanged, PN16, DN40, kvs 16	N4330	7-64
VVF40.40-19	2-port seat valve, flanged, PN16, DN40, kvs 19	N4330	7-64
VVF40.40-25	2-port seat valve, flanged, PN16, DN40, kvs 25	N4330	7-64
VVF40.50-31	2-port seat valve, flanged, PN16, DN50, kvs 31	N4330	7-64
VVF40.50-40	2-port seat valve, flanged, PN16, DN50, kvs 40	N4330	7-64
VVF40.65-49	2-port seat valve, flanged, PN16, DN65, kvs 49	N4330	7-64
VVF40.65-63	2-port seat valve, flanged, PN16, DN65, kvs 63	N4330	7-64
VVF40.80-100	2-port seat valve, flanged, PN16, DN80, kvs 100	N4330	7-64
VVF40.80-78	2-port seat valve, flanged, PN16, DN80, kvs 78	N4330	7-64
VVF43.100-125	2-port seat valve, flanged, PN16, DN100, kvs 125	N4404	7-67
VVF43.100-160	2-port seat valve, flanged, PN16, DN100, kvs 160	N4404	7-67
VVF43.100-160K	2-port seat valve, flanged, PN16, DN100, kvs 160, pressure compensated	N4404	7-68
VVF43.125-200	2-port seat valve, flanged, PN16, DN125, kvs 200	N4404	7-67
VVF43.125-250	2-port seat valve, flanged, PN16, DN125, kvs 250	N4404	7-67
VVF43.125-250K	2-port seat valve, flanged, PN16, DN125, kvs 250, pressure compensated	N4404	7-68
VVF43.150-315	2-port seat valve, flanged, PN16, DN150, kvs 315	N4404	7-67
VVF43.150-360K	2-port seat valve, flanged, PN16, DN150, kvs 360, pressure compensated	N4404	7-68
VVF43.150-400	2-port seat valve, flanged, PN16, DN150, kvs 400	N4404	7-67
VVF43.65-50	2-port seat valve, flanged, PN16, DN65, kvs 50	N4404	7-67
VVF43.65-63	2-port seat valve, flanged, PN16, DN65, kvs 63	N4404	7-67
VVF43.65-63K	2-port seat valve, flanged, PN16, DN65, kvs 63, pressure compensated	N4404	7-68
VVF43.80-100	2-port seat valve, flanged, PN16, DN80, kvs 100	N4404	7-67
VVF43.80-100K	2-port seat valve, flanged, PN16, DN80, kvs 80, pressure compensated	N4404	7-68
VVF43.80-80	2-port seat valve, flanged, PN16, DN80, kvs 80	N4404	7-67
VVF47.100	2-port seat valve VVF47.100, DN100, kvs 160	N4419	7-70
VVF47.125	2-port seat valve VVF47.125, DN125, kvs 250	N4419	7-70
VVF47.150	2-port seat valve VVF47.150, DN150, kvs 315	N4419	7-70
VVF47.50	2-port seat valve VVF47.50, DN50, kvs 40	N4419	7-70
VVF47.65	2-port seat valve VVF47.65, DN65, kvs 63	N4419	7-70
VVF47.80	2-port seat valve VVF47.80, DN80, kvs 100	N4419	7-70

NEW PRODUCT

Type Overview

Product Number	Description	Datasheet	Page
VVF529.100K	2-port seat valves PN25 with flanged connections	Q4383	7-71
VVF529.125K	2-port seat valves PN25 with flanged connections	Q4383	7-71
VVF529.150K	2-port seat valves PN25 with flanged connections	Q4383	7-71
VVF529.50K	2-port seat valves PN25 with flanged connections	Q4383	7-71
VVF529.65K	2-port seat valves PN25 with flanged connections	Q4383	7-71
VVF529.80K	2-port seat valves PN25 with flanged connections	Q4383	7-71
VVF53.100-160	2-port seat valve, flanged, PN25, DN100, kvs 160	N4405	7-74
VVF53.100-160K	2-port seat valve, flanged, PN25, DN100, kvs 160, pressure compensated	N4405	7-74
VVF53.125-250	2-port seat valve, flanged, PN25, DN125, kvs 250	N4405	7-74
VVF53.125-250K	2-port seat valve, flanged, PN25, DN125, kvs 250, pressure compensated	N4405	7-74
VVF53.15-0.16	2-port seat valve, flanged, PN25, DN15, kvs 0.16	N4405	7-73
VVF53.15-0.2	2-port seat valve, flanged, PN25, DN15, kvs 0.2	N4405	7-73
VVF53.15-0.25	2-port seat valve, flanged, PN25, DN15, kvs 0.25	N4405	7-73
VVF53.15-0.32	2-port seat valve, flanged, PN25, DN15, kvs 0.32	N4405	7-73
VVF53.15-0.4	2-port seat valve, flanged, PN25, DN15, kvs 0.4	N4405	7-73
VVF53.15-0.5	2-port seat valve, flanged, PN25, DN15, kvs 0.5	N4405	7-73
VVF53.15-0.63	2-port seat valve, flanged, PN25, DN15, kvs 0.63	N4405	7-73
VVF53.15-0.8	2-port seat valve, flanged, PN25, DN15, kvs 0.8	N4405	7-73
VVF53.15-1	2-port seat valve, flanged, PN25, DN15, kvs 1	N4405	7-73
VVF53.15-1.25	2-port seat valve, flanged, PN25, DN15, kvs 1.25	N4405	7-73
VVF53.15-1.6	2-port seat valve, flanged, PN25, DN15, kvs 1.6	N4405	7-73
VVF53.15-2	2-port seat valve, flanged, PN25, DN15, kvs 2	N4405	7-73
VVF53.15-2.5	2-port seat valve, flanged, PN25, DN15, kvs 2.5	N4405	7-73
VVF53.15-3.2	2-port seat valve, flanged, PN25, DN15, kvs 3.2	N4405	7-73
VVF53.15-4	2-port seat valve, flanged, PN25, DN15, kvs 4	N4405	7-73
VVF53.150-360K	2-port seat valve, flanged, PN25, DN150, kvs 360, pressure compensated	N4405	7-74
VVF53.150-400	2-port seat valve, flanged, PN25, DN150, kvs 360	N4405	7-74
VVF53.20-6.3	2-port seat valve, flanged, PN25, DN20, kvs 6.3	N4405	7-73
VVF53.25-10	2-port seat valve, flanged, PN25, DN25, kvs 10	N4405	7-73
VVF53.25-5	2-port seat valve, flanged, PN25, DN25, kvs 5	N4405	7-73
VVF53.25-6.3	2-port seat valve, flanged, PN25, DN25, kvs 6.3	N4405	7-73
VVF53.25-8	2-port seat valve, flanged, PN25, DN25, kvs 8	N4405	7-73
VVF53.32-16	2-port seat valve, flanged, PN25, DN32, kvs 16	N4405	7-74
VVF53.40-12.5	2-port seat valve, flanged, PN25, DN40, kvs 12.5	N4405	7-74
VVF53.40-16	2-port seat valve, flanged, PN25, DN40, kvs 16	N4405	7-74
VVF53.40-20	2-port seat valve, flanged, PN25, DN40, kvs 20	N4405	7-74
VVF53.40-25	2-port seat valve, flanged, PN25, DN40, kvs 25	N4405	7-74
VVF53.50-31.5	2-port seat valve, flanged, PN25, DN50, kvs 31.5	N4405	7-74
VVF53.50-40	2-port seat valve, flanged, PN25, DN50, kvs 40	N4405	7-74
VVF53.50-40K	2-port seat valve, flanged, PN25, DN50, kvs 40, pressure compensated	N4405	7-74
VVF53.65-63	2-port seat valve, flanged, PN25, DN65, kvs 63	N4405	7-73
VVF53.65-63K	2-port seat valve, flanged, PN25, DN65, kvs 63, pressure compensated	N4405	7-74
VVF53.80-100	2-port seat valve, flanged, PN25, DN80, kvs 100	N4405	7-74
VVF53.80-100K	2-port seat valve, flanged, PN25, DN80, kvs 100, pressure compensated	N4405	7-74
VVF61.09	2-port seat valve, flanged, PN40, DN15, kvs 0.19	N4382	7-77
VVF61.10	2-port seat valve, flanged, PN40, DN15, kvs 0.3	N4382	7-77
VVF61.11	2-port seat valve, flanged, PN40, DN15, kvs 0.45	N4382	7-77
VVF61.12	2-port seat valve, flanged, PN40, DN15, kvs 0.7	N4382	7-77
VVF61.13	2-port seat valve, flanged, PN40, DN15, kvs 1.2	N4382	7-77
VVF61.14	2-port seat valve, flanged, PN40, DN15, kvs 1.9	N4382	7-77
VVF61.15	2-port seat valve, flanged, PN40, DN15, kvs 3	N4382	7-77
VVF61.23	2-port seat valve, flanged, PN40, DN25, kvs 3	N4382	7-77
VVF61.24	2-port seat valve, flanged, PN40, DN25, kvs 5	N4382	7-77
VVF61.25	2-port seat valve, flanged, PN40, DN25, kvs 7.5	N4382	7-77
VVF61.39	2-port seat valve, flanged, PN40, DN40, kvs 12	N4382	7-77
VVF61.40	2-port seat valve, flanged, PN40, DN40, kvs 19	N4382	7-77
VVF61.49	2-port seat valve, flanged, PN40, DN50, kvs 19	N4382	7-77

NEW PRODUCT

Type Overview

Product Number	Description	Datasheet	Page
VVF61.50	2-port seat valve, flanged, PN40, DN50, kvs 31	N4382	7-77
VVF61.65	2-port seat valve, flanged, PN40, DN65, kvs 49	N4382	7-77
VVF61.80	2-port seat valve, flanged, PN40, DN80, kvs 78	N4382	7-77
VVF61.90	2-port seat valve, flanged, PN40, DN100, kvs 124	N4382	7-77
VVF61.91	2-port seat valve, flanged, PN40, DN125, kvs 200	N4382	7-77
VVF61.92	2-port seat valve, flanged, PN40, DN150, kvs 300	N4382	7-77
VVG41.11	2-port seat valve, external thread, PN16, DN15, kvs 0.63	N4363	7-110
VVG41.12	2-port seat valve, external thread, PN16, DN15, kvs 1	N4363	7-110
VVG41.13	2-port seat valve, external thread, PN16, DN15, kvs 1.6	N4363	7-110
VVG41.14	2-port seat valve, external thread, PN16, DN15, kvs 2.5	N4363	7-110
VVG41.15	2-port seat valve, external thread, PN16, DN15, kvs 4	N4363	7-110
VVG41.20	2-port seat valve, external thread, PN16, DN20, kvs 6.3	N4363	7-110
VVG41.25	2-port seat valve, external thread, PN16, DN25, kvs 10	N4363	7-110
VVG41.32	2-port seat valve, external thread, PN16, DN32, kvs 16	N4363	7-110
VVG41.40	2-port seat valve, external thread, PN16, DN40, kvs 25	N4363	7-110
VVG41.50	2-port seat valve, external thread, PN16, DN50, kvs 40	N4363	7-110
VVG44.15-0.25	2-port seat valve, external thread, PN16, DN15, kvs 0.25	N4364	7-112
VVG44.15-0.4	2-port seat valve, external thread, PN16, DN15, kvs 0.4	N4364	7-112
VVG44.15-0.63	2-port seat valve, external thread, PN16, DN15, kvs 0.63	N4364	7-112
VVG44.15-1	2-port seat valve, external thread, PN16, DN15, kvs 1	N4364	7-112
VVG44.15-1.6	2-port seat valve, external thread, PN16, DN15, kvs 1.6	N4364	7-112
VVG44.15-2.5	2-port seat valve, external thread, PN16, DN15, kvs 2.5	N4364	7-112
VVG44.15-4	2-port seat valve, external thread, PN16, DN15, kvs 4	N4364	7-112
VVG44.20-6.3	2-port seat valve, external thread, PN16, DN20, kvs 6.3	N4364	7-112
VVG44.25-10	2-port seat valve, external thread, PN16, DN25, kvs 10	N4364	7-112
VVG44.32-16	2-port seat valve, external thread, PN16, DN32, kvs 16	N4364	7-112
VVG44.40-25	2-port seat valve, external thread, PN16, DN40, kvs 25	N4364	7-112
VVG55.15-0.25	2-port seat valve, external thread, PN25, DN15, kvs 0.25	N4379	7-114
VVG55.15-0.4	2-port seat valve, external thread, PN25, DN15, kvs 0.4	N4379	7-114
VVG55.15-0.63	2-port seat valve, external thread, PN25, DN15, kvs 0.63	N4379	7-114
VVG55.15-1	2-port seat valve, external thread, PN25, DN15, kvs 1	N4379	7-114
VVG55.15-1.6	2-port seat valve, external thread, PN25, DN15, kvs 1.6	N4379	7-114
VVG55.15-2.5	2-port seat valve, external thread, PN25, DN15, kvs 2.5	N4379	7-114
VVG55.20-4	2-port seat valve, external thread, PN25, DN20, kvs 4	N4379	7-114
VVG55.25-6.3	2-port seat valve, external thread, PN25, DN25, kvs 6.3	N4379	7-114
VVI46.15	2-port zone valve, internally threaded, PN16, DN15, kvs 2	N4842	7-105
VVI46.15/1	2-port zone valve, internally threaded, PN16, DN15, kvs 2	N4842	7-105
VVI46.20	2-port zone valve, internally threaded, PN16, DN20, kvs 3.5	N4842	7-105
VVI46.20/1	2-port zone valve, internally threaded, PN16, DN20, kvs 3.5	N4842	7-105
VVI46.25	2-port zone valve, internally threaded, PN16, DN25, kvs 5	N4842	7-105
VVI46.25/1	2-port zone valve, internally threaded, PN16, DN25, kvs 5	N4842	7-105
VVP45.10-0.25	2-port seat valve, external thread, PN16, DN10, kvs 0.25	N4845	7-100
VVP45.10-0.4	2-port seat valve, external thread, PN16, DN10, kvs 0.4	N4845	7-100
VVP45.10-0.63	2-port seat valve, external thread, PN16, DN10, kvs 0.63	N4845	7-100
VVP45.10-0.63S	2-port seat valve, external thread for Conex®, PN16, DN10, kvs 0.63	N4854	7-100
VVP45.10-1	2-port seat valve, external thread, PN16, DN10, kvs 1	N4845	7-100
VVP45.10-1.6	2-port seat valve, external thread, PN16, DN10, kvs 1.6	N4845	7-100
VVP45.10-1.6S	2-port seat valve, external thread for Conex®, PN16, DN10, kvs 1.6	N4854	7-100
VVP45.10-1S	2-port seat valve, external thread for Conex®, PN16, DN10, kvs 1	N4854	7-100
VVP45.15-2.5	2-port seat valve, external thread, PN16, DN15, kvs 2.5	N4845	7-100
VVP45.15-2.5N	2-port seat valve, external thread, PN16, DN15, kvs 2.5	N4840	7-102
VVP45.15-2.5S	2-port seat valve, external thread for Conex®, PN16, DN15, kvs 2.5	N4854	7-100
VVP45.20-4	2-port seat valve, external thread, PN16, DN20, kvs 4	N4845	7-100
VVP45.20-4N	2-port seat valve, external thread, PN16, DN20, kvs 4	N4840	7-102
VVP45.25-10	2-port seat valve, external thread, PN16, DN25, kvs 10	N4845	7-100
VVP45.25-6.3	2-port seat valve, external thread, PN16, DN25, kvs 6.3	N4845	7-100
VVP45.25-6.3N	2-port seat valve, external thread, PN16, DN25, kvs 6.3	N4840	7-102

NEW PRODUCT

Type Overview

Product Number	Description	Datasheet	Page
VVP45.32-16	2-port seat valve, external thread, PN16, DN32, kvs 16	N4845	7-100
VVP45.40-25	2-port seat valve, external thread, PN16, DN40, kvs 25	N4845	7-100
VVP47.10-0.25	2-port seat valve, external thread, PN16, DN10, kvs 0.25	N4847	7-103
VVP47.10-0.4	2-port seat valve, external thread, PN16, DN10 kvs 0.4	N4847	7-103
VVP47.10-0.63	2-port seat valve, external thread, PN16, DN10, kvs 0.63	N4847	7-103
VVP47.10-0.63S	2-port seat valves, external thread, PN16, DN10, kvs 0.63	N4847	7-103
VVP47.10-1	2-port seat valve, external thread, PN16, DN10, kvs 1	N4847	7-103
VVP47.10-1.6	2-port seat valve, external thread, PN16, DN10, kvs 1.6	N4847	7-103
VVP47.10-1.6S	2-port seat valves, external thread, PN16, DN10, kvs 1.6	N4847	7-103
VVP47.10-1S	2-port seat valves, external thread, PN16, DN10, kvs 1	N4847	7-103
VVP47.15-2.5	2-port seat valve, external thread, PN16, DN15, kvs 2.5	N4847	7-103
VVP47.15-2.5S	2-port seat valves, external thread, PN16, DN15, kvs 2.5	N4847	7-103
VVP47.20-4	2-port seat valve, external thread, PN16, DN20, kvs 4	N4847	7-103
VXF21.100-160	3-port seat valve, flanged, PN6, DN100, kvs 160	N4410	7-118
VXF21.22	3-port seat valve, flanged, PN6, DN25, kvs 1.9	N4410	7-118
VXF21.23	3-port seat valve, flanged, PN6, DN25, kvs 3	N4410	7-118
VXF21.24	3-port seat valve, flanged, PN6, DN25, kvs 5	N4410	7-118
VXF21.25	3-port seat valve, flanged, PN6, DN25, kvs 7.5	N4410	7-118
VXF21.25-10	3-port seat valve, flanged, PN6, DN25, kvs 10	N4410	7-118
VXF21.25-2.5	3-port seat valve, flanged, PN6, DN25, kvs 2.5	N4410	7-118
VXF21.25-4	3-port seat valve, flanged, PN6, DN25, kvs 4	N4410	7-118
VXF21.25-6.3	3-port seat valve, flanged, PN6, DN25, kvs 6.3	N4410	7-118
VXF21.39	3-port seat valve, flanged, PN6, DN40, kvs 12	N4410	7-118
VXF21.40	3-port seat valve, flanged, PN6, DN40, kvs 19	N4410	7-118
VXF21.40-16	3-port seat valve, flanged, PN6, DN40, kvs 16	N4410	7-118
VXF21.40-25	3-port seat valve, flanged, PN6, DN40, kvs 25	N4410	7-118
VXF21.50	3-port seat valve, flanged, PN6, DN50, kvs 31	N4410	7-118
VXF21.50-40	3-port seat valve, flanged, PN6, DN50, kvs 40	N4410	7-118
VXF21.65	3-port seat valve, flanged, PN6, DN65, kvs 49	N4410	7-118
VXF21.65-63	3-port seat valve, flanged, PN6, DN65, kvs 63	N4410	7-118
VXF21.80	3-port seat valve, flanged, PN6, DN80, kvs 78	N4410	7-118
VXF21.80-100	3-port seat valve, flanged, PN6, DN80, kvs 100	N4410	7-118
VXF21.90	3-port seat valve, flanged, PN6, DN100, kvs 124	N4410	7-118
VXF31.100-160	3-port seat valve, flanged, PN10, DN100, kvs 160	N4420	7-120
VXF31.125-250	3-port seat valve, flanged, PN10, DN125, kvs 250	N4420	7-120
VXF31.15-2.5	3-port seat valve, flanged, PN10, DN15, kvs 2.5	N4420	7-120
VXF31.15-4	3-port seat valve, flanged, PN10, DN15, kvs 4	N4420	7-120
VXF31.150-315	3-port seat valve, flanged, PN10, DN150, kvs 315	N4420	7-120
VXF31.24	3-port seat valve, flanged, PN10, DN25, kvs 5	N4420	7-120
VXF31.25	3-port seat valve, flanged, PN10, DN25, kvs 7.5	N4420	7-120
VXF31.25-10	3-port seat valve, flanged, PN10, DN25, kvs 10	N4420	7-120
VXF31.25-6.3	3-port seat valve, flanged, PN10, DN25, kvs 6.3	N4420	7-120
VXF31.39	3-port seat valve, flanged, PN10, DN40, kvs 12	N4420	7-120
VXF31.40	3-port seat valve, flanged, PN10, DN40, kvs 19	N4420	7-120
VXF31.40-16	3-port seat valve, flanged, PN10, DN40, kvs 16	N4420	7-120
VXF31.40-25	3-port seat valve, flanged, PN10, DN40, kvs 25	N4420	7-120
VXF31.50	3-port seat valve, flanged, PN10, DN50, kvs 31	N4420	7-120
VXF31.50-40	3-port seat valve, flanged, PN10, DN50, kvs 40	N4420	7-120
VXF31.65	3-port seat valve, flanged, PN10, DN65, kvs 49	N4420	7-120
VXF31.65-63	3-port seat valve, flanged, PN10, DN65, kvs 63	N4420	7-120
VXF31.80	3-port seat valve, flanged, PN10, DN80, kvs 78	N4420	7-120
VXF31.80-100	3-port seat valve, flanged, PN10, DN80, kvs 100	N4420	7-120
VXF31.90	3-port seat valve, flanged, PN10, DN100, kvs 124	N4420	7-120
VXF31.91	3-port seat valve, flanged, PN10, DN125, kvs 200	N4420	7-120
VXF31.92	3-port seat valve, flanged, PN10, DN150, kvs 300	N4420	7-120
VXF40.100-124	3-port seat valve, flanged, PN16, DN100, kvs 124	N4430	7-123
VXF40.100-160	3-port seat valve, flanged, PN16, DN100, kvs 160	N4430	7-124

NEW PRODUCT

Type Overview

Product Number	Description	Datasheet	Page
VXF40.125-200	3-port seat valve, flanged, PN16, DN125, kvs 200	N4430	7-124
VXF40.125-250	3-port seat valve, flanged, PN16, DN125, kvs 250	N4430	7-124
VXF40.15-1.9	3-port seat valve, flanged, PN16, DN15, kvs 1.9	N4430	7-123
VXF40.15-2.5	3-port seat valve, flanged, PN16, DN15, kvs 2.5	N4430	7-123
VXF40.15-3	3-port seat valve, flanged, PN16, DN15, kvs 3	N4430	7-123
VXF40.15-4	3-port seat valve, flanged, PN16, DN15, kvs 4	N4430	7-123
VXF40.150-300	3-port seat valve, flanged, PN16, DN150, kvs 300	N4430	7-124
VXF40.150-315	3-port seat valve, flanged, PN16, DN150, kvs 315	N4430	7-124
VXF40.25-10	3-port seat valve, flanged, PN16, DN25, kvs 10	N4430	7-123
VXF40.25-5	3-port seat valve, flanged, PN16, DN25, kvs 5	N4430	7-123
VXF40.25-6.3	3-port seat valve, flanged, PN16, DN25, kvs 6.3	N4430	7-123
VXF40.25-7.5	3-port seat valve, flanged, PN16, DN25, kvs 7.5	N4430	7-123
VXF40.40-12	3-port seat valve, flanged, PN16, DN40, kvs 12	N4430	7-123
VXF40.40-16	3-port seat valve, flanged, PN16, DN40, kvs 16	N4430	7-123
VXF40.40-19	3-port seat valve, flanged, PN16, DN40, kvs 19	N4430	7-123
VXF40.40-25	3-port seat valve, flanged, PN16, DN40, kvs 25	N4430	7-123
VXF40.50-31	3-port seat valve, flanged, PN16, DN50, kvs 31	N4430	7-123
VXF40.50-40	3-port seat valve, flanged, PN16, DN50, kvs 40	N4430	7-123
VXF40.65-49	3-port seat valve, flanged, PN16, DN65, kvs 49	N4430	7-123
VXF40.65-63	3-port seat valve, flanged, PN16, DN65, kvs 63	N4430	7-123
VXF40.80-100	3-port seat valve, flanged, PN16, DN80, kvs 100	N4430	7-123
VXF40.80-78	3-port seat valve, flanged, PN16, DN80, kvs 78	N4430	7-123
VXF43.100-160	3-port seat valve, flanged, PN16, DN100, kvs 160	N4404	7-126
VXF43.125-250	3-port seat valve, flanged, PN16, DN125, kvs 250	N4404	7-126
VXF43.150-400	3-port seat valve, flanged, PN16, DN150, kvs 400	N4404	7-126
VXF43.65-63	3-port seat valve, flanged, PN16, DN65, kvs 63	N4404	7-126
VXF43.80-100	3-port seat valve, flanged, PN16, DN80, kvs 100	N4404	7-126
VXF47.100	3-port seat valve VXF47.100, DN100, kvs 160	N4419	7-128
VXF47.125	3-port seat valve VXF47.125, DN125, kvs 250	N4419	7-128
VXF47.150	3-port seat valve VXF47.150, DN150, kvs 315	N4419	7-128
VXF47.50	3-port seat valve VXF47.50, DN50, kvs 40	N4419	7-128
VXF47.65	3-port seat valve VXF47.65, DN65, kvs 63	N4419	7-128
VXF47.80	3-port seat valve VXF47.80, DN80, kvs 100	N4419	7-128
VXF53.100-160	3-port seat valve, flanged, PN25, DN100, kvs 160	N4405	7-129
VXF53.125-250	3-port seat valve, flanged, PN25, DN125, kvs 250	N4405	7-129
VXF53.15-1.6	3-port seat valve, flanged, PN25, DN15, kvs 1.6	N4405	7-129
VXF53.15-2.5	3-port seat valve, flanged, PN25, DN15, kvs 2.5	N4405	7-129
VXF53.15-4	3-port seat valve, flanged, PN25, DN15, kvs 4	N4405	7-129
VXF53.150-400	3-port seat valve, flanged, PN25, DN150, kvs 360	N4405	7-129
VXF53.20-6.3	3-port seat valve, flanged, PN25, DN25, kvs 6.3	N4405	7-129
VXF53.25-10	3-port seat valve, flanged, PN25, DN25, kvs 10	N4405	7-129
VXF53.25-6.3	3-port seat valve, flanged, PN25, DN25, kvs 6.3	N4405	7-129
VXF53.32-16	3-port seat valve, flanged, PN25, DN32, kvs 16	N4405	7-129
VXF53.40-16	3-port seat valve, flanged, PN25, DN40, kvs 16	N4405	7-129
VXF53.40-25	3-port seat valve, flanged, PN25, DN40, kvs 25	N4405	7-129
VXF53.50-40	3-port seat valve, flanged, PN25, DN50, kvs 40	N4405	7-129
VXF53.65-63	3-port seat valve, flanged, PN25, DN65, kvs 63	N4405	7-129
VXF53.80-100	3-port seat valve, flanged, PN25, DN80, kvs 100	N4405	7-129
VXF61.14	3-port seat valve, flanged, PN40, DN15, kvs 1.9	N4482	7-132
VXF61.15	3-port seat valve, flanged, PN40, DN15, kvs 3	N4482	7-132
VXF61.24	3-port seat valve, flanged, PN40, DN25, kvs 5	N4482	7-132
VXF61.25	3-port seat valve, flanged, PN40, DN25, kvs 7.5	N4482	7-132
VXF61.39	3-port seat valve, flanged, PN40, DN40, kvs 12	N4482	7-132
VXF61.40	3-port seat valve, flanged, PN40, DN40, kvs 19	N4482	7-132
VXF61.49	3-port seat valve, flanged, PN40, DN40, kvs 19	N4482	7-132
VXF61.50	3-port seat valve, flanged, PN40, DN50, kvs 31	N4482	7-132
VXF61.65	3-port seat valve, flanged, PN40, DN65, kvs 49	N4482	7-132

NEW PRODUCT

Type Overview

Product Number	Description	Datasheet	Page
VXF61.80	3-port seat valve, flanged, PN40, DN80, kvs 78	N4482	7-132
VXF61.90	3-port seat valve, flanged, PN40, DN100, kvs 124	N4482	7-132
VXF61.91	3-port seat valve, flanged, PN40, DN125, kvs 200	N4482	7-132
VXF61.92	3-port seat valve, flanged, PN40, DN150, kvs 300	N4482	7-132
VXG41.1301	3-port seat valve, external thread, PN16, DN15, kvs 1.6, tight bypass	N4463	7-107
VXG41.1401	3-port seat valve, external thread, PN16, DN15, kvs 2.5, tight bypass	N4463	7-151
VXG41.15	3-port seat valve, external thread, PN16, DN15, kvs 4	N4463	7-151
VXG41.1501	3-port seat valve, external thread, PN16, DN15, kvs 4, tight bypass	N4463	7-151
VXG41.20	3-port seat valve, external thread, PN16, DN20, kvs 6.3	N4463	7-151
VXG41.2001	3-port seat valve, external thread, PN16, DN20, kvs 6.3, tight bypass	N4463	7-151
VXG41.25	3-port seat valve, external thread, PN16, DN25, kvs 10	N4463	7-151
VXG41.2501	3-port seat valve, external thread, PN16, DN25, kvs 10, tight bypass	N4463	7-151
VXG41.32	3-port seat valve, external thread, PN16, DN32, kvs 16	N4463	7-151
VXG41.3201	3-port seat valve, external thread, PN16, DN32, kvs 16, tight bypass	N4463	7-151
VXG41.40	3-port seat valve, external thread, PN16, DN40, kvs 25	N4463	7-151
VXG41.4001	3-port seat valve, external thread, PN16, DN40, kvs 25, tight bypass	N4463	7-151
VXG41.50	3-port seat valve, external thread, PN16, DN50, kvs 40	N4463	7-151
VXG41.5001	3-port seat valve, external thread, PN16, DN50, kvs 40, tight bypass	N4463	7-151
VXG44.15-0.25	3-port seat valve, external thread, PN16, DN15, kvs 0.25	N4464	7-153
VXG44.15-0.4	3-port seat valve, external thread, PN16, DN15, kvs 0.4	N4464	7-153
VXG44.15-0.63	3-port seat valve, external thread, PN16, DN15, kvs 0.63	N4464	7-153
VXG44.15-1	3-port seat valve, external thread, PN16, DN15, kvs 1	N4464	7-153
VXG44.15-1.6	3-port seat valve, external thread, PN16, DN15, kvs 1.6	N4464	7-153
VXG44.15-2.5	3-port seat valve, external thread, PN16, DN15, kvs 2.5	N4464	7-153
VXG44.15-4	3-port seat valve, external thread, PN16, DN15, kvs 4	N4464	7-153
VXG44.20-6.3	3-port seat valve, external thread, PN16, DN20, kvs 6.3	N4464	7-153
VXG44.25-10	3-port seat valve, external thread, PN16, DN25, kvs 10	N4464	7-153
VXG44.32-16	3-port seat valve, external thread, PN16, DN32, kvs 16	N4464	7-153
VXG44.40-25	3-port seat valve, external thread, PN16, DN40, kvs 25	N4464	7-153
VXI46.15	3-port zone valve, internally threaded, PN16, DN15, kvs 2, kvs bypass 1.4	N4842	7-148
VXI46.15/1	3-port zone valve, internally threaded, PN16, DN15, kvs 2, kvs bypass 1.4	N4842	7-148
VXI46.20	3-port zone valve, internally threaded, PN16, DN20, kvs 3.5, kvs bypass 2.45	N4842	7-148
VXI46.20/1	3-port zone valve, internally threaded, PN16, DN20, kvs 3.5, kvs bypass 2.45	N4842	7-148
VXI46.25	3-port zone valve, internally threaded, PN16, DN25, kvs 5, kvs bypass 3	N4842	7-148
VXI46.25/1	3-port zone valve, internally threaded, PN16, DN25, kvs 5, kvs bypass 3	N4842	7-148
VXI46.25T	3-port zone valve, internally threaded, PN16, DN25, kvs 5, kvs bypass 5	N4842	7-148
VXP45.10-0.25	3-port seat valve, external thread, PN16, DN10, kvs 0.25	N4845	7-138
VXP45.10-0.4	3-port seat valve, external thread, PN16, DN10, kvs 0.4	N4845	7-100
VXP45.10-0.63	3-port seat valve, external thread, PN16, DN10, kvs 0.63	N4845	7-100
VXP45.10-1	3-port seat valve, external thread, PN16, DN10, kvs 1	N4845	7-100
VXP45.10-1.6	3-port seat valve, external thread, PN16, DN10, kvs 1.6	N4845	7-100
VXP45.15-2.5	3-port seat valve, external thread, PN16, DN15, kvs 2.5	N4845	7-100
VXP45.20-4	3-port seat valve, external thread, PN16, DN20, kvs 4	N4845	7-100
VXP45.25-10	3-port seat valve, external thread, PN16, DN25, kvs 10	N4845	7-138
VXP45.25-6.3	3-port seat valve, external thread, PN16, DN25, kvs 6.3	N4845	7-138
VXP45.32-16	3-port seat valve, external thread, PN16, DN32, kvs 16	N4845	7-138
VXP45.40-25	3-port seat valve, external thread, PN16, DN40, kvs 25	N4845	7-138
VXP47.10-0.25	3-port seat valve, external thread, PN16, DN10, kvs 0.25	N4847	7-142
VXP47.10-0.4	3-port seat valve, external thread, PN16, DN10, kvs 0.4	N4847	7-142
VXP47.10-0.63	3-port seat valve, external thread, PN16, DN10, kvs 0.63	N4847	7-142
VXP47.10-1	3-port seat valve, external thread, PN16, DN10, kvs 1	N4847	7-142
VXP47.10-1.6	3-port seat valve, external thread, PN16, DN10, kvs 1.6	N4847	7-142
VXP47.15-2.5	3-port seat valve, external thread, PN16, DN15, kvs 2.5	N4847	7-142
VXP47.20-4	3-port seat valve, external thread, PN16, DN20, kvs 4	N4847	7-142
walk-by	walk-by radio system 868 MHz		10-29
WFK30.D080	Mechanical water meter single-jet with module slot, 1.5 m³/h, 80 mm, G ¾ ", cold	N5326	10-13
WFK30.D110	Mechanical water meter single-jet with module slot, 1.5 m³/h, 110 mm, G ¾ ", cold	N5326	10-13

NEW PRODUCT

Type Overview

Product Number	Description	Datasheet	Page
WFM21.B111	Siemeca™ meter, nominal flow 0.6 m³ /h	N5333	10-15
WFM21.D111	Siemeca™ meter, nominal flow 0.6 m³ /h	N5333	10-15
WFM21.E131	Siemeca™ meter, nominal flow 0.6 m³ /h	N5333	10-15
WFM26.B111	Siemeca™ electronic heat meter, wall mounted	N5333	10-16
WFM26.D111	Siemeca™ electronic heat meter, wall mounted	N5333	10-16
WFM26.E131	Siemeca™ electronic heat meter, wall mounted	N5333	10-16
WFM407.B113	Siemeca™ electronic heat meter wall mounting	N5331	10-14
WFM407.D113	Siemeca™ electronic heat meter wall mounting	N5331	10-14
WFM407.E133	Siemeca™ electronic heat meter wall mounting	N5331	10-14
WFN21.B111	Siemeca™ electronic heat and cooling energy meter, wall mounted	N5338	10-17
WFN21.D111	Siemeca™ electronic heat and cooling energy meter, wall mounted	N5338	10-17
WFN21.E131	Siemeca™ electronic heat and cooling energy meter, wall mounted	N5338	10-17
WFN26.B111	Siemeca™ electronic heat and cooling energy meter, wall mounted	N5338	10-17
WFN26.D111	Siemeca™ electronic heat and cooling energy meter, wall mounted	N5338	10-17
WFN26.E131	Siemeca™ electronic heat and cooling energy meter, wall mounted	N5338	10-17
WFW30.D080	Mechanical water meter single-jet with module slot, 1.5 m³/h, 80 mm, G ¾ ", hot	N5326	10-13
WFW30.D110	Mechanical water meter single-jet with module slot, 1.5 m³/h, 110 mm, G ¾ ", hot	N5326	10-13
WFZ.E110-I	Mounting kit for 110 mm mounting length	N5333	10-18
WFZ.E110-IT	Mounting kit for 110 mm mounting length	N5333	10-18
WFZ.E110G3-I	Mounting kit for 110 mm mounting length	N5333	10-18
WFZ.E110G3-IT	Mounting kit for 110 mm mounting length	N5333	10-18
WFZ.E130-I	Mounting kit for 130 mm mounting length	N5333	10-18
WFZ.E130-IT	Mounting kit for 130 mm mounting length	N5333	10-18
WFZ.E130G1-I	Mounting kit for 130 mm mounting length	N5333	10-18
WFZ.E130G1-IT	Mounting kit for 130 mm mounting length	N5333	10-18
WFZ.IRDA-USB	Infrared read head with USB interface	N2886	10-12
WFZ.K15	Ball valve, internal thread ½" with sensor accomodation		10-18
WFZ.K16	Ball valve		10-18
WFZ.K17	Ball valve		10-18
WFZ.K18	Ball valve, internal thread ¾" with sensor accomodation		10-18
WFZ.K22	Ball valve, internal thread 1" with sensor accomodation		10-18
WFZ.MBM	PC connecting cable		10-34
WFZ.MBUSSET	M-bus connection kit		10-19
WFZ.PS	Programming stick		10-13
WFZ.R110	Spacer 110 mm		10-13
WFZ.R110-1	Spacer 110 mm, externally threaded 1"		10-18
WFZ.R130	Spacer 1" x 130 mm		10-18
WFZ.R2	Pair of fittings for ½" AG, union nut ¾"		10-13
WFZ.R2-1	Pair of fittings for ¾" AG, union nut 1"		10-18
WFZ.R80	Spacer 80 mm		10-13
WFZ.T16	T-piece for flow sensor, IG ½" and adapter		10-18
WFZ.T19	T-piece for flow sensor, IG ¾" and adapter		10-18
WFZ.T22	T-piece for flow sensor, IG 1" and adapter		10-18
WFZ.USB-1	Special Port Converter RS232 to USB	N2886	10-13
WFZ.W	Mounting kit for washstand water meter		10-13
WFZ.Z	Mounting kit for tap water meter		10-13
WFZ16.MO	Radio adapter AMR Modularis		10-26
WFZ166.MO	Radio adapter walk-by Modularis		10-29
WHE501-D29	Electronic heat cost allocator with watchdog timer, Single-sensor, Summer switch-off: 06/01 – 09/30, due date 09/30	N2886	10-7
WHE502-D10	Electronic heat cost allocator with watchdog timer, Double sensor, Summer switch-off: 06/01 – 08/31, due date 12/31	N2886	10-7
WHE502-D29	Electronic heat cost allocator with watchdog timer, Double sensor, Summer switch-off: 06/01 – 09/30, due date 09/30	N2886	10-7
WHE551-0000	Electronic heat cost allocator with walk-by radio interface, Single-sensor, due date 12/31, type of readout annual	N2886	10-9
WHE551-D291	Electronic heat cost allocator with walk-by radio interface, watchdog timer, Single-sensor, Summer switch-off: 06/01 – 09/30, due date 09/30, type of readout monthly	N2886	10-9

NEW PRODUCT

Type Overview

Product Number	Description	Datasheet	Page
WHE552-0000	Electronic heat cost allocator with walk-by radio interface, Double sensor, due date 12/31, type of readout annual	N2886	10-9
WHE552-D100	Electronic heat cost allocator with walk-by radio interface, watchdog timer, Double sensor, Summer switch-off: 06/01 – 08/31, due date 12/31, type of readout annual	N2886	10-9
WHE552-D291	Electronic heat cost allocator with walk-by radio interface, watchdog timer, Double sensor, Summer switch-off: 06/01 – 09/30, due date 09/30, type of readout monthly	N2886	10-9
WHE561-000	Electronic heat cost allocator with AMR radio interface, Single-sensor, due date 12/31	N2886	10-10
WHE561-D29	Electronic heat cost allocator with AMR radio interface, watchdog timer, Single-sensor, Summer switch-off: 06/01 – 09/30, due date 09/30	N2886	10-10
WHE562-000	Electronic heat cost allocator with AMR radio interface, Double sensor, due date 12/31	N2886	10-10
WHE562-D10	Electronic heat cost allocator with AMR radio interface, watchdog timer, Double sensor, Summer switch-off: 06/01 – 08/31, due date 12/31	N2886	10-10
WHE562-D29	Electronic heat cost allocator with AMR radio interface, watchdog timer, Double sensor, Summer switch-off: 06/01 – 09/30, due date 09/30	N2886	10-10
WHE571-D29	Electronic heat cost allocator with infrared interface, Single-sensor, Summer switch-off: 06/01 – 09/30, due date 09/30	N2886	10-8
WHE572-D29	Electronic heat cost allocator with infrared interface, Double sensor, Summer switch-off: 06/01 – 09/30, due date 09/30	N2886	10-8
WHZ3.USB	USB tool set		10-33
WRI80	Control and heat meter interface	N2827	10-37
WRI982	Consumption data interface	N2735	4-15
WTT16	Battery-powered network node	N2874	10-27
WTT16.232	Battery-powered network node	N2874	10-27
WTX16.MOD-1	Network node and power supply	N2878	10-27
WTZ.BAT	Battery for WTT16..	N2870	10-28
WTZ.K232	RS-232 cable	N2870	10-28
WTZ.RM	PC radio module	N2876	10-28
WTZ.WBSET-2/PC	readout-set walk-by		10-29
WZC-P250	M-Bus signal converter for max 250 devices	N5365	10-32
WZC-P60	M-Bus signal converter for max 60 devices	N5382	10-32
WZC-R250	M-Bus repeater	N5366	10-32
WZC-S250	M-Bus signal converter	N5364	10-33
WZM-E1	Mounting kit, pair of fittings G1" × R¾" with seals		10-23
WZM-E2	Mounting kit, pair of fittings G2" × R1½" with seals		10-23
WZM-E34	Mounting kit, pair of fittings G¾" × R½" with seals		10-23
WZM-E54	Mounting kit, pair of fittings G1¼" × R1" with seals		10-23
WZM-F190	Spacer for heat meter DN20 – 190 mm, incl. flat seals		10-23
WZM-F260	Spacer for heat meter DN25 – 260 mm, incl. flat seals		10-23
WZM-F270	Spacer for heat meter DN50 – 270 mm, incl. flat seals		10-23
WZM-F300.65	Spacer for heat meter DN65 – 300 mm, incl. flat seals		10-23
WZM-F300.80	Spacer for heat meter DN80 – 300 mm, incl. flat seals		10-23
WZM-F360.100	Spacer for heat meter DN100 – 360 mm, incl. flat seals		10-23
WZM-G110	Spacer for heat meter G¾" – 110 mm, incl. flat seals		10-23
WZM-G190	Spacer for heat meter G1" – 190 mm, incl. flat seals		10-23
WZM-G260	Spacer for heat meter G1¼" – 260 mm, incl. flat seals		10-23
WZM-G300	Spacer for heat meter G2" – 300 mm, incl. flat seals		10-23
WZM-V110	Extension 80 mm / thread ¾" B on 110 mm / G 1" B, incl. Seals		10-13
WZM-V130	Extension from 110 mm G¾" to 130 mm G¾", pair with seals		10-13
WZM-V130.1	Extension from 110 mm G¾" to 130 mm G1", pair with seals		10-23
WZM-V190	Spacer for heat meter G1" – 190 mm, incl. flat seals		10-23
WZR-OP-USB	Optical reading head for PC with USB- access		10-23
WZT-A12	Adapter for temperature sensor DS M10 × 1 × G½"B with seal		10-24
WZT-A34	Adapter for temperature sensor DS M10 × 1 × G¾"B with seal		10-24
WZT-G10	Threaded welding sleeve M10 × 1 for DS temperature sensor		10-24
WZT-G12	Welding sleeve G ½" × 45° to the pipe's axis		10-24
WZT-GLG	Threaded welding sleeve G ½" × 90° to the pipe's axis		10-24
WZT-K1	Ball valve Rp1" for sensors DS M10 × 1, 28 mm long		10-24
WZT-K12	Ball valve Rp½" for sensors DS M10 × 1, 28 mm long		10-24

NEW PRODUCT

Type Overview

Product Number	Description	Datasheet	Page
WZT-K34	Ball valve Rp¾" for sensors DS M10 × 1, 28 mm long		10-24
WZT-M35	Protection pocket G½"B, brass, 5.2 × 35 mm		10-24
WZT-M50	Protection pocket G½"B, brass, 5.2 × 50 mm		10-24
WZT-S100	Protection pocket G½"B, immersion length 100 mm, stainless steel, with seal		10-24
WZT-S150	Protection pocket G½"B, immersion length 150 mm, stainless steel, with seal		10-24
WZT-S43V	Pocket G½"B, stainless steel, 5.2 × 37 mm, with seal		10-24
WZU-AC110-15	Mains module AC 110 V, cable 1.5 m		10-25
WZU-AC230-15			10-25
WZU-ACDC24-00			10-25
WZU-AM	Analog module		10-24
WZU-BDS	Battery		10-25
WZU-CL	CL module		10-24
WZU-MB-GR	M-Bus module		10-24
WZU-P2			10-24
WZU-RM	Radio module with integrated antenna		10-24
WZU-RM-EXT	Radio module with external antenna		10-24
WZU1-1020	Pair of temperature sensors Pt100, length 100 mm × Ø 6 mm, cable length 2 m		10-24
WZU1-1520	Pair of temperature sensors Pt100, length 150 mm × Ø 6 mm, cable length 2 m		10-24
WZU5-1020	Pair of temperature sensors Pt500, length 100 mm × Ø 6 mm, cable length 2 m		10-24
WZU5-1050	Pair of temperature sensors Pt500, length 100 mm × Ø 6 mm, cable length 5 m		10-24
WZU5-2815	Pair of temperature sensors Pt500, length 27.5 mm, DS M10 × 1, cable length 1.5 m		10-24
WZU5-2825	Pair of temperature sensors Pt500, length 27.5 mm, DS M10 × 1, cable length 2.5 m		10-24
Z155/100	Blanking flange, DN100		7-137
Z155/15F	Blanking flange, DN15		7-135
Z155/20F	Blanking flange, DN20		7-135
Z155/25F	Blanking flange, DN25		7-135
Z155/32F	Blanking flange, DN32		7-135
Z155/40	Blanking flange, DN40		7-135
Z155/50	Blanking flange, DN50		7-135
Z155/65	Blanking flange, DN65		7-135
Z155/80	Blanking flange, DN80		7-137
ZM101/A	Terminal housing for valves with magnetic actuator, AC 24 V, DC 0...10 V / 0...20 V Phs	N4591	7-201
ZM111	Terminal housing for valves with magnetic actuator, 0...20 V Phs	N4591	7-201
ZM121/A	Terminal housing for valves with magnetic actuator, AC 24 V, DC 4...20 mA / 0...20 V Phs	N4591	7-201
ZM250	Replacement electronic for M3P..FY..	N4454	7-136

NEW PRODUCT

Standard controllers

Overview and selection tools	Overview of product details	1-2
Autonomous heating controllers	Immersion temperature controller Synco 100	1-5
	Controllers for solar plants RWD..	1-9
	Heating controller RVP2..	1-11
	Heating controller RVP3..	1-15
Communicative heating controllers	Heating controller RVP3..	1-17
	Heating controller RVL4..	1-21
	Room units QAW..	1-26
	Heating controllers RMH..	1-29
	Boiler sequence controllers RMK..	1-31
	Extension modules and operator units Synco 700	1-37
Autonomous district heating controllers	District heating controllers RDV1..	1-42
Communicative district heating controllers	District heating controllers RVD2..	1-46
Autonomous HVAC controllers	Duct temperature controllers RLM..	1-50
	Universal controller RLU..	1-53
	Universal controllers RWD..	1-58
	Heat Pump Controller RWD..	1-60
Communicative HVAC controllers	Universal controllers RMU..	1-61
	Switching and monitoring device RMS..	1-72
	Extension modules and operator units for RMU.. and RMS..	1-74
Various electrical accessories	Interfaces SEA.. / SEM.. / SEZ..	1-80
	Setpoint adjuster BSG..	1-82
	System integration QAX160 / SEM50MB / PPM..	1-83
	Display/ Time switches/ Transformers BAU / SEH.. / SEM..	1-84
	KNX - System components	1-86
	KNX/Ethernet	1-86
	KNX/USB	1-87
	KNX - Line Couplers	1-88
	KNX - Power Supply Units	1-89

Overview of heating controllers product details

	RLE..			RWD..	RVP..		RVP..					RVL..				RMH..	RMK..
Preferential applications	132	162	127	32S	201	211	340	350	351	360	361	479	480	481	482	760	770
Heating group	■	■			■	■	■	■	■	■	■		■	■	■	■	■
Boiler control 1-stage					■	■											
2-stage								■	■	■	■		■	■	■	■	■
Multi-boiler system																	■
Domestic hot water	■	■	■	■		■		■	■	■	■			■	■	■	
Domestic water solar			■	■				■	■	■	■			■	■		
2nd heating group										■	■	■				■	
3rd heating group																■	

	RLE..			RWD..	RVP..		RVP..					RVL..				RMH..	RMK..
Operation system	132	162	127	32S	201	211	340	350	351	360	361	479	480	481	482	760	770
Type of operation analog	■	■	■		■	■											
digital				■			■	■	■	■	■	■	■	■	■	■	■
Heating curve bar												■	■	■	■		
Time switch analog					■	■											
digital					[1]	[1]	■	■	■	■	■	■	■	■	■	■	■
Programmed plant types	6	3	7	7			2	3	3	6	6	1	6	29	21	41	18
Yearly clock							■	■	■	■	■	■	■	■	■	■	■

[1] Variant

	RLE..			RWD..	RVP..		RVP..					RVL..				RMH..	RMK..
Communication	132	162	127	32S	201	211	340	350	351	360	361	479	480	481	482	760	770
Controller network							LBP	LBP		LBP		LBP	LBP	LBP	LBP	KNX	KNX
Web operation							OZW672..			OZW 672..		OZW672..				OZW77..	
Fax, SMS and pager function							OCI611..			OCI 611..		OCI611..				OZW771	

	RLE..			RWD..	RVP..		RVP..					RVL..				RMH..	RMK..
Sensors	132	162	127	32S	201	211	340	350	351	360	361	479	480	481	482	760	770
Outside sensor QAC22	■	■			■	■	■	■	■	■	■	■	■	■	■	■	■
Outside sensor QAC32					■	■	■	■	■	■	■	■	■	■	■	■	
Strap-on temp. sensor QAD22			■	■	■	■	■	■	■	■	■	■	■	■	■	■	■
Immersion temp. sensor QAE2..			■	■	■	■	■	■	■	■	■	■	■	■	■	■	■
Cable temp. sensor QAP2..			■	■	■	■	■	■	■	■	■	■	■	■	■	■	■
Room temp. sensor QAA24							■	■	■	■	■	■	■	■	■	■	■
Room temp. sensor QAA10					■	■											
Room temp. senso [1]							■	■	■	■	■	■	■	■	■	■	■
Solar sensor QLS60															■	■	

[1] AQR2531..NW

	RLE..			RWD..	RVP..		RVP..					RVL..				RMH..	RMK..
Room units	132	162	127	32S	201	211	340	350	351	360	361	479	480	481	482	760	770
Room unit analog QAW50					■	■	■	■	■	■	■	■	■	■	■		
Room unit analog QAW50.03										■	■						
Room unit digital QAW70					■	■	■	■	■	■	■	■	■	■	■		
Room unit digital QAW740																■	■

Overview of district heating controllers product details

Preferential applications	RVD120	RVD140	RVD250	RVD260	RVP340	RVL480	RVL481	RMH760
Heating group	■	■	■	■	■	■	■	■
District heat exchanger	■	■	■	■	[1]	[1]	[1]	■
Domestic hot water	■	■	■	■			■	■
Domestic water solar		■	■	■			■	
2nd heating group				■				■
3rd heating group								■

[1] Variant: For the description of the controllers see chapter 1 „Communicative heating controllers".

Operation system		RVD120	RVD140	RVD250	RVD260	RVP340	RVL480	RVL481	RMH760
Type of operation	analog								
	digital	■	■	■	■	■	■	■	■
Heating curve bar							■	■	
Time switch	analog								
	digital	■	■	■	■	■	■	■	■
Programmed plant types		3	8	28	14	2	6	29	41
Yearly clock		■	■	■	■	■	■	■	■

Communication	RVD120	RVD140	RVD250	RVD260	RVP340	RVL480	RVL481	RMH760
Controller network			LPB	LPB	LPB	LPB	LPB	KNX
M-bus slave			■	■				
Remote readout via PC	ext. Modbus-Interface	ext. Modbus-Interface	OZW1.. / OZW672..		OZW672..	OZW672..		OZW77..
Fax, SMS and pager function			OCI611..		OCI611..	OCI611..		OZW771

Sensors		RVD120	RVD140	RVD250	RVD260	RVP340	RVL480	RVL481	RMH760
Outside sensor	QAC22	■	■	■	■	■	■	■	■
Outside sensor	QAC32	■	■	■	■	■	■	■	■
Strap-on temp. sensor	QAD22	■	■	■	■	■	■	■	■
Immersion temp. sensor	QAE2..	■	■	■	■	■	■	■	■
Cable temp. sensor	QAP2..	■	■	■	■	■	■	■	■
Room temp. sensor	QAA24					■	■	■	■
Room temp. sensor	QAA10	■	■	■	■				
Room temp. sensor	[1]					■	■	■	■
Solar sensor	QLS60								■
Pressure sensor	QBE2002..		■	■	■				

[1] AQR2531..NW

Room units		RVD120	RVD140	RVD250	RVD260	RVP340	RVL480	RVL481	RMH760
Room unit analog	QAW50	■	■	■	■	■	■	■	
Room unit analog	QAW50.03				■				
Room unit digital	QAW70	■	■	■	■	■	■	■	
Room unit digital	QAW740								■

Overview of HVAC controllers product details

	RLM..	RLA..	RWD..				RLU..					RMU..			RMS..		RMZ..	
	162	162	32	82	62	68	202	220	222	232	236	710	720	730	705	785	787	788
	Air duct temperature controller	Room temperature controller	Universal controller, 1 control loop, 2DO	Universal controller, 1 control loop, 2DO	Universal controller, 1 control loop, 2AO	Universal controller, 1 control loop, 1AO, 1DO	Universal controller, 1 control loop, 2DO	Universal controller, 1 control loop, 2AO	Universal controller, 2 control loops, 2AO, 2DO	Universal controller, 2 control loops, 3AO, 2DO	Universal controller, 2 control loops, 3AO, 6DO	Modular universal controller, 1 control loop	Modular universal controller, 2 control loops	Modular universal controller, 3 control loops	Switching and Monitoring Device	Universal module, 8UI	Universal module, 4UI, 4DO	Universal module, 4UI, 2DO, 2AO
Option modules for RMU7.., RMS705												4[2]	4[2]	4[2]	4[2]	1[2]	2[2]	2[2]
Operation	■	■	■	■	■	■	■	■	■	■	■	■[1]	■[1]	■[1]	■[1]			
KNX communication												■	■	■	■			
7-day time switch and holiday/ special day program												■	■	■	■			
Supervision												■	■	■	■			
Logic functions												■	■	■	■			
Outputs																		
Step switch							■		■	■	■	■	■	■	■			
Relay	1	1[4]	2	2		1	2		2	2	6	2	4	6	6		4	2
3-position			1[3]	1[3]			1[3]		1[3]									
DC 0...10 V	2	2			2	1		2	2	3	3	2	3	4	4			2
Universal inputs																		
T1							■	■	■	■	■	■	■	■	■	■	■	■
Pt1000			■	■	■	■	■	■	■	■	■	■	■	■	■	■	■	■
DC 0...10 V			■	■	■	■	■	■	■	■	■	■	■	■	■	■	■	■
Digital							■	■	■	■	■	■	■	■	■	■	■	■
LG-Ni 1000			■	■	■	■	■	■	■	■	■	■	■	■	■	■	■	■
Number of universal inputs	-	-	2	2	2	2	4	4	4	5	5	6	8	8	8	8	4	4
Fixed inputs																		
DC 0...10 V	1	1																
Digital	2	1	1	1	1	1	1	1	1	2	2							
LG-Ni 1000	1	1																
Integrated LG-Ni 1000 sensor	1	1																
Controlled variable																		
Universal			■	■	■	■	■	■	■	■	■	■	■	■	■			
Temperature °C	■	■	■	■	■	■	■	■	■	■	■	■	■	■	■			
Control mode																		
PID							■	■	■	■	■	■	■	■	■			
P/PI	■	■	■	■	■	■	■	■	■	■	■	■	■	■	■			
Control loops																		
Cascade			■	■	■	■	■	■	■	■	■	■	■	■				
Number	1	1	1	1	1	1	1	1	2	2	2	1	2	3	3			

■ [1] Optional operation:
RMZ790: Plug-in operator unit
RMZ791: Detached operator unit
RMZ792: Bus operator unit

[2] Maximum number of option modules RMZ78x per controller

[3] 2 Relays or one 3-position

[4] RLA162.1 variant

AO Analog output
DO Digital output
UI Universal inputs

Differential temperature controllers

RLE127..

Compact electronic controllers with immersion type temperature sensor and setting unit combined in one device. It is designed for installation directly onto the plant. Only the wires for mains connection and controller out-put need to be laid. Supplied with protection pocket for indirect temperature sensing.

Application:
Differential temperature controller, with 2-position control signal and auxiliary relay. The RLE127 is ideally suited for control of the following heating plants:
- Solar energy plants with storage tanks
- Swimming pool heating systems with solar panels
- Heat storage plants with several storage tanks
- Multiboiler plants

Features:
- Pre-configured application types selected by DIP switch
- Changeover to a secondary heat source upon demand
- Minimum charging temperature option
- Absolute temperature setpoint
- Maximum temperature limitation
- Remote setpoint adjustment
- Test mode as commissioning aid
- Frost protection

Data sheet	N3337
Operating voltage	AC 230 V
Frequency	50/60 Hz
Power consumption	4 VA
Analog input, signal	LG-Ni1000 0...1000 Ohm
Relay outputs	Changeover contact, potential-free
Relay output, switching voltage	AC 24...230 V
Relay output, switching current	2 A
Setpoint setting range	0...30 K
Immersion length	150 mm
PN class	PN 10
Degree of protection	IP65
Dimensions (W x H x D)	125 × 152 × 78 mm

Range overview RLE127..

Product Title	Data sheet	Stock No.	Product No.
Differential temperature controller, AC 230 V, 2-position output	N3337	BPZ:RLE127	**RLE127**
Differential temperature controller, AC 230 V, 2-position output, with additional temperature sensor	N3337	BPZ:RLE127.QAZ	**RLE127.QAZ**

Field devices for RLE127..

Product Title	Data sheet	Stock No.	Product No.
Setpoint adjuster, passive, scale 0...50 °C (exchangeable)	N1991	BPZ:BSG21.1	**BSG21.1**
Complete range of scales for BSG..	N1991	BPZ:BSG-Z	**BSG-Z**
Strap-on temperature sensor LG-Ni1000	N1801	BPZ:QAD22	**QAD22**
Immersion temperature sensor, passive	N1781	BPZ:QAE21..	**QAE21..**
Cable temperature sensor for high-temperature applications (180°C)	N1833	BPZ:QAP21.2	**QAP21.2**

RLE132

Immersion temperature controller, AC 230 V, 3-position output

Compact electronic controller with immersion type temperature sensor and setting unit combined in one device. It is designed for installation directly onto the plant. Only the wires for mains connection and controller output need to be laid. Supplied with protection pocket for indirect temperature sensing.

Application:
Modulating temperature controller, with 3-position control signal and auxiliary relay. The RLE132 is ideally suited for control of the following heating plants:
- Domestic hot water temperature
- Flow temperature control
- Calorifiers or heat exchangers

Features:
- Values for both normal and reduced temperature can be set
- Setpoint changeover via external contact or time switch
- Optional legionella function
- Auxiliary digital output for heat demand
- Connection for remote setting unit
- Minimum limitation of boiler return temperature
- Minimum or maximum limitation of the return temperature
- PI control (selectable)
- Service mode

Data sheet	N3334
Operating voltage	AC 230 V
Frequency	50/60 Hz
Power consumption	4 VA
Analog input, signal	LG-Ni1000 0...1000 Ohm
Digital input, contact query	DC 3...6 mA DC 6...15 V
Relay outputs	N.O. contact, potential-free
Relay output, switching voltage	AC 24...250 V
Relay output, switching current	2 A
Setpoint setting range	0...130 °C
Setpoint readjustment range	0...50 K
Immersion length	150 mm
PN class	PN 10
Degree of protection	IP65
Dimensions (W x H x D)	125 × 152 × 78 mm

Stock No.	Product No.
BPZ:RLE132	**RLE132**

Field devices for RLE132

Product Title	Data sheet	Stock No.	Product No.
Setpoint adjuster, passive, scale 0...50 °C (exchangeable)	N1991	BPZ:BSG21.1	**BSG21.1**
Complete range of scales for BSG..	N1991	BPZ:BSG-Z	**BSG-Z**
Outside sensor LG-Ni1000	N1811	BPZ:QAC22	**QAC22**

Immersion temperature controller, AC 24 V, DC 0...10 V output RLE162

Compact electronic controller with immersion type temperature sensor and setting unit combined in one device. It is designed for installation directly onto the plant. Only the wires for power supply connection and controller output need to be laid. Supplied with threaded nipple for direct temperature sensing.

Applications:
Modulating temperature controller, with 1 or 2 continuous DC 0...10 V output signals and auxiliary relay. The RLE162 is used for control and limiting of temperature in hot water, heating or cooling plants:
- Domestic hot water temperature
- Heating flow temperature
- Closed circuit heat exchangers
- Water-side control of HVAC units
- Chilled water temperature

Features:
- High or low temperature limitation
- Auxiliary digital output
- Compensation via outside sensor
- Connection for remote setting unit
- P or PI control (selectable)
- Service modes
- Heating and cooling modes available
- Setpoint changeover via external contact or time switch
- Optional legionella function

Data sheet	N3333
Operating voltage	AC 24 V
Frequency	50/60 Hz
Power consumption	2 VA
Analog output, signal	DC 0...10 V
Analog output, current	Max. 1 mA
Analog outputs, number	2
Analog input, signal	LG-Ni1000 0...1000 Ohm DC 0...10 V
Digital input, contact query	DC 3...6 mA DC 6...15 V
Relay outputs	N.O. contact, potential-free
Relay output, switching voltage	AC 24...230 V
Relay output, switching current	2 A
Setpoint setting range	-10...130 °C
Setpoint readjustment range	0...60 K
Immersion length	130 mm
PN class	PN 10
Degree of protection	IP65
Dimensions (W x H x D)	125 × 152 × 78 mm

	Stock No.	Product No.
	BPZ:RLE162	**RLE162**

Field devices for RLE162

Product Title	Data sheet	Stock No.	Product No.
Setpoint adjuster, passive, scale 0...50 °C (exchangeable)	N1991	BPZ:BSG21.1	**BSG21.1**
Complete range of scales for BSG..	N1991	BPZ:BSG-Z	**BSG-Z**
Outside sensor LG-Ni1000	N1811	BPZ:QAC22	**QAC22**
Protection pocket 150 mm, MS63 nickel-plated, G½", PN10, LW7	N1194	BPZ:ALT-SB150	**ALT-SB150**

Application examples Synco™ 100

These are only a few examples of many applications that can be done with the with Synco™100 controllers: RLA.. / RLE.. / RLM..
More Synco™100 applications are described in "HIT" (the HVAC project engineering tool with a library of over 300 pre-configured HVAC-applications) and in the RLA.. / RLE.. / RLM.. data sheet.

RLE132

H0C003 LE1 HQ

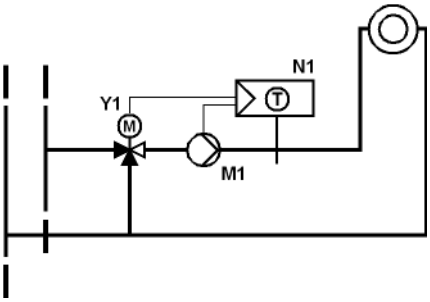

Heating Plant, Flow Temperature Control

- Controller (N1) with immersion built-in sensor to control the heating flow temperature via modulating control of the mixing valve (Y1)

RLE162

H00B01 LE1 HQ

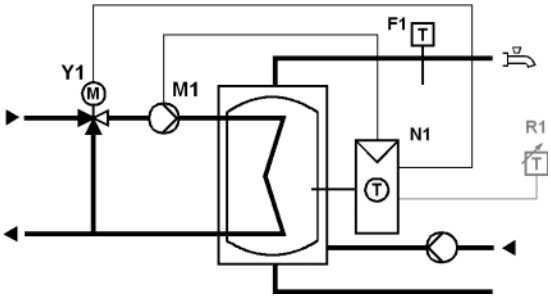

Domestic Hot Water Plant

- Controller (N1) with built-in immersion sensor to control the d.h.w. storage temperature via modulating control of the primary d.h.w. heating valve (Y1) and the circulating pump (M1).

RLE127

SA0002 LE1 HQ

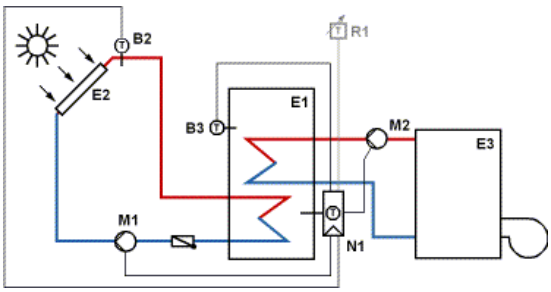

Domestic Hot Water Plant

- Controller (N1) acquires the temperature in the hot water storage tank (E1) via its built-in immersion detector, and the temperature of the solar collector (E2) measured by the temperature detector B2.
- The measured temperature differential is compared with the desired Dt set-point set on the controller. If the measured differential exceeds the set value, the controller switches ON the circulating pump (M1) to load the storage tank.

Differential temperature controller, AC 230 V, with 2 relay outputs

RWD32S

Differential temperature controller, for use in solar heating applications, where water-side control takes place depending on a selected temperature differential.

Application
Differential temperature controller, with 2-position control signals. The RWD32S is ideally suited for control of the following heating plants:
- Solar energy plants with storage tanks
- Swimming pool heating systems with solar panels
- Heat storage plants with several storage tanks

Features
- Pre-configured applications
- Saving energy counter
- Changeover to a secondary heat source upon demand
- Minimum charging temperature option
- Absolute temperature setpoint
- Maximum temperature limitation
- Frost protection
- Relay output with delay time ajustable

Data sheet	N3344
Operating voltage	AC 230 V
Frequency	50/60 Hz
Power consumption	6.5 VA
Digital input, contact query	DC 15 mA DC 15 V
Relay outputs	Changeover contacts, potential-free
Relay output, switching voltage	AC 24...230 V DC 5...30 V
Relay output, switching current	AC 0.02...4 (3) A DC 0.1...4 A
Degree of protection	IP20
Dimensions (W x H x D)	130 × 114 × 57 mm

	Stock No.	Product No.
	BPZ:RWD32S	**RWD32S**

Field devices for RWD32S

Product Title	Data sheet	Stock No.	Product No.
Strap-on temperature sensor LG-Ni1000	N1801	BPZ:QAD22	**QAD22**
Immersion temperature sensor, passive	N1781	BPZ:QAE21..	**QAE21..**
Cable temperature sensor (6 x 40.5 mm) for HVAC applications	N1831	BPZ:QAP2..	**QAP..**

Application examples RWD..

These are only a few examples of many applications that can be done with the with controllers RWD..
More applications are described in "HIT" (the HVAC project engineering tool with a library of over 300 pre-configured HVAC-applications) and in the RWD.. data sheet.

RWD32S

SA0003 WD3 HQ

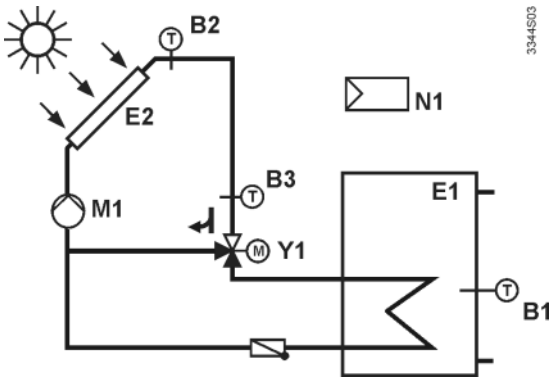

Solar System with Diverting Valve (Bypass)

- Differential temperature control of a storage tank with an additional sensor (B3) in the flow from the collector and a bypass valve (Y1).
- This application is used where the collector is a long way from the storage tank (e.g. on a high roof) and prevents cool water in the pipe work from being fed into the tank (typically on morning start up or after long periods without solar energy).

RWD32S

SA0005 WD3 HQ

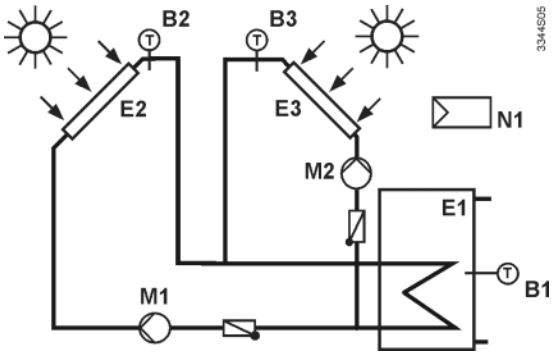

Hot water storage tank with solar heating, charging pump and non-return valve

- Basic differential temperature control of a hot water storage tank.
- This application allows differential temperature control of the storage tank by two different solar collectors (e.g. East and West facing) maximizing the solar energy throughout the day.

RWD32S

SA0007 WD3 HQ

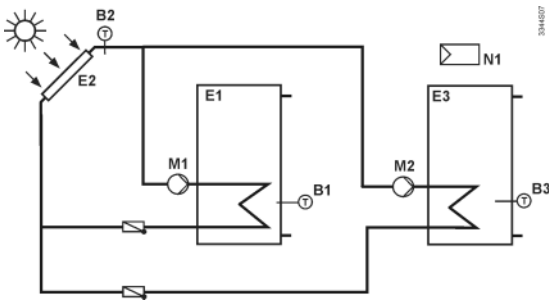

Two independent hot water storage tanks and solar heating

- Basic differential temperature control of a hot water storage tank (each with charging pump and non-return valve).
- This application uses a single solar collector to charge two storage tanks. It is typically used where the sun's energy is very high or can be used for long periods

Heating controller with analog operating elements

RVP201..

Heating controllers for use in residential or smaller commercial buildings that have their own heat generation. Easy-to-understand analog operating elements for the enduser.

Key functions
Weather-compensated flow or boiler temperature control, with or without room influence or room temperature control. Control of 3- or 2-position actuators or direct control of a burner.

Additional settings
- Control of the heating pump
- Quick setback and boost heating
- Heating curve
- Room temperature influence
- Frost protection for the plant and the room
- Automatic ECO function for switching the heating system on and off depending on demand
- Maximum limitation of the flow or boiler temperature
- Pump overrun and pump kick
- Remote switching of operating mode via room unit or external switch

Operating modes
The following operating modes can be selected with the slider: Automatic/Protection, Automatic/Reduced, Setback, Normal operation and Protection.

Data sheet	N2464
Operating voltage	AC 230 V
Frequency	50 Hz
Power consumption	7 VA
Analog input, signal	LG-Ni1000 NTC 575
Relay output, switching voltage	AC 24...230 V
Relay output, switching current	2 A
Dimensions (W x H x D)	144 × 96 × 115 mm

Range overview RVP201..

Product Title	Data sheet	Stock No.	Product No.
Heating controller without time switch	N2464	BPZ:RVP201.0	**RVP201.0**
Heating controller with analog 24-hour time switch	N2464	BPZ:RVP201.1	**RVP201.1**

RVP211..

Heating controller incl. DHW heating

Heating controller for use in residential or smaller commercial buildings that have their own heat generation and own DHW heating. Easy-to-understand analog operating elements for the enduser.

Key functions (same as RVP201)

Other settings (same as RVP201)

DHW heating functions
- Storage tank charging by control of a charging pump:
- Absolute priority: Heating circuit pump remains locked during DHW charging
- No priority (parallel): Heating circuit pump and DHW charging pump operate parallel
- Storage tank charging by control of a diverting valve
- Frost protection for DHW
- DHW temperature can be acquired via a temperature sensor or thermostat

Operating modes
The following operating modes can be selected with the slider: Automatic/Protection, Automatic/Reduced, Setback, Normal operation, Protection, or DHW heating only.

Data sheet	N2464
Operating voltage	AC 230 V
Frequency	50 Hz
Power consumption	7 VA
Analog input, signal	LG-Ni1000 NTC 575
Relay output, switching voltage	AC 24...230 V
Relay output, switching current	2 A
Dimensions (W x H x D)	144 × 96 × 115 mm

Range overview RVP211..

Product Title	Stock No.	Product No.
Heating controller without time switch, with d.h.w. heating	BPZ:RVP211.0	**RVP211.0**
Heating controller with analog 24-hour time switch, with d.h.w. heating	BPZ:RVP211.1	**RVP211.1**

Accessories for RVP2..

Product Title	Data sheet	Stock No.	Product No.
Analog 24-hour time switch	N2464	BPZ:AUZ3.1	**AUZ3.1**
Analog 7-day time switch	N2464	BPZ:AUZ3.7	**AUZ3.7**
Digital time switch	N2464	BPZ:AUD3	**AUD3**

Field devices for RVP2..

Product Title	Data sheet	Stock No.	Product No.
Outside sensor LG-Ni1000	N1811	BPZ:QAC22	**QAC22**
Outside sensor NTC 575 Ohm	N1811	BPZ:QAC32	**QAC32**
Strap-on temperature sensor LG-Ni1000	N1801	BPZ:QAD22	**QAD22**
Immersion temperature sensor 100 mm LG-Ni1000, with protection pocket	N1781	BPZ:QAE2120.010	**QAE2120.010**
Cable temperature sensor silicone 1.5 m, LG-Ni1000	N1831	BPZ:QAP21.3	**QAP21.3**
Digital room unit	N1635	BPZ:QAW50	**QAW50**
Multifunctional room operator unit	N1637	BPZ:QAW70..	**QAW70..**
Remote room temperature sensor		BPZ:QAW44	**QAW44**
Room temperature sensor, NTC, 5...30 °C	N1725	BPZ:QAA10	**QAA10**

Application example RVP2..

These are only a few examples of many applications that can be done with the family of controllers: RVP2...
More applications are described in "HIT" (the HVAC project engineering tool with a library of over 300 pre-configured HVAC-applications) and in the RVP2.. data sheet.

RVP201.1

H0C001 VP2 HQ b

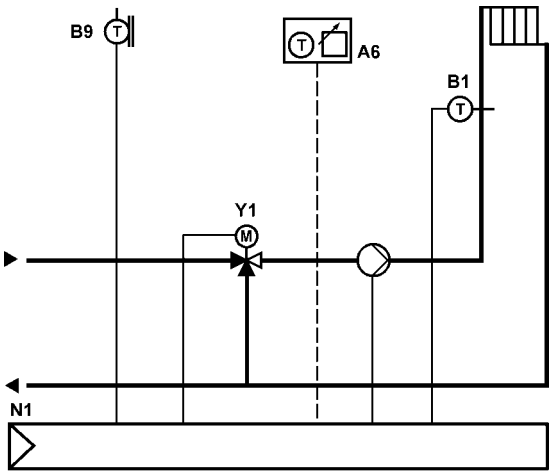

Weather-compensated heating system, one heating circuit

- Weather-compensated flow temperature control with 3-position actuator acting on mixing valve
- Frost protection for building and plant
- Time program with analog 24-hour time switch
- ECO function switches off heating depending on outside temperature
- Room temperature-dependent boost heating and quick setback (with room unit only)
- Maximum limitation of flow temperature

RVP211.1

HAAA01 VP2 HQ b

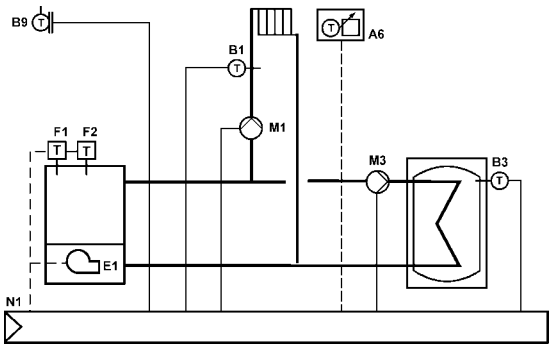

Weather-compensated heating system, heat generation, one heating circuit, d.h.w.

- Weather-compensated flow temperature control acting on boiler with single-stage burner
- Control of d.h.w. supply via pump-charged storage tank
- Frost protection for building and plant
- Time program with analog 24-hour time switch
- ECO function switches off heating depending on outside temperature

Heating controller for 1 heating circuit and d.h.w., without communication — RVP351

Weather-compensated flow temperature control of heating circuit with or without room influence, d.h.w. heating and demand based boiler temperature control (like RVP350).
RVP351 without LPB communication for standalone applications.

Data sheet	N2545
Operating voltage	AC 230 V
Frequency	50 Hz
Power consumption	7 VA
Analog input, signal	LG-Ni1000 NTC 575
Digital inputs	Status contact
Relay output, switching voltage	AC 24...230 V
Relay output, switching current	2 x 2(2) A 7 x 1(1) A
Dimensions (W x H x D)	144 × 96 × 109 mm

Stock No.	Product No.
S55370-C138	**RVP351**

Heating controller for 2 heating circuits and d.h.w., without communication — RVP361

Weather-compensated flow temperature control of 2 independent heating circuits with or without room influence, d.h.w. heating and demand based boiler temperature control (like RVP360).
RVP361 without LPB communication for standalone applications.

Data sheet	N2546
Operating voltage	AC 230 V
Frequency	50 Hz
Power consumption	8 VA
Analog input, signal	LG-Ni1000 NTC 575
Relay output, switching voltage	AC 24...230 V
Relay output, switching current	2 x 2(2) A 9 x 1(1) A
Dimensions (W x H x D)	144 × 96 × 109 mm

Stock No.	Product No.
S55370-C140	**RVP361**

Field devices for RVP3..

Product Title	Data sheet	Stock No.	Product No.
Outside sensor LG-Ni1000	N1811	BPZ:QAC22	**QAC22**
Outside sensor NTC 575 Ohm	N1811	BPZ:QAC32	**QAC32**
Strap-on temperature sensor LG-Ni1000	N1801	BPZ:QAD22	**QAD22**
Immersion temperature sensor 100 mm LG-Ni1000, with protection pocket	N1781	BPZ:QAE2120.010	**QAE2120.010**
Cable temperature sensor for high-temperature applications (180°C)	N1833	BPZ:QAP21.2	**QAP21.2**
Cable temperature sensor silicone 1.5 m, LG-Ni1000	N1831	BPZ:QAP21.3	**QAP21.3**
Digital room unit	N1635	BPZ:QAW50	**QAW50**
Digital room unit with address selector	N1635	BPZ:QAW50.03	**QAW50.03**
Multifunctional room operator unit	N1637	BPZ:QAW70..	**QAW70..**
Remote room temperature sensor		BPZ:QAW44	**QAW44**
Room temperature sensor LG-Ni1000	N1721	BPZ:QAA24	**QAA24**
Front module with passiv temperature measurement, LG-Ni1000	N1408	S55720-S133	**AQR2531ANW**

NEW PRODUCT

Heating controller for 1 heating circuit

RVP340

Weather-compensated flow temperature control of heating circuit with or without room influence.

Key functions:
- 2 preprogrammed plant types can be selected, with automatic assignment of the functions required for each plant type
- Weather-compensated flow temperature control through control of valve (mixing) in a heating circuit
- Weather-compensated flow temperature control through control of the 2-port valve in the primary return of a heating circuit with district heat connection (substation)

Additional functions
The RVP340 provides the following functions (no submodules or extra devices required):
- Optimum start / stop
- Quick setback and boost heating
- Automatic ECO function, depending on the outside temperature and the type of building construction
- One 7-day program with 3 heating periods per day
- Yearly time program for holidays
- Digital setting of the heating curve
- Pump kick and pump overrun
- Minimum and maximum limitation of the flow temperature
- Multifunctional outputs
- Digital input for remote control of operating mode
- Communication with other controllers via LPB data bus (RVP3.., RVL4.. and RVD2..)

Data sheet	N2545
Operating voltage	AC 230 V
Frequency	50 Hz
Power consumption	6 VA
Analog input, signal	LG-Ni1000 NTC 575
Digital inputs	Status contact
Relay output, switching voltage	AC 24...230 V
Relay output, switching current	4 x 2(2) A
Dimensions (W x H x D)	144 × 96 × 109 mm

	Stock No.	Product No.
	S55370-C136	**RVP340**

RVP350

Heating controller for 1 heating circuit and d.h.w.

Weather-compensated flow temperature control of heating circuit with or without room influence, d.h.w. heating and demand based boiler temperature control.

Key functions
In addition to the functions of the RVP340, the RVP350 provides the following:
- 3 preprogrammed plant types can be selected, with automatic assignment of the functions required for each plant type
- Weather-compensated flow temperature control through control of valve (mixing) in a heating circuit
- Demand based control of the boiler temperature through control of the burner
- D.h.w. heating with charging pump, electric immersion heater and solar collector

D.h.w. control
D.h.w. control independent of the heating circuit. Control can be enabled as follows:
- According to its own 7-day program
- According to the program of the heating circuit
- According to the programs of the zone controllers on the data bus
- Permanently (24 hours a day)

D.h.w. heating features a legionella function, which can be deactivated. Legionella protection is activated once a week. The d.h.w. temperature is acquired with sensors or thermostats.

Boiler temperature control
Boiler temperature control operates as demand-dependent 2-position control. The boiler temperature is controlled through cycling of a 1- or a 2-stage burner (direct burner control). When there is no heat request, the boiler will either be shut down or maintained at the minimum temperature (selectable). Both minimum and maximum limitation of the boiler temperature are adjustable.

Data sheet	N2545
Operating voltage	AC 230 V
Frequency	50 Hz
Power consumption	7 VA
Analog input, signal	LG-Ni1000 NTC 575
Digital inputs	Status contact
Relay output, switching voltage	AC 24...230 V
Relay output, switching current	2 x 2(2) A 7 x 1(1) A
Dimensions (W x H x D)	144 × 96 × 109 mm

Stock No.	Product No.
S55370-C137	**RVP350**

Heating controller for 2 heating circuits and d.h.w.

RVP360

Weather-compensated flow temperature control of 2 independent heating circuits with or without room influence, d.h.w. heating and demand-dependent boiler control.

Key functions
In addition to the functions of the RVP350, the RVP360 provides the following:
- 6 preprogrammed plant types can be selected, with automatic assignment of the functions required for each plant type
- Control of 2 mixing heating circuits
- Control of 1 pump heating circuit and 1 mixing heating circuit

Data sheet	N2546
Operating voltage	AC 230 V
Frequency	50 Hz
Power consumption	8 VA
Analog input, signal	LG-Ni1000 NTC 575
Relay output, switching voltage	AC 24...230 V
Relay output, switching current	2 x 2(2) A 9 x 1(1) A
Dimensions (W x H x D)	144 × 96 × 109 mm

	Stock No.	Product No.
	S55370-C139	**RVP360**

Field devices for RVP3..

Product Title	Data sheet	Stock No.	Product No.
Outside sensor LG-Ni1000	N1811	BPZ:QAC22	**QAC22**
Outside sensor NTC 575 Ohm	N1811	BPZ:QAC32	**QAC32**
Strap-on temperature sensor LG-Ni1000	N1801	BPZ:QAD22	**QAD22**
Immersion temperature sensor 100 mm LG-Ni1000, with protection pocket	N1781	BPZ:QAE2120.010	**QAE2120.010**
Cable temperature sensor for high-temperature applications (180°C)	N1833	BPZ:QAP21.2	**QAP21.2**
Cable temperature sensor silicone 1.5 m, LG-Ni1000	N1831	BPZ:QAP21.3	**QAP21.3**
Digital room unit	N1635	BPZ:QAW50	**QAW50**
Digital room unit with address selector	N1635	BPZ:QAW50.03	**QAW50.03**
Multifunctional room operator unit	N1637	BPZ:QAW70..	**QAW70..**
Remote room temperature sensor		BPZ:QAW44	**QAW44**
Room temperature sensor LG-Ni1000	N1721	BPZ:QAA24	**QAA24**
Front module with passiv temperature measurement, LG-Ni1000	N1408	S55720-S133	AQR2531ANW

NEW PRODUCT

Application examples RVP3..

These are only a few examples of many applications that can be done with the family of controllers: RVP3...
More applications are described in "HIT" (the HVAC project engineering tool with a library of over 300 pre-configured HVAC-applications) and in the RVP3.. data sheet.

RVP340

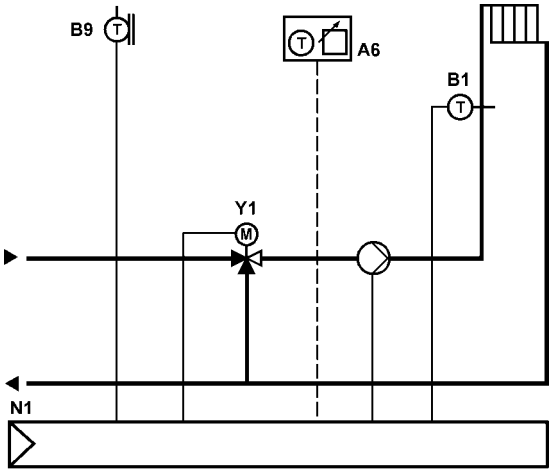

Weather-compensated heating system, one heating circuit

- Weather-compensated flow temperature control with 3-position actuator acting on mixing valve
- Frost protection for building and plant
- Digital yearly time switch
- Time switch program with 3 heating periods
- Flow temperature limit control
- ECO function switches off heating depending on outside temperature
- Room temperature-dependent boost heating and quick setback (with room unit only or with building model)

RVP35..

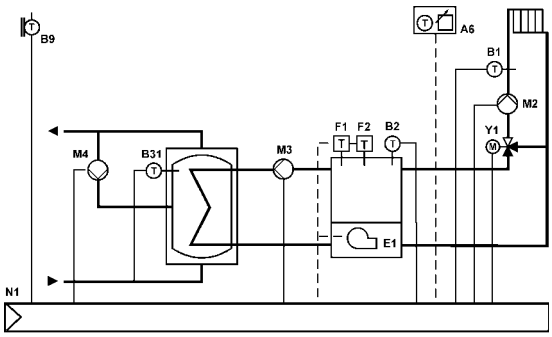

Weather-compensated heating system, heat generation, one heating circuit and d.h.w

- Weather-compensated flow temperature control with 3-point actuator acting on mixing valve
- Demand-dependend flow temperature control acting on boiler with single- or two-stage burner
- Frost protection for building and plant
- Digital yearly time switch
- 2 time switch programs, each with 3 heating periods
- Flow temperature limit control
- ECO function switches off heating depending on outside temperature
- Room temperature-dependent boost heating and quick setback (with room unit only or with building model)

RVP36..

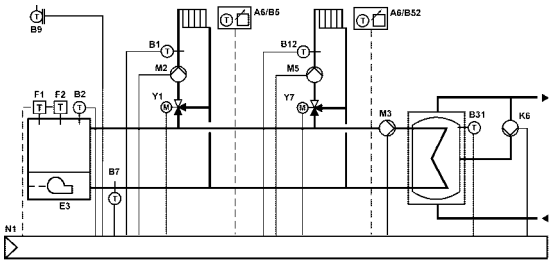

Weather-compensated heating system, heat generation, two heating circuits and d.h.w.

- Weather-compensated flow temperature control with 3-point actuator acting on mixing valve
- Demand-dependend flow temperature control acting on boiler with single- or two-stage burner
- Frost protection for building and plant
- Digital yearly time switch
- 2 time switch programs, each with 3 heating periods
- Separate time switch program for d.h.w.
- Flow temperature limit control
- ECO function switches off heating depending on outside temperature
- Room temperature-dependent boost heating and quick setback (with room unit only or with building model)

Multifunctional Heating Controllers RVL4..

Multifunctional heating controller for use in all types of residential and nonresidential buildings, configured for all standard heating applications. The RVL controllers provide weather-compensated flow temperature control and preprogrammed plant types with automatic assignment of the functions required for each type of plant.
The RVL controllers are characterized by the easy-to-understand user interface, large display and setting features:
- Analog heating curve
- Room temperature setpoint knob
- Proven operating line principle
- Setting level fo the heating engineer
- Communication facilities
- Remote operation

Operating voltage	AC 230 V
Frequency	50 Hz
Relay output, switching voltage	AC 24...230 V
Relay output, switching current	2 A
Dimensions (W x H x D)	144 x 144 x 113 mm

Heating controller for 1 heating circuit or boiler temperature control RVL480

Key functions
Weather-compensated flow temperature control, with or without room influence
6 preprogrammed plant types are provided

Plant system
- Control of a mixing valve serving a heating zone (space heating)
- Control of a burner (1- or 2-stage)
- Control of a valve in the primary return of a heating zone with district heat connection
- Demand-dependent control (precontrol) of a mixing valve / of the boiler temperature / of a heat exchanger (heat demand signal via data bus)

Additional functions
The RVL480 offers the following functions (no submodules or extra devices required):
- Display of parameters, actual values, operating states and fault status signals
- 7-day program with 3 heating periods per day
- 2 additional programs, each with 3 switching periods per day
- Automatic summer/winter changeover
- Holiday program (up to 8 holiday periods per year)
- Optimum start/stop in accordance with the heating program (with or without room influence)
- Automatic ECO function, depending on the outside temperature and the type of building construction
- Optional remote selection of operating modes (via room unit or external switch)
- Scalable DC 0...10 V output for passing on the heat request to other devices
- Quick setback and boost heating
- Preselection of flow temperature setpoint via external contact
- Minimum and maximum limitation of the flow temperature
- Minimum and maximum limitation of the return temperature (shifting / constant)
- Maximum limitation of the room temperature
- Communication with other devices via the data bus
- Limitation of the return temperature differential (DRT) for district heat applications
- Frost protection and pump protection
- Flow temperature alarm

Data sheet	N2540
Power consumption	7 VA

Stock No.	Product No.
BPZ:RVL480	**RVL480**

RVL481

Heating controller for boiler temperature control and d.h.w. heating

Key functions
Weather-compensated flow temperature control, with or without room influence, with simultaneous demand-compensated boiler and DHW control.
29 preprogrammed plant types can be selected from a combination of 6 heating applications and 5 DHW applications.

Heating circuit plant types
- Control of a mixing valve serving a heating circuit (space heating)
- Control of a burner (1- or 2-stage)
- Control of a valve in the primary return of a heating zone with district heat connection
- Demand-dependent control (precontrol) of a mixing valve / of the boiler temperature / of a heat exchanger (heat demand signal via data bus)

DHW plant types
- Charging of DHW storage tank through control of a charging pump.
- Charging of DHW storage tank through control of a mixing valve
- Charging of DHW storage tank through control of a diverting valve
- DHW heating via heat exchanger through control of a 2-port valve in the primary return
- DHW heating with electric immersion heater only
- DHW heating with solar collector

Additional functions
In addition to the functions of the RVL480, the RVL481 offers the following functions (no submodules or extra devices required):
- 2 programs for heating and DHW, each with 3 heating periods per day
- 1 multifunctional relay for switching on/off the plant according to various parameters and functions

Data sheet	N2541		
Power consumption	9 VA		
		Stock No.	Product No.
		BPZ:RVL481	**RVL481**

Heating controller for boiler temperature control for modulating or 2-stage burners with d.h.w. heating

RVL482

Key functions
Weather-compensated flow temperature control, with or without room influence, with simultaneous demand-compensated boiler and DHW control.
21 preprogrammed plant types can be selected from a combination of 5 heating applications and 4 DHW applications.

Heating circuit plant types
- Control of space heating through control of a mixing valve in the heating circuit
- Control of space heating through control of a mixing valve with simultaneous demand-dependent control of the boiler temperature
- Control of space heating through control of mixing valve and boiler, plus minimum limitation of the boiler return temperature with own mixing valve
- Demand-dependent control (precontrol) of the boiler temperature (heat demand signal via bus)
- Demand-dependent control (precontrol) of the boiler temperature with minimum limitation of the boiler return temperature via mixing valve (heat demand signal via bus)

DHW plant types
- Charging of DHW storage tank through control of a charging pump.
- Charging of DHW storage tank through control of a mixing valve
- DHW heating via heat exchanger through control of a 2-port valve in the primary return
- DHW heating through electric immersion heater only
- DHW heating with solar collector

Additional functions
In addition to the functions of the RVL480 and RVL481, the RVL482 offers the following functions:
- 2 scalable DC 0...10 V inputs for heat demand signals from external consumers
- Connection facility for solar and wind sensor (refer to chapter "Sensors")
- Control of a boiler or circulating pump
- Optional selection of circulating pump/bypass pump
- Three 7-day programs, each with 3 heating periods per day

Data sheet	N2542
Power consumption	9 VA

Stock No.	Product No.
BPZ:RVL482	**RVL482**

RVL479

Heating controller for a second heating circuit

Application
Heating controller for use in all types of buildings that require specific control of a second heating zone at an attractive price.

Key functions
The RVL479 operates with a partner unit, for independent weather-compensated control of a second heating zone.
1 preprogrammed heating application: Space heating via control 3-position of a mixing valve.

Additional functions
- Dedicated control of the second heating zone makes it possible to use an independent user interface for diagnostics
- Separate 7-day program with 3 heating periods per day
- Separate holiday program
- Dedicated display of parameters for the second zone (operating state and fault status signals)
- Independent optimum start/stop for the second heating zone
- Minimum and maximum limitation of the flow temperature
- Minimum limitation of the return temperature
- Maximum limitation of the room temperature
- Communication with other devices via LPB data bus
- Transmission and common usage of data (outside temperature, heat demand, alarms, etc.)
- Frost protection and pump protection

Data sheet	N2543		
Power consumption	7 VA		
		Stock No.	Product No.
		BPZ:RVL479	**RVL479**

Suitable partner units for RVL479

Product Title	Data sheet	Stock No.	Product No.
Heating controller for 1 heating circuit or boiler temperature control	N2540	BPZ:RVL480	**RVL480**
Heating controller for boiler temperature control and d.h.w. heating	N2541	BPZ:RVL481	**RVL481**
Heating controller for boiler temperature control for modulating or 2-stage burners with d.h.w. heating	N2542	BPZ:RVL482	**RVL482**

Field devices for RVL4..

Product Title	Data sheet	Stock No.	Product No.
Outside sensor LG-Ni1000	N1811	BPZ:QAC22	**QAC22**
Outside sensor NTC 575 Ohm	N1811	BPZ:QAC32	**QAC32**
Strap-on temperature sensor LG-Ni1000	N1801	BPZ:QAD22	**QAD22**
Immersion temperature sensor 100 mm LG-Ni1000, with protection pocket	N1781	BPZ:QAE2120.010	**QAE2120.010**
Cable temperature sensor for high-temperature applications (180°C)	N1833	BPZ:QAP21.2	**QAP21.2**
Cable temperature sensor silicone 1.5 m, LG-Ni1000	N1831	BPZ:QAP21.3	**QAP21.3**
Solar sensor	N1943	BPZ:QLS60	**QLS60**
Room temperature sensor LG-Ni1000	N1721	BPZ:QAA24	**QAA24**
Front module with passiv temperature measurement, LG-Ni1000	N1408	S55720-S133	**AQR2531ANW**
Digital room unit	N1635	BPZ:QAW50	**QAW50**
Multifunctional room operator unit	N1637	BPZ:QAW70..	**QAW70..**
Remote room temperature sensor		BPZ:QAW44	**QAW44**
Conduit box with surge protection for solar panel sensor	N2488	BPZ:AGS2S.200/1091	**AGS2S.200/109**

NEW PRODUCT

QAW50

Digital room unit

With 3 analog operating elements:
- Operating mode selector
- Occupancy button
- Knob for setpoint readjustments

Data sheet	N1635
Setpoint readjustment range	±3 K
Measuring range, temperature	0...32 °C
Degree of protection	IP30
Communication	PPS
Connection cable	2-wire

Stock No.	Product No.
BPZ:QAW50	**QAW50**

QAW50.03

Digital room unit with address selector

Same function as QAW50, but addressable

Data sheet	N1635

Stock No.	Product No.
BPZ:QAW50.03	**QAW50.03**

QAW70..

Multifunctional room operator unit

Programmable unit with display of date, time of day, room temperature, outside temperature, setting values and current 7-day program. With knob for manual setpoint readjustments and presence button for manually activating the savings program

Data sheet	N1637

Range overview QAW70..

Product Title	Data sheet	Stock No.	Product No.
Multifunctional room unit, instructions in en, de, fr, it	N1637	BPZ:QAW70-A	**QAW70-A**
Multifunctional room unit, instructions in nl, sv, el, pl	N1637	BPZ:QAW70-B	**QAW70-B**

Remote room temperature sensor

QAW44

For weighted averaging of the room temperature with the digital room unit QAW20 (SYNERGYR) and QAW70 (SIGMAGYR).

	Stock No.	Product No.
	BPZ:QAW44	**QAW44**

Application examples RVL4..

These are only a few examples of many applications that can be done with the family of controllers: RVL4…
More applications are described in "HIT" (the HVAC project engineering tool with a library of over 300 pre-configured HVAC-applications) and in the RVL4.. data sheet.

RVL480

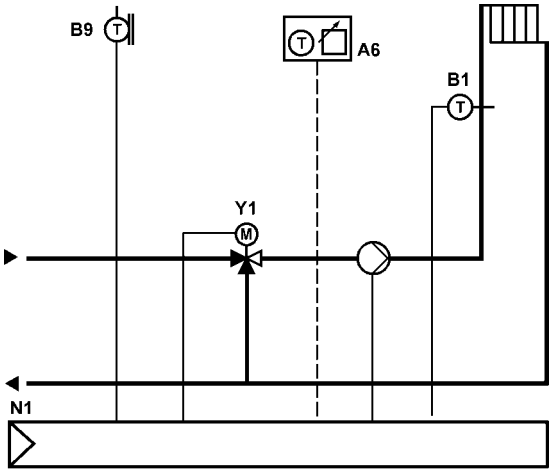

Weather-compensated heating system, one heating circuit

- Weather-compensated flow temperature control with 3-position actuator acting on mixing valve
- Frost protection for building and plant
- Digital yearly time switch
- Time switch program with 3 heating periods
- Flow temperature limit control
- ECO function switches off heating depending on outside temperature
- Room temperature-dependent boost heating and quick setback (with room unit only or with building model)
- Analog setting of heating curve

RVL481

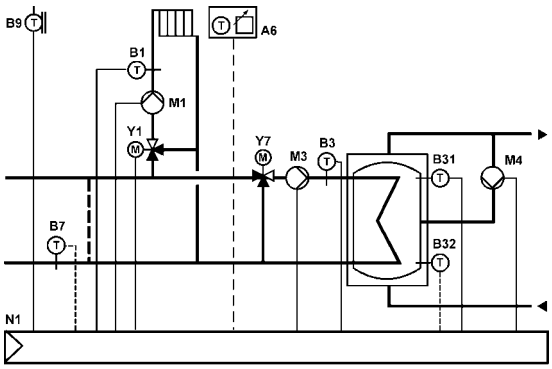

Weather-compensated heating system, one heating circuit and d.h.w

- Weather-compensated flow temperature control with 3-point actuator acting on mixing valve
- Frost protection for building and plant
- Digital yearly time switch
- 3 time switch programs, each with 3 heating periods
- Flow temperature limit control
- ECO function switches off heating depending on outside temperature
- Room temperature-dependent boost heating and quick setback (with room unit only or with building model)
- Analog setting of heating curve and room temperature setpoint

RVL482

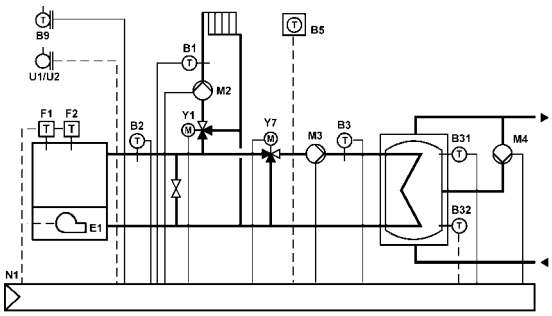

Weather-compensated heating system, heat generation, one heating circuit, d.h.w.

- Weather-compensated flow temperature control with 3-point actuator acting on mixing valve
- Demand-dependend flow temperature control acting on boiler with single- or two-stage burner
- Frost protection for building and plant
- Digital yearly time switch
- 3 time switch programs, each with 3 heating periods
- Flow temperature limit control
- ECO function switches off heating depending on outside temperature
- Room temperature-dependent boost heating and quick setback (with room unit only or with building model)
- Analog setting of heating curve and room temperature setpoint

Heating controller

RMH760B..

- Heating controller as primary controller or main controller (district heat) or heating circuit controller
- Boiler temperature control
- Control of max. 3 heating circuits and DHW heating (7 variants available) with optional extension modules
- Tested, predefined applications (refer to Application Catalog)
- Flexible configuration
- Clear-text operation with separate operator unit (plug-in type or detached)
- Integrated KNX bus communication
- No commissioning tool required

Extension modules complement the Synco 700 heating controller and offer extra functions. Controller and extension modules are interconnected via plug-in connectors. The extension modules are attached to the controller and do not operate autonomously. Full operation from commissioning to enduser operation via the operator unit.

Available extension modules:
2 heating circuit modules RMZ782B
1 DHW module RMZ783B
1 universal module RMZ787
2 universal modules RMZ789
A total of 4 extension modules can simultaneously be used with the Synco 700 heating controller.

Available operator units:
- Plug-in type operator unit RMZ790
- Detached operator unit RMZ791
- Bus operator unit RMZ792

Data sheet	N3133
Operating voltage	AC 24 V
Frequency	50/60 Hz
Power consumption	12 VA
Universal inputs, number	6
Universal input, signal	LG-Ni1000 2 x LG-Ni1000 T1 (PTC) Pt1000 NTC 575 0...1000 Ohm 1000...1175 Ohm DC 0...10 V Digital pulse contact Potential-free digital status contact
Analog outputs, number	2
Analog output, signal	DC 0...10 V
Analog output, current	Max. 1 mA
Relay outputs, number	5
Relay outputs	Potential-free switching contact
Relay output, switching voltage	AC 19...250 V
Relay output, switching current	4 (3) A
Communication	KNX (KNX TP1)

Range overview RMH760B..

Product Title	Data sheet	Stock No.	Product No.
Heating controller with languages de, fr, it, es	N3133	BPZ:RMH760B-1	**RMH760B-1**
Heating controller with languages de, en, fr, nl	N3133	BPZ:RMH760B-2	**RMH760B-2**
Heating controller with languages da, fi, sv, no	N3133	BPZ:RMH760B-3	**RMH760B-3**
Heating controller with languages pl, cs, sk, hu, ru, bg	N3133	BPZ:RMH760B-4	**RMH760B-4**
Heating controller with languages sr, hr, sl, ro, el, tr	N3133	BPZ:RMH760B-5	**RMH760B-5**

Boiler sequence controller

RMK770..

Modular heating controller with integrated control and supervisory functions for:
- Up to 6 boilers
- Multistage or modulating burners
- Precontrol
- Heating circuit
- Tested, predefined applications (refer to Application Catalog)
- Flexible configuration
- Clear-text operation with separate operator unit (plug-in type or detached)
- Integrated KNX bus communication
- No commissioning tool required

Extension modules complement the Synco 700 boiler sequence controller and offer extra functions. The extension modules are attached to the controller. They do not operate autonomously. Full operation from commissioning to enduser operation via the operator unit.

Available extension modules:
3 universal modules RMZ785
3 universal modules RMZ787
3 universal modules RMZ788
3 universal modules RMZ789

A total of 3 extension modules can simultaneously be used with the Synco 700 boiler sequence controller.

Available operator units:
- Plug-in type operator unit RMZ790
- Detached operator unit RMZ791
- Bus operator unit RMZ792

Data sheet	N3132
Operating voltage	AC 24 V
Frequency	50/60 Hz
Power consumption	12 VA
Universal inputs, number	8
Universal input, signal	0...1000 Ohm 1000...1175 Ohm 2 x LG-Ni1000 DC 0...10 V Potential-free digital status contact LG-Ni1000 Pt1000 T1 (PTC)
Digital inputs, number	2
Digital inputs	Potential-free input signal
Digital input, contact query	5 mA DC 15 V
Analog outputs, number	2
Analog output, signal	DC 0...10 V
Analog output, current	Max. 1 mA
Relay outputs, number	7
Relay outputs	AC 19...265 V, max. 4(3) A Potential-free switching contact
Communication	KNX (KNX TP1)

Range overview RMK770..

Product Title	Data sheet	Stock No.	Product No.
Boiler sequence controller with languages de, fr, it, es	N3132	BPZ:RMK770-1	**RMK770-1**
Boiler sequence controller with languages de, fr, en, nl	N3132	BPZ:RMK770-2	**RMK770-2**
Boiler sequence controller with languages da, fi, sv, no	N3132	BPZ:RMK770-3	**RMK770-3**
Boiler sequence controller with languages pl, cs, sk, hu, ru, bg	N3132	BPZ:RMK770-4	**RMK770-4**
Boiler sequence controller with languages sr, hr, sl, ro, el, tr	N3132	BPZ:RMK770-5	**RMK770-5**

Application examples RMH760B.. and RMK770..

These are only a few examples of many applications that can be done with the with Synco™700 controllers: RMH760B.. / RMK770..
More Synco™700 applications are described in "HIT" (the HVAC project engineering tool with a library of over 300 pre-configured HVAC-applications) and in the RMH760B.. / RMK770.. data sheet.

The evaluation of the energy efficiency classification is based on EN15232:2007. For a determination of the energy efficiency classification of the application, please use the "HIT Tool".
Further details are available in the manual "Building automation - impact on energy efficiency" in our HIT Online.
www.siemens.com/hit

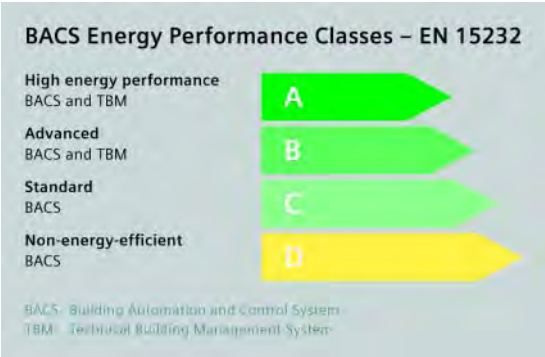

Weather-compensated heating control, one heating circuit, d.h.w

RMH760B..

H0CB02 H6B HQ

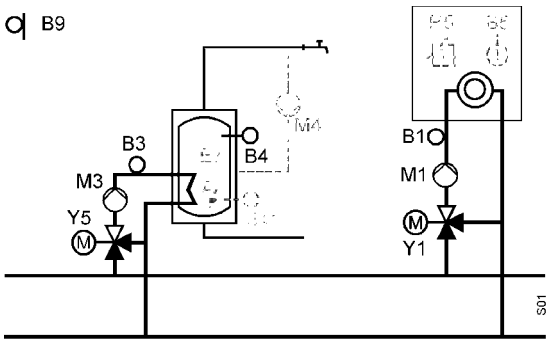

- Weather-compensated flow temperature control with adjustable setpoints for Comfort, Precomfort, Econo-my and Protective Mode
- Frost protection for the building and the plant
- Changeover between 3 room temperature setpoints according to the time switch program
- Yearly clock
- Holiday and special day program with up to 16 periods
- 7-day program (maximum six switching points per day)
- Time switch program for the heating circuit
- Limitation of the flow temperature
- Automatic heating limit with adjustable limits
- Optimum start control
- Quick setback
- Control of the storage tank charging temperature with adjustable setpoints for Normal, Reduced, Legionella and Protective mode
- Time switch program for DHW heating

The indicated energy efficiency classification can be attained only if the following functions are implemented:

- Integrated individual room control including demand control "by occupancy, air quality, etc." (Heating circuits for precontrol in individual room control)
- Indoor temperature control (Room temperature in individual room control via KNX requires extra configuration)
- Variable speed pump control with constant Δp (The pump must have integrated output control)
- Variable temperature depending on the load (Heat demand signal required)

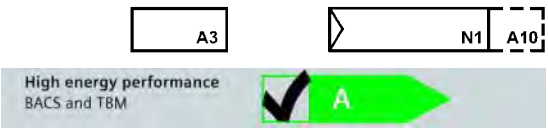

To fulfill the classification, the plant must be equipped with all indicated functions.

RMH760B..

HCDA01 H6B HQ

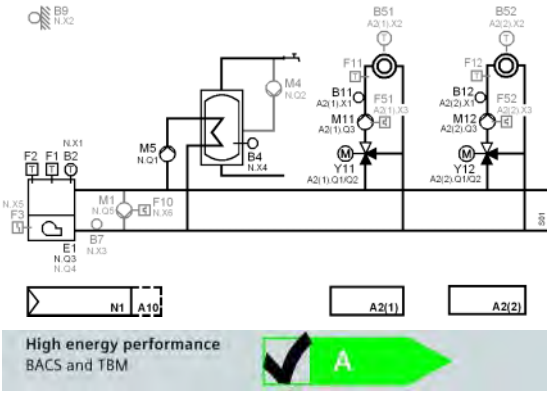

To fulfill the classification, the plant must be equipped with all indicated functions.

Weather-compensated heating control, heat generation, 2 heating circuits, d.h.w.

- Weather-compensated flow temperature control with adjustable setpoints for Comfort, Precomfort, Economy and Protective Mode
- Frost protection for the building and the plant
- Changeover between 3 room temperature setpoints according to the time switch program
- Yearly clock
- Holiday and special day program with up to 16 periods
- 7-day program (maximum six switching points per day)
- Time switch programs for heating circuits 1 and 2
- Limitation of the flow temperature
- Automatic heating limit with adjustable limits
- Optimum start control
- Quick setback
- Control of the storage tank temperature with adjustable setpoints for Normal, Reduced, Legionella and Protective mode
- Time switch program for DHW heating
- Demand-compensated boiler temperature control
- Protective boiler startup by reducing the consumer setpoints
- Control of a single-stage or 2-stage burner
- Control of the boiler temperature via modulating burner with DC 0...10 V control
- Burner fault contact

The indicated energy efficiency classification can be attained only if the following functions are implemented:

- Integrated individual room control including demand control “by occupancy, air quality, etc.” (Heating circuits for precontrol in individual room control)
- Indoor temperature control (Room temperature in individual room control via KNX requires extra configuration)
- Variable speed pump control with constant Δp (The pump must have integrated output control)
- enerator; Variable temperature depending on the load

Weather-compensated heating system, district heating connection, 2 heating circuits, d.h.w

RMH760B..

DADC04 H6B HQ

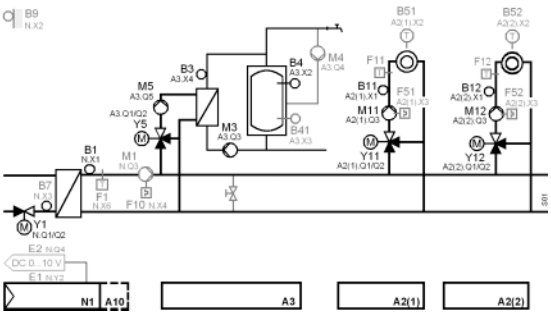

To fulfill the classification, the plant must be equipped with all indicated functions.

- Weather-compensated flow temperature control with adjustable setpoints for Comfort, Precomfort, Economy and Protective mode
- Frost protection for the building and the plant
- Changeover between 3 room temperature setpoints according to the time switch program
- Yearly clock
- Holiday and special day program with up to [SoftReturn]16 periods
- 7-day program (maximum six switching points [SoftReturn]per day)
- Time switch programs for the heating circuits
- Control of the storage tank charging temperature with adjustable setpoints for Normal, Reduced, Legionella and Protective mode
- Time switch program for DHW heating
- Limitation of the flow temperature
- Automatic heating limit with adjustable limits
- Optimum start control
- Quick setback
- Demand-compensated primary control

The indicated energy efficiency classification can be attained only if the following functions are implemented:

- Integrated individual room control including demand control “by occupancy, air quality, etc.” (Heating circuits for precontrol in individual room control)
- Indoor temperature control (Room temperature in individual room control via KNX requires extra configuration)
- Variable speed pump control with constant Δp (The pump must have integrated output control)
- Intermittent control of emission and/or distribution, automatic control with optimum start/stop
- Generator; Variable temperature depending on the load

Boiler cascade, 2 boilers with 2-stage burners

RMK770..

K2.2

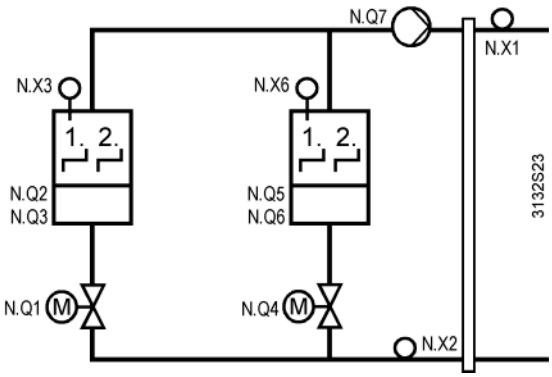

- Control of the boiler temperature via 2-stage burner
- Control of the shutoff valves
- Common flow and return temperature control
- Control of the main pump

RMK770..

K6.2

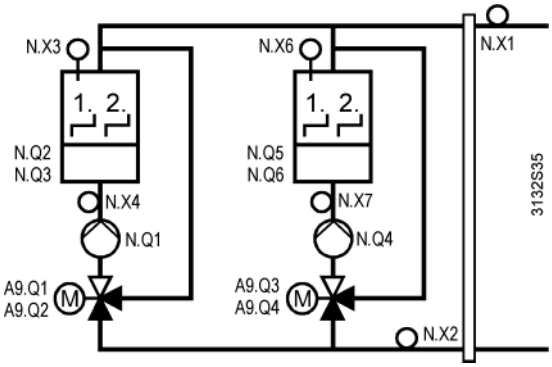

Boiler cascade, 2 boilers with 2-stage burners

- Control of the boiler temperature via 2-stage burner
- Controlled boiler return temperature with 3-port valve and 3-position or DC 0...10 V actuator
- Control of the boiler pumps
- Common flow and return temperature control
- Extension module RMZ789 needed

RMK770..

HFF003 MK7 HQ

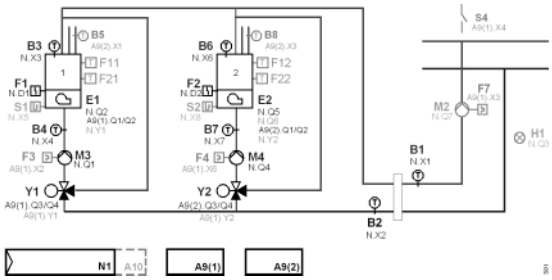

Advanced
BACS and TBM

To fulfill the classification, the plant must be equipped with all indicated functions.

Dual-boiler plant, boiler pumps, boiler return with 3-port valve

- Control of the boiler sequence
- Automatic changeover of lead boiler depending on the number of boiler operating hours
- Control of the boiler pumps
- Control of the boiler temperature via modulating burner with 3-position or DC 0...10 V control
- Burner fault contact
- Limitation of the burner's minimum on time
- Controlled maintained boiler return temperature with 3-port valve and 3-position or DC 0...10 V actuator
- Protective boiler startup
- Maximum and minimum limitation of the boiler tempe-rature
- Selection of boiler operating mode
- Flue gas measuring mode, boiler testing mode
- Burner hours run and burner startup counter
- Minimum and maximum limitation of the flow tempera-ture
- Automatic changeover to summer operation
- (heating OFF)
- Pump overrun, pump kick
- Valve overrun, valve kick
- Acquisition and evaluation of heat requisition signals via Konnex bus

The indicated energy efficiency classification can be attained only if the following functions are implemented:

In connection with an application that fulfils the energy efficiency class B, necessary for:
- Emission control
- Control of distribution network hot watertemperature (supply or return)
- Control of distribution pumps
- Intermittent control of emission and/or distribution

Plug-in type operator unit

RMZ790

- Operator unit plugs into the Synco™ 700 controllers
- For displaying and changing plant data for service staff and enduser
- Clear-text operation
- Can be plugged in and removed during operation
- Power supply via the controller

Data sheet N3111

	Stock No.	Product No.
	BPZ:RMZ790	**RMZ790**

Detached operator unit with 3 m cable

RMZ791

Like plug-in type operator unit, but:
- Other mounting choices (typically for control panel door or wall mounting)
- Larger display
- Connection via a prefabricated 3 m cable, supplied as standard

Data sheet N3112

	Stock No.	Product No.
	BPZ:RMZ791	**RMZ791**

Bus operator unit

RMZ792

Communicating operator unit for operating up to 150 controllers, room units and central units from the Synco™ 700 range via KNX bus.
Favorite pages can be freely defined. Designed for fixed installation or mobile use.

Data sheet N3113

	Stock No.	Product No.
	BPZ:RMZ792	**RMZ792**

Room unit with KNX bus

QAW740

Configurable unit with display of operating mode, timer, temperatures and fault.

With 3 operating elements:
- Knob for setpoint readjustments
- Operating mode button
- Timer button

Data sheet N1633

Setpoint readjustment range	±3 K
Measuring range, temperature	0...50 °C
Degree of protection	IP20
Communication	KNX TP1 EE
Connection cable	2-wire

	Stock No.	Product No.
	BPZ:QAW740	**QAW740**

RMZ78..

Universal modules

Additional inputs and outputs required by the Synco™ 700 controllers can be provided by these modules. A description of the functions is given with the relevant controller module.

Data sheet	N3146
Power consumption	2 VA
Universal input, signal	0...1000 Ohm 1000...1175 Ohm 2 x LG-Ni1000 DC 0...10 V Potential-free digital status contact LG-Ni1000 Pt1000 T1 (PTC)
Analog output, signal	DC 0...10 V
Analog output, current	Max. 1 mA
Relay outputs	switching contact, potential-free
Relay output, switching voltage	AC 19...265 V
Relay output, switching current	4 (3) A

Range overview RMZ78..

Universal inputs, number	Analog outputs, number	Relay outputs, number	Stock No.	Product No.
8	0	0	BPZ:RMZ785	**RMZ785**
4	0	4	BPZ:RMZ787	**RMZ787**
4	2	2	BPZ:RMZ788	**RMZ788**
6	2	4	BPZ:RMZ789	**RMZ789**

RMZ782B

Heating circuit module

- Weather-compensated flow temperature control via heating circuit's mixing valve
- Control of heating circuit pump

The available heating circuit control and supervisory functions are the same as those of the RMH760B

Data sheet	N3136
Voltage supply	Supply from controller module
Power consumption	2 VA
Universal inputs, number	3
Universal input, signal	LG-Ni1000 0...1000 Ohm 1000...1175 Ohm DC 0...10 V Pt1000 NTC 575 T1 (PTC)
Analog outputs, number	1
Analog output, signal	DC 0...10 V
Analog output, current	Max. 1 mA
Relay outputs, number	3
Relay outputs	Switching contact, potential-free
Relay output, switching voltage	AC 19...250 V
Relay output, switching current	4 (3) A

Stock No.	Product No.
BPZ:RMZ782B	**RMZ782B**

DHW module

RMZ783B

- Control of the storage tank temperature
- Storage tank charging with integrated coil, with pump or mixing valve
- Storage tank charging with detached heat exchanger, with pump and mixing valve
- Storage tank charging according to a time program
- Control of the circulating pump according to a time program

The technical data correspond to the heating circuit module RMZ782B, except:

Data sheet	N3136
Universal inputs, number	4
Analog outputs, number	1
Relay outputs, number	5

Stock No.	Product No.
BPZ:RMZ783B	**RMZ783B**

Module connector

RMZ780

Module connector for detached mounting of extension modules within the control panel.
Distance for detached mounting: Maximum 10 m.

Data sheet	N3138

Stock No.	Product No.
BPZ:RMZ780	**RMZ780**

Sensors, setpoint adjusters

Product Title	Data sheet	Stock No.	Product No.
Outside sensor LG-Ni1000	N1811	BPZ:QAC22	**QAC22**
Outside sensor NTC 575 Ohm	N1811	BPZ:QAC32	**QAC32**
Strap-on temperature sensor LG-Ni1000	N1801	BPZ:QAD22	**QAD22**
Strap-on temperature sensor with cable LG-Ni1000	N1802	BPZ:QAD26.220	**QAD26.220**
Immersion temperature sensor 100 mm LG-Ni1000, with protection pocket	N1781	BPZ:QAE2120.010	**QAE2120.010**
Immersion temperature sensor Ø 6 mm with cable and fitting	N1790	BPZ:QAE26.9	**QAE26.9**
Cable temperature sensor PVC 2 m, LG-Ni1000	N1831	BPZ:QAP22	**QAP22**
Solar sensor	N1943	BPZ:QLS60	**QLS60**
Setpoint adjuster, passive, scale 0...50 °C (exchangeable)	N1991	BPZ:BSG21.1	**BSG21.1**
Flue gas temperature sensor Pt1000	N1846	BPZ:FGT-PT1000	**FGT-PT1000**

Monitors

Product Title	Data sheet	Stock No.	Product No.
Flow switch for use in hydraulic systems, PN10, DN32...200	N1592	BPZ:QVE1900	**QVE1900**
Thermal reset limit thermostat	N1202	BPZ:RAK-TW.1..H	**RAK-TW.1..H**
Temperature limiter	N1206	BPZ:RAK-TB.1..M	**RAK-TB.1..M**
Safety limit thermostat	N1204	BPZ:RAK-ST..M	**RAK-ST..M**

Room units

Product Title	Data sheet	Stock No.	Product No.
Room temperature sensor LG-Ni1000	N1721	BPZ:QAA24	**QAA24**
Room unit with room temperature sensor and setpoint readjuster -3...3 K	N1721	BPZ:QAA27	**QAA27**
Front module with passiv temperature measurement, LG-Ni1000	N1408	S55720-S133	**AQR2531ANW**
Front module with passiv temperature measurement, Pt1000	N1408	S55720-S134	**AQR2531BNW**
Room temperature sensor LG-Ni1000 for mounting on recessed conduit boxes	N1722	BPZ:QAA64	**QAA64**
Room unit with KNX bus	N1633	BPZ:QAW740	**QAW740**

Transformers

Product Title	Data sheet	Stock No.	Product No.
Transformers	N5536	BPZ:SEM62..	**SEM62..**

Service tool

Product Title	Data sheet	Stock No.	Product No.
Service tool for KNX / LPB	N5655	BPZ:OCI700.1	**OCI700.1**

District heating controller

RVD12..

Control of district heat substations, space heating and d.h.w. heating.
Optimized for low return temperatures in district heating networks.

- 3 ready programmed and preselected plant types
- Straightforward, easy-to-understand operation
- Analog adjustment of room temperature setpoint, other adjustments with operating lines
- Display of time of day, time program, setpoints, actual values, limitations, errors, etc.
- Optional remote operation via room unit
- 2 independent switching programs each with 3 occupancy times per day
- Holiday function (via room unit)
- DRT limitation for the reduction of peak loads
- Maximum limitation of the return temperature on the primary side
- Minimum and maximum limitation of the flow temperature
- Automatic summer / winter changeover
- Automatic ECO function
- Pump protection
- Legionella function
- Frost protection function
- Automatic monitoring of sensors with alarm indication
- Relay and sensor tests, manual operation
- Locking function for district heat parameters
- Communication via Modbus
- Display with background lighting

Plant-specific
- 1 pump heating circuit, control of the flow temperature, optionally weather-compensated / weather- and room temperature-compensated / room temperature-compensated
- D.h.w. heating:
- Storage system with integrated heat exchanger and 1 storage tank sensor
- Charging pump

Data sheet	N2510
Operating voltage	AC 230 V
Frequency	50 Hz
Power consumption	5.5 VA
Analog input, signal	LG-Ni1000 NTC 575
Frequency	50 Hz
Digital outputs	3 × AC 230 V 1(1) A 1 × AC 230 V 2(2) A
Dimensions (W x H x D)	144 x 96 x 109 mm

Range overview RVD12..

Product Title	Data sheet	Stock No.	Product No.
Controller, 3 programmed plant types, instructions in da, de, en, fi, fr, it, sv	N2510	S55370-C109	**RVD120-A**
Controller, 3 programmed plant types, instructions in bg, cs, el, pl, ro, ru	N2510	S55370-C110	**RVD120-C**

RVD14..

District heating controller

Same functionality as the RVD120, but with the following extra features:
- 8 ready programmed and preselected plant types
- Solar d.h.w. heating
- D.h.w. heating with electric immersion heater
- Refill function

Plant-specific
- Precontrol of internal control loops
- 1 pump or mixing heating circuit, flow temperature control, optionally weather-compensated / weather- and room temperature-compensated / room temperature-compensated
- D.h.w. heating:
- Instantaneous system
- Storage tank charging system with 1 or 2 storage tank sensors
- Storage system with integrated heat exchanger
- 2 charging pumps
- Circulating pump
- Solar d.h.w. heating

Data sheet	N2510
Operating voltage	AC 230 V
Frequency	50 Hz
Power consumption	6 VA
Analog input, signal	LG-Ni1000 NTC 575 DC 0...10 V
Digital inputs, number	1
Digital inputs	Flow switch
Digital outputs	5 × AC 230 V 1(1) A 4 × AC 230 V 2(2) A
Dimensions (W x H x D)	144 x 96 x 109 mm

Range overview RVD14..

Product Title	Data sheet	Stock No.	Product No.
Controller, 8 programmed plant types, instructions in da, de, en, fi, fr, it, sv	N2510	S55370-C113	**RVD140-A**
Controller, 8 programmed plant types, instructions in bg, cs, el, pl, ro, ru	N2510	S55370-C114	**RVD140-C**

Field devices for RVD..

Product Title	Data sheet	Stock No.	Product No.
Outside sensor LG-Ni1000	N1811	BPZ:QAC22	**QAC22**
Outside sensor NTC 575 Ohm	N1811	BPZ:QAC32	**QAC32**
Strap-on temperature sensor LG-Ni1000	N1801	BPZ:QAD22	**QAD22**
Immersion temperature sensor 100 mm LG-Ni1000, with protection pocket	N1781	BPZ:QAE2120.010	**QAE2120.010**
Cable temperature sensor for high-temperature applications (180°C)	N1833	BPZ:QAP21.2	**QAP21.2**
Cable temperature sensor silicone 1.5 m, LG-Ni1000	N1831	BPZ:QAP21.3	**QAP21.3**
Digital room unit	N1635	BPZ:QAW50	**QAW50**
Digital room unit with address selector	N1635	BPZ:QAW50.03	**QAW50.03**
Multifunctional room operator unit	N1637	BPZ:QAW70..	**QAW70..**
Remote room temperature sensor		BPZ:QAW44	**QAW44**
Room temperature sensor, NTC, 5...30 °C	N1725	BPZ:QAA10	**QAA10**
Pressure sensor for liquids and gases (0...10 V)	N1909	BPZ:QBE2002-P..	**QBE2002-P..**

Application examples RVD1..

These are a few examples of applications that can be done with the controllers RVD1..
More applications are described in "HIT" (the HVAC project engineering tool with a library of over 300 pre-configured HVAC-applications) and in the RVD1.. data sheet.

RVD12..

DAAA01 VD1 HQ

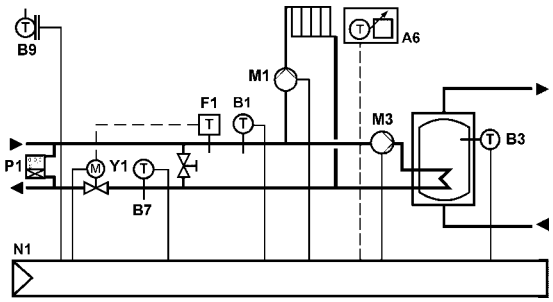

Direct system, weather-compensated heating and d.h.w.

- Weather-compensated flow temperature control with pump heating circuit
- Demand-dependend flow temperature control with 3-position actuator acting on two-port valve
- Maximum limitation of primary return temperature depending on the outside temperature
- Frost protection for building and plant
- Digital 7-day time switch
- 2 time switch programs, each with 3 heating periods
- Flow temperature limit control
- ECO function switches off heating depending on outside temperature
- Room temperature-dependent quick setback (with room sensor or with building model)
- Optional remote operation via room unit

RVD14..

DACA01 VD1 HQ

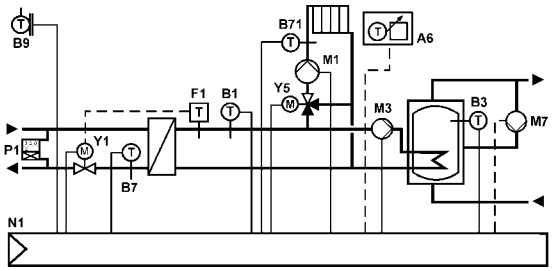

Indirect system, weather-compensated heating and d.h.w.

- Demand-dependent flow temperature control with 3-position actuator acting on primary two-port valve
- Weather-compensated flow temperature control with 3-position actuator acting on mixing valve
- Maximum limitation of primary return temperature depending on the outside temperature
- Frost protection for building and plant
- Digital 7-day time switch
- 2 time switch programs, each with 3 heating periods
- Flow temperature limit control
- ECO function switches off heating depending on the outside temperature
- Room temperature-dependent quick setback (with room sensor or with building model)
- Optional remote operation via room unit

District heating controller

RVD25..

Multifunctional heating controller for use in district heating substations and district heating plants with LPB and M-bus communication. Suited for one heating circuit with d.h.w. heating in instantaneous systems or with storage tank. 28 programmed plant types. Operating voltage AC 230 V.

Key features:
- Optimized for low return temperatures in district heating networks.
- Display of time of day, time program, setpoints, actual values, limitations, errors, etc.
- Optional remote operation via room unit
- 2 independent switching programs each with 3 occupancy times per day
- Yearly clock with automatic summer- / wintertime changeover
- Power and / or volumetric flow limitation in combination with heat meter
- Pump and valve protection
- Automatic monitoring of sensors with display of alarm
- Locking function for district heat parameters
- Optional suppression of hydraulic creep
- Frost protection function
- DRT limitation for the reduction of peak loads and of idle heat
- Maximum limitation of the return temperature on the primary side
- Minimum and maximum limitation of the flow temperature
- Optimum start / stop control of the heating system
- Automatic ECO function
- Legionella function
- Forced charging function for plant with storage tank
- Cooling down protection for the primary supply lines
- Solar d.h.w. heating
- D.h.w. heating with electric immersion heater
- Refill function
- Selectable heating period

Plant-specific:
- Precontrol internal and interconnected
- 1 mixing or pump heating circuit
- D.h.w. heating with selectable priority:
  - Instantaneous systems
  - Storage charging system
  - Storage system with integrated heat exchanger
  - 2 charging pumps
  - Circulating pump

Data sheet	N2513
Operating voltage	AC 230 V
Frequency	50 Hz
Power consumption	5.5 VA
Analog input, signal	DC 0...10 V LG-Ni1000 NTC 575
Digital inputs, number	1
Digital inputs	Pulse transmitter Status contact
Digital outputs	1 × PWM, DC 12 V 2 × AC 230 V 2(2) A 8 × AC 230 V 1(1) A
Communication	LPB (interconnected controller) M-bus (slave)
Dimensions (W x H x D)	144 x 96 x 109 mm

Range overview RVD25..

Product Title	Data sheet	Stock No.	Product No.
Controller, 28 programmed plant types, instructions in de, en, fr, it, da, fi, sv	N2513	S55370-C125	**RVD250-A**
Controller, 28 programmed plant types, instructions in pl, cs, el, ru, bg, ro	N2513	S55370-C126	**RVD250-C**

RVD26..

District heating controller

Multifunctional heating controller for use in district heating substations and district heating plants with LPB and M-bus communication. Suited for 2 heating circuits with d.h.w. heating in instantaneous systems or with storage tank. 14 programmed plant types. Operating voltage AC 230 V.

Same functionality as RVD250, but with the following extra features:
- 2 heating circuits
- Without precontrol in interconnected systems
- 3 independent switching programs each with 3 occupancy times per day

Plant-specific:
- Precontrol internal control loops
- 2 heating circuits (mixing and / or pump heating circuit): Control of flow temperature, optionally weather-compensated / weather- and room temperature-compensated / room temperature-compensated
- D.h.w. heating with selectable priority:
- Instantaneous systems
- Storage charging system
- Storage system with integrated heat exchanger
- Charging pump
- Circulating pump

Data sheet	N2515
Operating voltage	AC 230 V
Frequency	50 Hz
Power consumption	6 VA
Analog input, signal	DC 0...10 V LG-Ni1000 NTC 575
Digital inputs, number	1
Digital inputs	Pulse transmitter Status contact
Digital outputs	1 × PWM, DC 12 V 2 × AC 230 V 2(2) A 8 × AC 230 V 1(1) A
Communication	LPB (interconnected controller) M-bus (slave)
Dimensions (W x H x D)	144 x 96 x 109 mm

Range overview RVD26..

Product Title	Data sheet	Stock No.	Product No.
Controller, 14 programmed plant types, instructions in de, en, fr, it, da, fi, sv	N2515	S55370-C129	**RVD260-A**
Controller, 14 programmed plant types, instructions in pl, cs, el, ru, bg, ro	N2515	S55370-C130	**RVD260-C**

Field devices for RVD..

Product Title	Data sheet	Stock No.	Product No.
Outside sensor LG-Ni1000	N1811	BPZ:QAC22	**QAC22**
Outside sensor NTC 575 Ohm	N1811	BPZ:QAC32	**QAC32**
Strap-on temperature sensor LG-Ni1000	N1801	BPZ:QAD22	**QAD22**
Immersion temperature sensor 100 mm LG-Ni1000, with protection pocket	N1781	BPZ:QAE2120.010	**QAE2120.010**
Cable temperature sensor for high-temperature applications (180°C)	N1833	BPZ:QAP21.2	**QAP21.2**
Cable temperature sensor silicone 1.5 m, LG-Ni1000	N1831	BPZ:QAP21.3	**QAP21.3**
Digital room unit	N1635	BPZ:QAW50	**QAW50**
Digital room unit with address selector	N1635	BPZ:QAW50.03	**QAW50.03**
Multifunctional room operator unit	N1637	BPZ:QAW70..	**QAW70..**
Remote room temperature sensor		BPZ:QAW44	**QAW44**
Room temperature sensor, NTC, 5...30 °C	N1725	BPZ:QAA10	**QAA10**
Pressure sensor for liquids and gases (0...10 V)	N1909	BPZ:QBE2002-P..	**QBE2002-P..**

Application examples RVD2..

These are a few examples of applications that can be done with the controllers RVD2...
More applications are described in "HIT" (the HVAC project engineering tool with a library of over 300 pre-configured HVAC-applications) and in the RVD2.. data sheet.

RVD25..

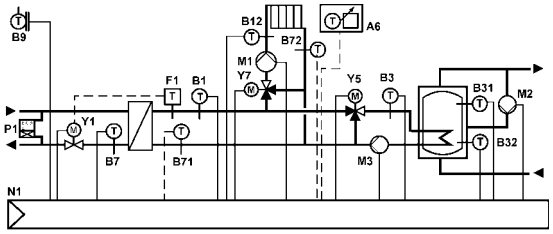

Indirect system, weather-compensated heating with mixing circuit and d.h.w

- Demand-dependent flow temperature control acting on 3-position actuator with primary two-port valve
- Weather-compensated flow temperature control with 3-position actuator acting on mixing valve
- D.h.w. temperature control - storage tank with mixing valve
- Maximum limitation of primary return temperature depending on the outside temperature
- Frost protection for building and plant
- 2 time switch programs, each with 3 heating periods
- Flow temperature limit control
- ECO function switches off heating depending on the outside temperature
- Room temperature-dependent quick setback (with room sensor only or with building model)
- Control of d.h.w. circulation pump

RVD25..

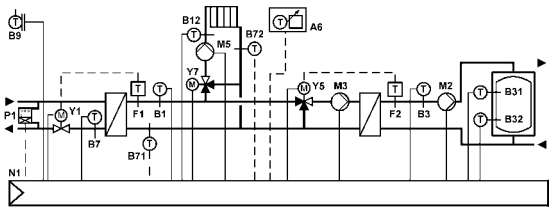

Indirect system, weather-compensated heating with mixing circuit and d.h.w

- Demand-dependent flow temperature control acting on 3-position actuator with primary two-port valve
- Weather-compensated flow temperature control with 3-position actuator acting on mixing valve
- D.h.w. temperature control - storage tank with exchanger and mixing valve
- Maximum limitation of primary return temperature depending on the outside temperature
- Frost protection for building and plant
- 2 time switch programs, each with 3 heating periods
- Flow temperature limit control
- ECO function switches off heating depending on the outside temperature
- Room temperature-dependent quick setback (with room sensor only or with building model)

RVD26..

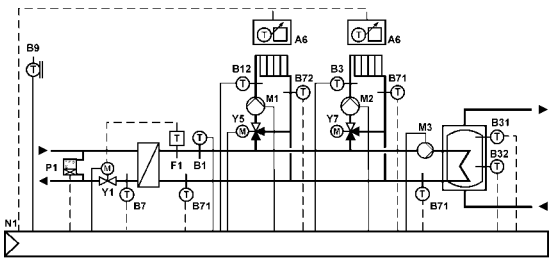

Indirect system, weather-compensated heating with 2 mixing circuits and d.h.w

- Demand-dependent flow temperature control with 3-position actuator acting on primary two-port valve
- Weather-compensated flow temperature control with 3-position actuator acting on mixing valve
- D.h.w. temperature control - storage tank
- Maximum limitation of primary return temperature depending on the outside temperature
- Frost protection for building and plant
- 3 time switch programs, each with 3 heating periods
- Flow temperature limit control
- ECO function switches off heating depending on the outside temperature
- Room temperature-dependent quick setback (with room sensor only or with building model)

Air duct temperature controller, AC 24 V, 2 outputs DC 0...10 V — RLM162

Compact electronic controller with integral duct mounted temperature sensor and setting unit combined in one device. It is designed for installation directly onto the plant. Only the wires for power supply connection and controller output need to be laid. Supplied complete with mounting flange.

Application:
Modulating temperature controller, with 1 or 2 continuous DC 0...10 V output signals. The RLM162 is used for control and limiting of extract or supply air temperatures in small HVAC plants:
- Restaurants, conference rooms, store rooms
- Lecture theatres, classrooms
- In conjunction with central air handling units

The following units can be controlled:
- Heating (or cooling) valve actuators
- Air damper actuators
- Step controllers or current valves for electric heating
- Signal converters
- DX cooling units

Features:
- Auxiliary digital output
- Compensation via outside sensor
- Connection for remote setting unit
- P or PI control (selectable)
- Service modes
- Heating and cooling modes available
- Setpoint changeover via external contact or time switch
- Heating/cooling changeover via external contact

Data sheet	N3332
Operating voltage	AC 24 V
Frequency	50/60 Hz
Power consumption	2 VA
Analog output, signal	DC 0...10 V
Analog output, current	Max. 1 mA
Analog outputs, number	2
Analog input, signal	LG-Ni1000 0...1000 Ohm DC 0...10 V
Digital input, contact query	DC 3...6 mA DC 6...15 V
Relay outputs	N.O. contact, potential-free
Relay output, switching voltage	AC 24...230 V
Relay output, switching current	2 A
Setpoint setting range	0...50 °C
Setpoint readjustment range	0...10 K
Probe length	400 mm
Type of fixing	Flange
Degree of protection	IP65
Dimensions (W x H x D)	125 × 152 × 78 mm

	Stock No.	Product No.
	BPZ:RLM162	**RLM162**

Field devices for RLM162

Product Title	Data sheet	Stock No.	Product No.
Setpoint adjuster, passive, scale 0...50 °C (exchangeable)	N1991	BPZ:BSG21.1	**BSG21.1**
Outside sensor LG-Ni1000	N1811	BPZ:QAC22	**QAC22**

Application examples Synco™ 100

These are only a few examples of many applications that can be done with the with Synco™100 controllers: RLA.. / RLE.. / RLM..
More Synco™100 applications are described in "HIT" (the HVAC project engineering tool with a library of over 300 pre-configured HVAC-applications) and in the RLA.. / RLE.. / RLM.. data sheet.

RLM162

ADC001 LM1 HQ

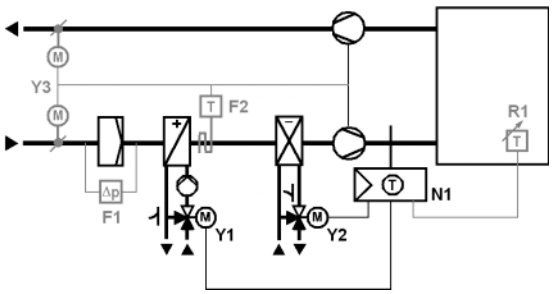

Supply air temperature control

- Controller (N1) with built-in sensor to control the room temperature via sequential control of the heat-ing valve (Y1) or the cooling valve (Y2)
- Frost protection with frost thermostat F2 (indepen-dent of controller) to open the heating valve (Y1), close the outside air dampers (Y3) and deactivate the fans
- Air damper actuator with spring return (Y3) to control the fans with an auxiliary switch

RLM162

ADC002 LA1 HQ

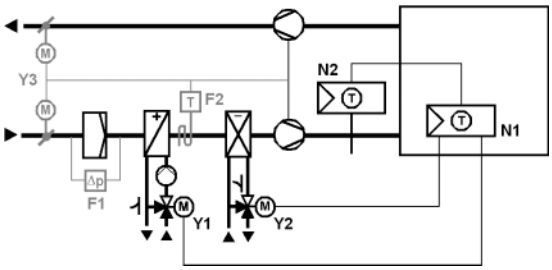

Room temperature control with limitation of supply air temperature

- Room temperature control via control of the heating valve and the cooling valve
- Limitation of supply air temperature
- Outside temperature compensation

Room temperature controller, AC 24 V, 2 outputs DC 0...10 V — RLA162

Electronic controller designed for room mounting applications. It is configurable for heating and/or cooling applications and can operate as a single controller or together with duct mounted units (RLM) for limiting.

Application:
Modulating temperature controller, with 1 or 2 continuous DC 0...10 V output signals. The RLA162 is used for control and limiting of room temperatures in small HVAC plants.

The following units can be controlled:
- Heating (or cooling) valve actuators
- Air damper actuators
- Step controllers or current valves for electric heating
- Signal converters

Features:
- Low limitation input (supply air temperature)
- Compensation via outside sensor
- Connection for remote setting unit
- P or PI control (selectable)
- Service modes
- Heating and cooling modes available
- Setpoint changeover via external contact or time switch

Data sheet	N3331
Operating voltage	AC 24 V
Frequency	50/60 Hz
Power consumption	2 VA
Analog output, signal	DC 0...10 V
Analog output, current	Max. 1 mA
Analog outputs, number	2
Analog input, signal	LG-Ni1000 DC 0...10 V
Digital input, contact query	DC 3...6 mA DC 6...15 V
Setpoint setting range	8...30 °C
Setpoint readjustment range	0...10 K
Degree of protection	IP30
Dimensions (W x H x D)	97 × 114 × 43 mm

	Stock No.	Product No.
	BPZ:RLA162	**RLA162**

Field devices for RLA162

Product Title	Data sheet	Stock No.	Product No.
Outside sensor LG-Ni1000	N1811	BPZ:QAC22	**QAC22**
Air duct temperature controller, AC 24 V, 2 outputs DC 0...10 V	N3332	BPZ:RLM162	**RLM162**

RLA162.1

Room temperature controller, AC 24 V, 2 outputs DC 0...10 V, operating mode selector

Electronic controller designed for room mounting applications. It is configurable for heating and/or cooling applications with or without separate LG-Ni 1000 sensor.

Application:
Modulating temperature controller, with 1 or 2 continuous DC 0...10 V output signals. The RLA162.1 is used for control and limiting of room temperatures in small HVAC plants.

The following units can be controlled:
- Heating (or cooling) valve actuators
- Air damper actuators
- Step controllers or current valves for electric heating
- Signal converters

Features:
- Compensation via active outside sensor
- P or PI control (selectable)
- Service modes
- Heating and cooling modes available
- Setpoint changeover via external contact or time switch
- Operating mode selector
- External temperature sensor input (LG-Ni 1000)

Data sheet	N3336
Operating voltage	AC 24 V
Frequency	50/60 Hz
Power consumption	2 VA
Analog output, signal	DC 0...10 V
Analog output, current	Max. 1 mA
Analog outputs, number	2
Analog input, signal	LG-Ni1000 DC 0...10 V
Digital input, contact query	DC 3...6 mA DC 6...15 V
Relay outputs	N.O. contact, potential-free
Relay output, switching voltage	AC 24...230 V
Relay output, switching current	2 A
Setpoint setting range	8...30 °C
Setpoint readjustment range	0...10 K
Degree of protection	IP30
Dimensions (W x H x D)	97 × 114 × 43 mm

Stock No.	Product No.
BPZ:RLA162.1	**RLA162.1**

Field devices for RLA162.1

Product Title	Data sheet	Stock No.	Product No.
Outside / room temperature sensor DC 0..10V	N1814	BPZ:QAC3161	**QAC3161**
Cable temperature sensor PVC 2 m, LG-Ni1000	N1831	BPZ:QAP22	**QAP22**

Universal controllers

RLU..

- Tested, predefined applications
- Flexible configuration
- Suited for the controlled variables temperature, relative / absolute humidity, pressure / differential pressure, air flow rate, indoor air quality, etc.
- Autonomous sequence controllers with P, PI or PID mode
- Integrated operation
- No commissioning tool required (optional)

Data sheet	N3101
Operating voltage	AC 24 V
Frequency	50/60 Hz
Digital inputs	Potential-free input signal
Digital input, contact query	5 mA DC 15 V
Universal input, signal	0...1000 Ohm 1000...1175 Ohm 2 x LG-Ni1000 DC 0...10 V Potential-free digital status contact LG-Ni1000 Pt1000 T1 (PTC)
Analog output, signal	DC 0...10 V
Analog output, current	Max. 1 mA
Relay outputs	Potential-free switching contact
Relay output, switching voltage	AC 19...265 V
Relay output, switching current	4 (3) A
Degree of protection	IP20

Range overview RLU..

Digital inputs, number	Universal inputs, number	Analog outputs, number	Relay outputs, number	Control loops, number	Stock No.	Product No.
1	4	0	2	1	BPZ:RLU202	**RLU202**
1	4	2	0	1	BPZ:RLU220	**RLU220**
1	4	2	2	2	BPZ:RLU222	**RLU222**
2	5	3	2	2	BPZ:RLU232	**RLU232**
2	5	3	6	2	BPZ:RLU236	**RLU236**

Accessories for RLU..

Product Title	Data sheet	Stock No.	Product No.
Front panel mounting frame	N3101	BPZ:ARG62.201	**ARG62.201**

Application examples Synco™ 200

These are only a few examples of many applications that can be done with the with Synco™200 controllers: RLU..
More Synco™200 applications are described in "HIT" (the HVAC project engineering tool with a library of over 300 pre-configured HVAC-applications) and in the RLU.. data sheet..

RLU222

ADC002 LU2 HQ

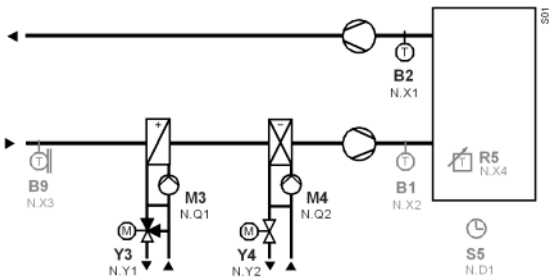

Extract air (room) temperature control

- Extract air (room) temperature control via the heating coil valve and cooling coil valve in sequence
- Control of the heating coil and cooling coil pumps
- Operating mode selection Comfort / Protection

RLU232

ADC015 LU3 HQ

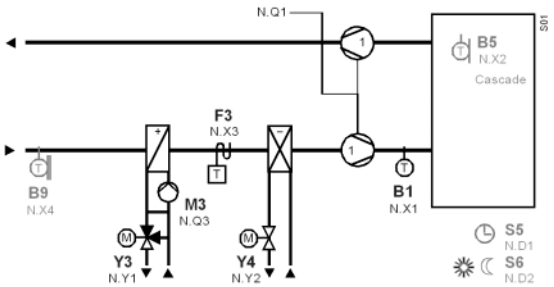

Supply air temperature control with frost protection and release of fan

- Supply air temperature control via the heating coil valve and cooling coil valve in sequence
- Control of the heating coil and cooling coil pumps
- Fan release via relay output
- Frost protection with frost protection monitor
- Operating mode selection Comfort / Protection
- Operating mode selection Comfort/Economy

RLU236

ADC017 LU3 HQ

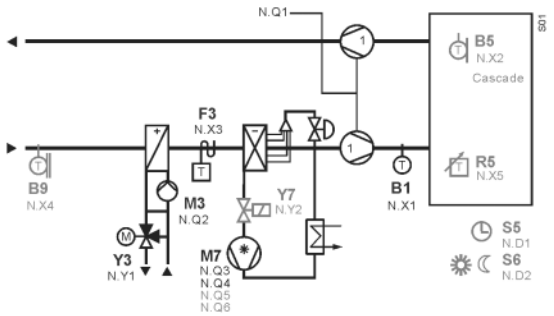

Supply air (room) temperature control with frost protection and release of fan

- Supply air temperature control via the heating coil valve and the direct expansion evaporator in sequence
- Control of the heating coil pump
- Fan release via relay output
- Frost protection with frost protection monitor
- Operating mode selection Comfort / Protection
- Operating mode selection Comfort/Economy

Sensors, setpoint adjusters

Product Title	Data sheet	Stock No.	Product No.
Outside sensor LG-Ni1000	N1811	BPZ:QAC22	**QAC22**
Outside / room temperature sensor DC 0..10V	N1814	BPZ:QAC3161	**QAC3161**
Strap-on temperature sensor LG-Ni1000	N1801	BPZ:QAD22	**QAD22**
Strap-on temperature sensor with cable LG-Ni1000	N1802	BPZ:QAD26.220	**QAD26.220**
Immersion temperature sensor 100 mm LG-Ni1000, with protection pocket	N1781	BPZ:QAE2120.010	**QAE2120.010**
Immersion temperature sensor 150 mm, LG-Ni1000, with protection pocket	N1781	BPZ:QAE2120.015	**QAE2120.015**
Immersion temperature sensor 100 mm, LG-Ni1000, without protection pocket	N1781	BPZ:QAE2121.010	**QAE2121.010**
Immersion temperature sensor 100 mm DC 0...10 V	N1782	BPZ:QAE2164.010	**QAE2164.010**
Immersion temperature sensor 150 mm DC 0...10 V	N1782	BPZ:QAE2164.015	**QAE2164.015**
Immersion temperature sensur Ø 4 mm with cable and fitting	N1790	BPZ:QAE26.9..	**QAE26.9..**
Duct temperature sensor 400 mm, Pt1000	N1761	BPZ:QAM2112.040	**QAM2112.040**
Duct temperature sensor 400 mm, LG-Ni1000	N1761	BPZ:QAM2120.040	**QAM2120.040**
Duct temperature sensor 2000 mm, LG-Ni1000	N1761	BPZ:QAM2120.200	**QAM2120.200**
Duct temperature sensor 6000 mm, LG-Ni1000	N1761	BPZ:QAM2120.600	**QAM2120.600**
Frost sensor, modulating, capillary tube 2000 mm	N1821	BPZ:QAF63.2	**QAF63.2**
Frost sensor, modulating, capillary tube 6000 mm	N1821	BPZ:QAF63.6	**QAF63.6**
Cable temperature sensor for high-temperature applications (180°C)	N1833	BPZ:QAP21.2	**QAP21.2**
Cable temperature sensor silicone 1.5 m, LG-Ni1000	N1831	BPZ:QAP21.3	**QAP21.3**
Cable temperature sensor PVC 2 m, LG-Ni1000	N1831	BPZ:QAP22	**QAP22**
Window pane temperature sensor	N1830	BPZ:QAT22	**QAT22**
Solar sensor	N1943	BPZ:QLS60	**QLS60**
Differential pressure sensor for liquids and gases	N1923	BPZ:QBE61.3-DP..	**QBE61.3-DP..**
Differential pressure sensors for liquids and gase (DC 0...10 V)	N1920	BPZ:QBE63-DP..	**QBE63-DP..**
Differential pressure sensor for liquids and gases (DC 0...10 V) 0...400 kPa	N1921	BPZ:QBE64-DP4	**QBE64-DP4**
Pressure sensor for refrigerants (0...10 V)	N1907	BPZ:QBE2001-P..U	**QBE2001-P..U**
Pressure sensor for liquids and gases (0...10 V)	N1909	BPZ:QBE2002-P..	**QBE2002-P..**
Air duct differential pressure sensor, DC 0...10 V	N1916	BPZ:QBM65..	**QBM65..**
Differential pressure sensor, DC 0...10 V	N1910	BPZ:QBM66..	**QBM66..**

Sensors, setpoint adjusters

Product Title	Data sheet	Stock No.	Product No.
Duct sensor for humidity (DC 0...10 V)	N1864	BPZ:QFM2100	**QFM2100**
Duct sensor for humidity (0...10 V) and temperature (Ni1000)	N1864	BPZ:QFM2120	**QFM2120**
Duct sensor for humidity (DC 0...10 V) and temperature (DC 0...10 V)	N1864	BPZ:QFM2160	**QFM2160**
Duct sensor for humidity (DC 0...10 V) for demanding requirements	N1882	BPZ:QFM3100	**QFM3100**
Duct sensor for humidity (DC 0...10 V) and temperature (DC 0...10 V) for demanding requirements	N1882	BPZ:QFM3160	**QFM3160**
Duct sensor for humidity (0...10 V) and temperature (0...10 V) with calibration certificate	N1883	BPZ:QFM4160	**QFM4160**
Duct air quality sensor CO_2/ temperature / rel. Humidity / VOC	N1962	BPZ:QPM21..	**QPM..**
Setpoint adjuster, passive, scale 0...50 °C (exchangeable)	N1991	BPZ:BSG21.1	**BSG21.1**
Setpoint adjuster, passive, temperature ranges: -20...20 °C; 20...60 °C; -3...3 K	N1991	BPZ:BSG21.5	**BSG21.5**
Active setpoint adjuster 0...100 %, for flush panel mounting	N1992	BPZ:BSG61	**BSG61**
Flue gas temperature sensor Pt1000	N1846	BPZ:FGT-PT1000	**FGT-PT1000**
Duct sensor for air velocity	N1932	BPZ:QVM62.1	**QVM62.1**

Monitors

Product Title	Data sheet	Stock No.	Product No.
Frost monitor, air side, 2-point	N1283	BPZ:QAF64..	**QAF64..**
Frost monitor, 2-point	N1284	BPZ:QAF81..	**QAF81..**
Room hygrostat, setpoint setting range 30...90 % r.h., setpoint adjuster inside device	N1518	BPZ:QFA1000	**QFA1000**
Room hygrostat, setpoint setting range 30...90 % r.h., external setpoint adjustment	N1518	BPZ:QFA1001	**QFA1001**
Duct hygrostat, setpoint setting range 15...95 % r.h.	N1514	BPZ:QFM81.2	**QFM81.2**
Room hygrostat, setpoint setting range 15...95 % r.h., setpoint adjuster inside device	N1514	BPZ:QFM81.21	**QFM81.21**
Condensation monitor	N1542	BPZ:QXA2000	**QXA2000**
Differential pressure monitor	N1552	BPZ:QBM81..	**QBM81..**
Changeover thermostat, changeover, 30 °C / 19 °C, IP54	N1295	BPZ:RYT182	**RYT182**

Room units

Product Title	Data sheet	Stock No.	Product No.
Room temperature sensor LG-Ni1000	N1721	BPZ:QAA24	**QAA24**
Front module with passiv temperature measurement, LG-Ni1000	N1408	S55720-S133	**AQR2531ANW**
Front module with passiv temperature measurement, Pt1000	N1408	S55720-S134	**AQR2531BNW**
Room unit with room temperature sensor and setpoint adjuster	N1721	BPZ:QAA25	**QAA25**
Room unit with room temperature sensor and setpoint readjuster -3...3 K	N1721	BPZ:QAA27	**QAA27**
Room temperature sensor LG-Ni1000 for mounting on recessed conduit boxes	N1722	BPZ:QAA64	**QAA64**
Room sensor for humidity (DC 0...10 V)	N1857	BPZ:QFA2000	**QFA2000**
Room sensor for humidity (DC 0...10 V) and temperature (LG-Ni1000)	N1857	BPZ:QFA2020	**QFA2020**
Room sensor for humidity (DC 0...10 V) and temperature (DC 0...10 V)	N1857	BPZ:QFA2060	**QFA2060**
Room sensor for humidity (DC 0...10 V) for demanding requirements	N1858	BPZ:QFA3100	**QFA3100**
Room sensor for humidity (DC 0...10 V) and temperature (DC 0...10 V) for demanding requirements	N1858	BPZ:QFA3160	**QFA3160**
Room sensor for humidity (DC 0..10V) and temperature (DC 0..10V) with calibration certificate	N1859	BPZ:QFA4160	**QFA4160**
Indoor air quality controller with integrated VOC sensor for mixed gas	N1571	BPZ:QPA84	**QPA84**
Room air quality sensor CO_2 / temperature / rel. Humidity / VOC	N1961	BPZ:QPA20..	**QPA..**

Step switches, signal converters, transformers and display

Product Title	Data sheet	Stock No.	Product No.
Digital time switch, 1-channel, with 7-day program	N5243	BPZ:SEH62.1	**SEH62.1**
Variable speed drive	N5192	BPZ:SED2..	**SED2..**
Transformers	N5536	BPZ:SEM62..	**SEM62..**
Current valve	N4937	BPZ:SEA45.1	**SEA45.1**
Signal converter DC 0...10 V or DC 0 / 10 V in AC 0 / 24 V	N5102	BPZ:SEM61.4	**SEM61.4**
Signal converter with preprogrammed applications	N5146	BPZ:SEZ220	**SEZ220**
Universal digital indicator	N5312	BPZ:BAU200	**BAU200**

Service tool

Product Title	Data sheet	Stock No.	Product No.
Service tool for KNX / LPB	N5655	BPZ:OCI700.1	**OCI700.1**

NEW PRODUCT

RWD Universal..

Universal controller for HVAC systems

Universal controller with P or PI action for heating, ventilation and air conditioning.

Auxiliary functions
- PI limiter function (absolute and relative limit)
- Remote setpoint
- Setpoint compensation
- Winter/summer mode changeover (analogue or digital input)
- Cascade control
- Maximum priority for cooling / dehumidifying

Frequency	50/60 Hz
Digital inputs	Potential-free input signal
Digital input, contact query	DC 15 mA DC 15 V
Digital inputs, number	1
Universal inputs, number	2
Universal input, signal	LG-Ni1000 DC 0...10 V Pt1000
Degree of protection	IP20

Range overview RWD..

Operating voltage [V]	Analog outputs, number	Relay outputs, number	Control loops, number	Data sheet	Stock No.	Product No.
AC 230		2	1	N3341	BPZ:RWD32	**RWD32**
AC 24		2	1	N3341	BPZ:RWD82	**RWD82**
AC 24	2		1	N3342	BPZ:RWD62	**RWD62**
AC 24	1	1	1	N3343	BPZ:RWD68	**RWD68**

Accessories for RWD..

Product Title	Data sheet	Stock No.	Product No.
Protective small enclosure for wall mounting, not applicable for RWD32		BPZ:ARG62.21	**ARG62.21**
Protective big enclosure for wall mounting		BPZ:ARG62.22	**ARG62.22**
Transformers	N5536	BPZ:SEM62..	**SEM62..**
Touch Panel	N3974	S55620-H100	QAX160
Modbus interface for RWD	N3099	S55370-C120	**SEZ50MB**
Remote I/O expansion module	140-1138	S55664-J111	PPM-1U32.MPR

Field devices for RWD..

Product Title	Data sheet	Stock No.	Product No.
Room temperature sensor LG-Ni1000	N1721	BPZ:QAA24	**QAA24**
Front module with passiv temperature measurement, LG-Ni1000	N1408	S55720-S133	AQR2531ANW
Outside sensor LG-Ni1000	N1811	BPZ:QAC22	**QAC22**
Duct temperature sensor 400 mm, LG-Ni1000	N1761	BPZ:QAM2120.040	**QAM2120.040**
Setpoint adjuster, passive, scale 0...50 °C (exchangeable)	N1991	BPZ:BSG21.1	**BSG21.1**

NEW PRODUCT

Application examples RWD..

These are only a few examples of many applications that can be done with the with controllers RWD..
More applications are described in "HIT" (the HVAC project engineering tool with a library of over 300 pre-configured HVAC-applications) and in the RWD.. data sheet.

Return air temperature control — RWD62

ADA002 WC6 HQ a

- Room temperature control by modulating the heater battery valve
- Frost protection with frost protection thermostat (independent of controller) when tripped, heater battery valve fully opens, dampers close, fan switches off

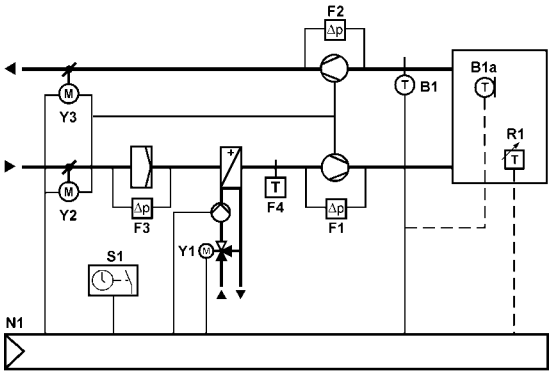

Return air temperature control — RWD62

ADC003 WC6 HQ a

- Return air temperature control by modulating the heater battery valve and the cooler battery valve in sequence
- Frost protection with frost protection thermostat (independent of controller): when tripped, heater battery valve fully opens, supply and extract fans switch off, outside air and extract air dampers close
- Use of an external time switch to provide day/night settings
- Summer compensation

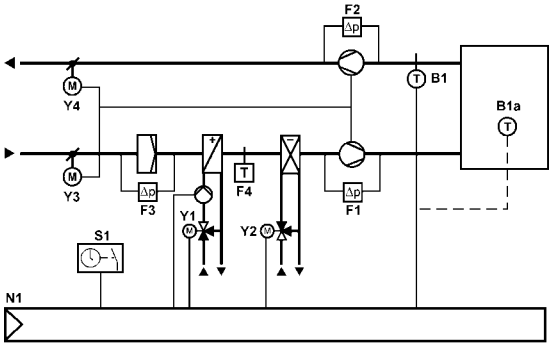

RWD Heat Pump..

Temperature controllers for heat pump, heating and cooling applications

- Multistage heating and cooling temperature controllers
- Programmable controllers with standard pre-configured applications
- Programmable via push buttons or a software tool
- Suitable for 1, 2 or 3 compressor units
- Heat/cool or reversing valve output configuration
- Adjustable compressor time delays
- Selectable alarm inputs
- Economizer "Open Air" control for improved comfort and energy savings
- LED indicators for heat/cool

Auxiliary functions
The second analog input is used for the following functions:
- Standby (on/off)
- Remote setpoint adjustement
- Alarm
- Filter alarm
- Sepoint compensation
- Sensor averaging
- Winter/summer setpoint changeover (analog or digital input)
- Sensor select
- Active sensor

Digital functions
- Day/night changeover
- Standby
- Alarm
- Filter alarm

Frequency	50/60 Hz
Relay outputs, number	4
Relay outputs	potential-free switching contact AC 24...230 V 4(3) A
Mounting location	Panel mounting
Degree of protection	IP20
Dimensions (W x H x D)	130 x 106 x 56.5 mm

Range overview Heat Pump controller RWD..

Operating voltage	Universal inputs, number	Digital inputs, number	Relay outputs, number	Data sheet	Stock No.	Product No.
AC 230	2	1	4	N3346	BPZ:RWD34	**RWD34**
AC 24	2	1	4	N3346	BPZ:RWD44	**RWD44**

Accessories for RWD..

Product Title	Data sheet	Stock No.	Product No.
Protective small enclosure for wall mounting, not applicable for RWD32		BPZ:ARG62.21	**ARG62.21**
Protective big enclosure for wall mounting		BPZ:ARG62.22	**ARG62.22**
Transformers	N5536	BPZ:SEM62..	**SEM62..**
Touch Panel	N3974	S55620-H100	QAX160
Modbus interface for RWD	N3099	S55370-C120	**SEZ50MB**
Remote I/O expansion module	140-1138	S55664-J111	PPM-1U32.MPR

NEW PRODUCT

Universal controller

RMUB..

- Universal controllers with integrated control and supervisory functions
- Tested, predefined applications (refer to Application Catalog)
- Flexible configuration
- Suited for the controlled variables temperature, relative / absolute humidity, pressure / differential, air flow rate, indoor air quality, etc.
- Autonomous sequence controllers with P, PI or PID mode
- Functions can be extended (extension modules)
- Clear-text operation with separate operator unit (plug-in type or detached)
- Integrated KNX bus communication
- No commissioning tool required

Extension modules complement the Synco 700 universal controllers and offer extra functions. The extension modules are attached to the controller. Full operation from commissioning to enduser operation via the operator unit.

Available extension modules:
- 1 universal module RMZ785
- 2 universal modules RMZ787
- 2 universal modules RMZ788

Total maximal 4 extension modules per RMU7..B can be connected.

Available operator units:
- Plug-in type operator unit RMZ790
- Detached operator unit RMZ791
- Bus operating unit RMZ792

Data sheet	N3150
Operating voltage	AC 24 V
Frequency	50/60 Hz
Power consumption	12 VA
Universal input, signal	LG-Ni1000 2 x LG-Ni1000 T1 (PTC) Pt1000 0...1000 Ohm 1000...1175 Ohm DC 0...10 V Digital pulse contact Potential-free digital status contact
Analog output, signal	DC 0...10 V
Analog output, current	Max. 1 mA
Relay outputs	Potential-free switching contact
Relay output, switching voltage	AC 19...250 V
Relay output, switching current	4 (3) A
Communication	KNX (KNX TP1)
Dimensions (W x H x D)	173 x 90 x 80 mm

Range overview RMU7..B..

Universal inputs, number	Analog outputs, number	Relay outputs, number	Control loops, number	Loaded languages	Stock No.	Product No.
6	2	2	1	de, fr, it, es	BPZ:RMU710B-1	**RMU710B-1**
6	2	2	1	de, en, fr, nl	BPZ:RMU710B-2	**RMU710B-2**
6	2	2	1	da, fi, sv, no	BPZ:RMU710B-3	**RMU710B-3**
6	2	2	1	cs, hu, pl, sk, ru, bg	BPZ:RMU710B-4	**RMU710B-4**
6	2	2	1	sr, hr, sl, ro, el, tr	BPZ:RMU710B-5	**RMU710B-5**
6	2	2	1	zh	S55370-C159	**RMU710B-6**
8	3	4	2	de, fr, it, es	BPZ:RMU720B-1	**RMU720B-1**
8	3	4	2	de, en, fr, nl	BPZ:RMU720B-2	**RMU720B-2**
8	3	4	2	da, fi, sv, no	BPZ:RMU720B-3	**RMU720B-3**
8	3	4	2	cs, hu, pl, sk, ru, bg	BPZ:RMU720B-4	**RMU720B-4**
8	3	4	2	sr, hr, sl, ro, el, tr	BPZ:RMU720B-5	**RMU720B-5**
8	3	4	2	zh	S55370-C160	**RMU720B-6**
8	4	6	3	de, fr, it, es	BPZ:RMU730B-1	**RMU730B-1**
8	4	6	3	de, en, fr, nl	BPZ:RMU730B-2	**RMU730B-2**
8	4	6	3	da, fi, sv, no	BPZ:RMU730B-3	**RMU730B-3**
8	4	6	3	cs, hu, pl, sk, ru, bg	BPZ:RMU730B-4	**RMU730B-4**
8	4	6	3	sr, hr, sl, ro, el, tr	BPZ:RMU730B-5	**RMU730B-5**
8	4	6	3	zh	S55370-C161	**RMU730B-6**

Application examples RMU710B..

These are only a few examples of many applications that can be done with the with Synco™700 controllers: RMU710B..
More Synco™700 applications are described in “HIT” (the HVAC project engineering tool with a library of over 300 pre-configured HVAC-applications) and in the RMU710B.. data sheet.

The evaluation of the energy efficiency classification is based on EN15232:2007. For a determination of the energy efficiency classification of the application, please use the "HIT Tool".
Further details are available in the manual "Building automation - impact on energy efficiency" in our HIT Online.
www.siemens.com/hit

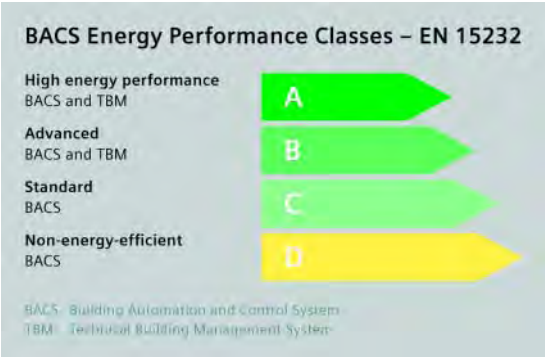

Room-supply air temperature cascade control

RMU710B..

ADA001 U1B HQ

- 7-day time switch with holiday / special day program
- Control of a 2-speed fan
- Control of the supply air temperature via the heating coil valve
- Frost protection with frost protection monitor
- Supervision of the supply and extract air fans with differential pressure sensors
- Supervision of the supply air filter with a differential pressure sensor

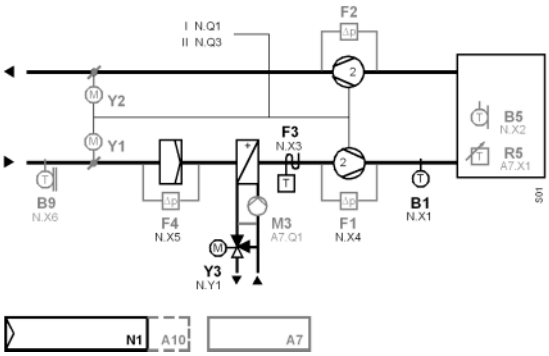

Room-supply air temperature cascade control

RMU710B..

ADB001 U1B HQ

- 7-day time switch with holiday / special day program
- Control of a 2-speed fan
- Control of the supply air temperature via the cooling coil valve
- Supervision of the supply and extract air fans with differential pressure sensors
- Supervision of the supply air filter with a differential pressure sensor

The indicated energy efficiency classification can be attained only if the following functions are implemented:

- Air flow control at the room level on demand (Air quality sensor must be integrated as an additional feature)
- Air flow control at the air handler level (Automatic fan step switching corresponds to Efficiency Class B / Step 2 must be switched based on air quality)
- Free mechanical cooling (Outside air temperature and room temperature sensor required)
- Supply temperature control, variable set point with load dependant compensation
- Humidity control (Not applicable, as no humidity control)

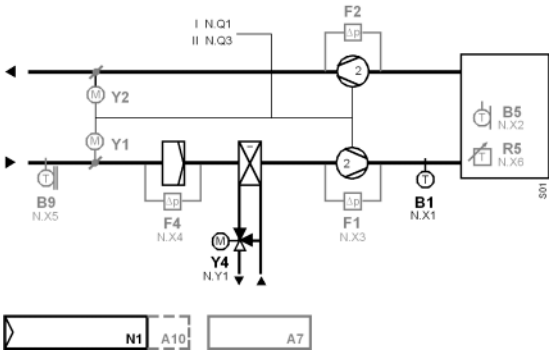

To fulfill the classification, the plant must be equipped with all indicated functions.

RMU710B..

ADC001 U1B HQ

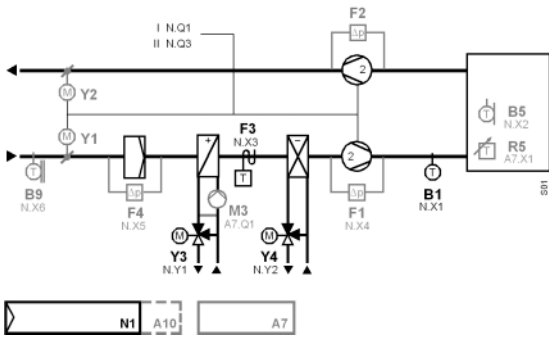

Room-supply air temperature cascade control

- 7-day time switch with holiday / special day program
- Control of a 2-speed fan
- Control of the supply air temperature via the heating coil valve and the cooling coil valve in sequence
- Frost protection with frost protection monitor
- Supervision of the supply and extract air fans with differential pressure sensors
- Supervision of the supply air filter with a differential pressure sensor

RMU710B..

AEA001 U1B DE

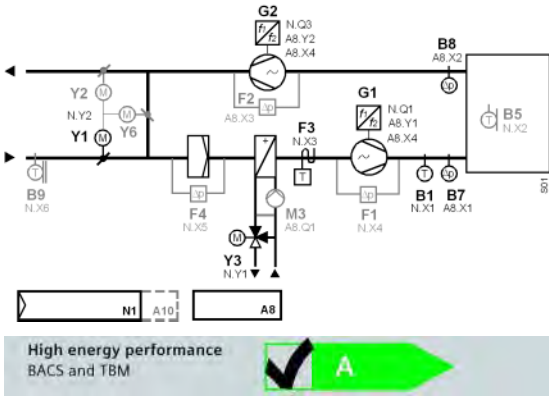

To fulfill the classification, the plant must be equipped with all indicated functions.

Room-supply air temperature cascade control

- 7-day time switch with holiday / special day program
- Control of a variable-speed fan
- Control of the supply air temperature via the mixed air dampers and the heating coil valve in sequence
- Frost protection with frost protection monitor
- Supervision of the supply and extract air fans with differential pressure sensors
- Supervision of the supply air filter with a differential pressure sensor

The indicated energy efficiency classification can be attained only if the following functions are implemented:

- Air flow control at the room level, demand control
- Air flow control at the air handler level, automatic flow or pressure control with or without pressure reset
- With heat exchanger overheating control
- Free mechanical cooling (Not applicable due to lack of cooling sequence)
- Humidity control (Not applicable, as no humidity control)
- Home automation / building automation and control system and technical home/building management required satisfying Efficiency Class A

Room-supply air temperature cascade control

RMU710B..

ADAE01 U1B HQ

- 7-day time switch with holiday / special day program
- Control of a 2-speed fan
- Control of the supply air temperature via the heat recovery system and the heating coil valve in sequence
- Frost protection with frost protection monitor
- Supervision of the supply and extract air fans with differential pressure sensors
- Supervision of the supply and extract air filters with differential pressure sensors

The indicated energy efficiency classification can be attained only if the following functions are implemented:

- Air flow control at the room level, demand control (Air quality sensor must be integrated as an additional feature)
- Air flow control at the air handler level, automatic flow or pressure control with or without pressure reset (Automatic fan step switching corresponds to Efficiency Class B / Step 2 must be switched based on air quality)
- Heat exchanger defrost control (Exhaust air temperature sensor required)
- Heat exchanger overheating control
- Supply Temperature control (Variable set point with load dependant compensation)

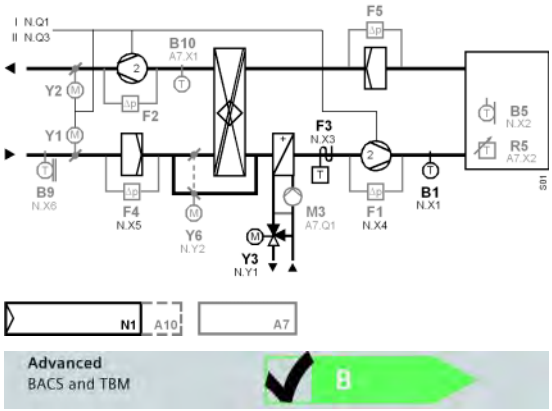

To fulfill the classification, the plant must be equipped with all indicated functions.

Application examples RMU720B..

These are only a few examples of many applications that can be done with the with Synco™700 controllers: RMU720B..
More Synco™700 applications are described in "HIT" (the HVAC project engineering tool with a library of over 300 pre-configured HVAC-applications) and in the RMU720B.. data sheet.

The evaluation of the energy efficiency classification is based on EN15232:2007. For a determination of the energy efficiency classification of the application, please use the "HIT Tool".
Further details are available in the manual "Building automation - impact on energy efficiency" in our HIT Online.
www.siemens.com/hit

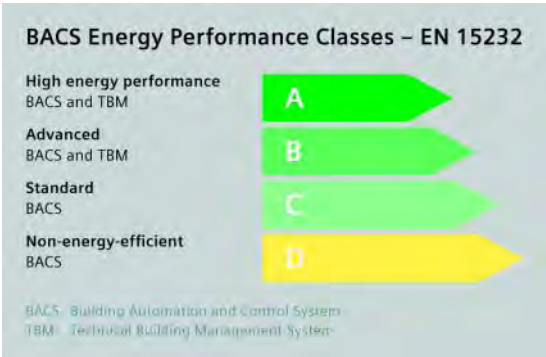

RMU720B..

AEC001 U2B DE

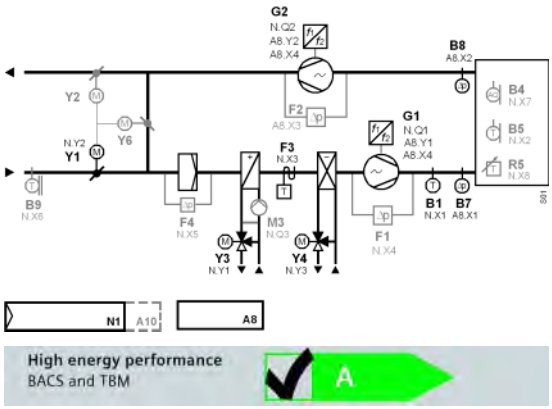

To fulfill the classification, the plant must be equipped with all indicated functions.

Room-supply air temperature cascade control

- 7-day time switch with holiday / special day program
- Control of a variable-speed fan
- Control of the supply air temperature via the mixed air dampers, the heating coil valve and cooling coil valve in sequence
- Frost protection with frost protection monitor
- Supervision of the supply and extract air fans with differential pressure sensors
- Supervision of the supply air filter with a differential pressure sensor
- Home automation / building automation and control system and technical home/building management required satisfying Efficiency Class A

The indicated energy efficiency classification can be attained only if the following functions are implemented:

- Air flow control at the room level, demand control
- Air flow control at the air handler level, automatic flow or pressure control with or without pressure reset
- With heat exchanger overheating control
- Free mechanical cooling (Outside air temperature and room temperature sensor required)
- Supply temperature control, variable set point with load dependant compensation

RMU720B..

ADCE01 U2B HQ

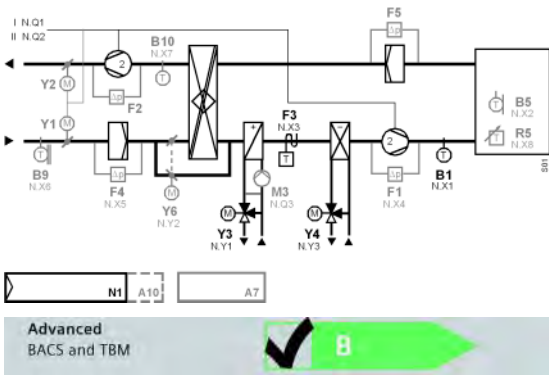

To fulfill the classification, the plant must be equipped with all indicated functions.

Room-supply air temperature cascade control

- 7-day time switch with holiday / special day program
- Control of a 2-speed fan
- Control of the supply air temperature via the heating coil valve and the cooling coil valve in sequence
- Frost protection with the frost protection monitor
- Supervision of the supply and extract air fans with differential pressure sensors
- Supervision of the supply and extract air filter with a differential pressure sensor

The indicated energy efficiency classification can be attained only if the following functions are implemented:

- Air flow control at the room level, demand control (Air quality sensor must be integrated as an additional feature)
- Air flow control at the air handler level, automatic flow or pressure control with or without pressure reset (Automatic fan step switching corresponds to Efficiency Class B / Step 2 must be switched based on air quality)
- Heat exchanger defrost control (Exhaust air temperature sensor required)
- With heat exchanger overheating control
- Free mechanical cooling (Outside air temperature and room temperature sensor required)
- Supply Temperature control, variable set point with load dependant compensation

Room-supply air temperature cascade and humidity control

RMU720B..

ADFB01 U2B HQ

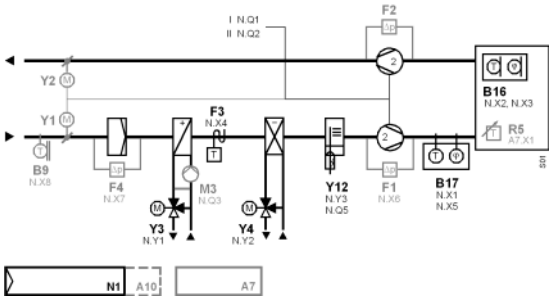

- 7-day time switch with holiday / special day program
- Control of a 2-speed fan
- Control of the supply air temperature via the heating coil valve and cooling coil valve in sequence
- Control of room humidity via the air humidifier (on command and modulating positioning signal)
- Frost protection with frost protection monitor
- Supervision of the supply and extract air fans with differential pressure sensors
- Supervision of the supply air filter with differential pressure sensors
- Limitation of supply air humidity

Room-supply air temperature cascade and humidity control

RMU720B..

AEDB01 U2B HQ

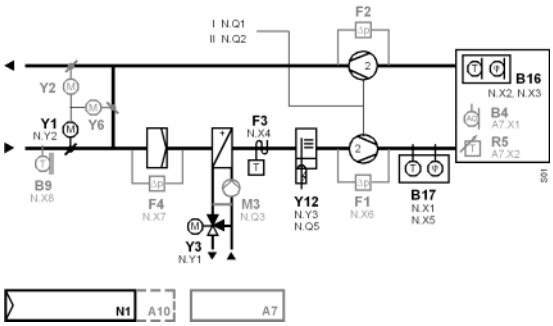

To fulfill the classification, the plant must be equipped with all indicated functions.

- 7-day time switch with holiday / special day program
- Control of a 2-speed fan
- Control of the supply air temperature via the mixed air dampers and the heating coil valve in sequence
- Control of room humidity via the air humidifier (on command and modulating positioning signal)
- Frost protection with frost protection monitor
- Supervision of the supply and extract air fans with differential pressure sensors
- Supervision of the supply air filter with a differential pressure sensor
- Limitation of supply air humidity

The indicated energy efficiency classification can be attained only if the following functions are implemented:

- Air flow control at the room level, demand control (Air quality sensor required)
- Air flow control at the air handler level, automatic flow or pressure control with or without pressure reset (Automatic fan step switching corresponds to Efficiency Class B / Step 2 must be switched based on air quality)
- With heat exchanger overheating control
- Supply Temperature control, variable set point with load dependant compensation
- Room or exhaust air humidity control

RMU720B..

ADDP01 U2B HQ

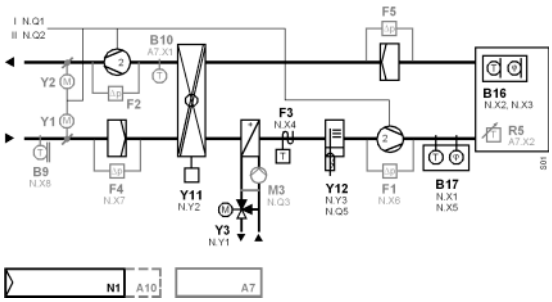

To fulfill the classification, the plant must be equipped with all indicated functions.

Room-supply air temperature cascade and humidity control

- 7-day time switch with holiday / special day program
- Control of a 2-speed fan
- Control of the supply air temperature via the heat recovery system and the heating coil valve in sequence
- Control of room humidity via the air humidifier (on command and modulating positioning signal)
- Frost protection with frost protection monitor
- Supervision of the supply and extract air fans with differential pressure sensors
- Supervision of the supply and extract air filters with differential pressure sensors
- Limitation of supply air humidity

The indicated energy efficiency classification can be attained only if the following functions are implemented:

- Air flow control at the room level, demand control (Air quality sensor must be integrated as an additional feature)
- Air flow control at the air handler level, automatic flow or pressure control with or without pressure reset (Automatic fan step switching corresponds to Efficiency Class B / Step 2 must be switched based on air quality)
- Heat exchanger defrost control (Exhaust air temperature sensor required)
- With heat exchanger overheating control
- Supply Temperature control, variable set point with load dependant compensation
- Room or exhaust air humidity control

Application examples RMU730B..

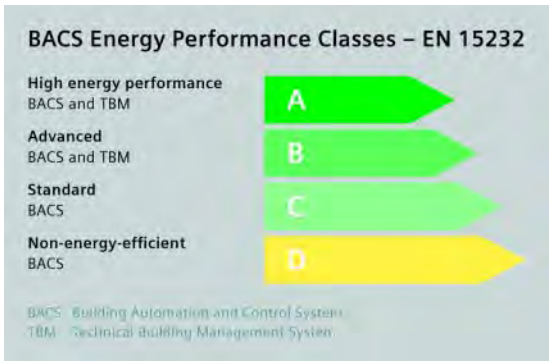

These are only a few examples of many applications that can be done with the with Synco™700 controllers: RMU730B..
More Synco™700 applications are described in “HIT” (the HVAC project engineering tool with a library of over 300 pre-configured HVAC-applications) and in the RMU730B.. data sheet.

The evaluation of the energy efficiency classification is based on EN15232:2007.
For a determination of the energy efficiency classification of the application, please use the "HIT Tool".
Further details are available in the manual "Building automation - impact on energy efficiency" in our HIT Online.
www.siemens.com/hit

Room-supply air temperature cascade and humidity control

RMU730B..

AEFB01 U3B HQ

- 7-day time switch with holiday / special day program
- Control of a 2-speed fan
- Control of the supply air temperature via the mixed air dampers, the heating coil valve and cooling coil valve in sequence
- Control of room humidity via the air humidifier (on command and modulating positioning signal)
- Frost protection with frost protection monitor
- Supervision of the supply and extract air fans with differential pressure sensors
- Supervision of the supply air filter with a differential pressure sensor
- Limitation of supply air humidity

The indicated energy efficiency classification can be attained only if the following functions are implemented:

- Air flow control at the room level, demand control (Air quality sensor required)
- Air flow control at the air handler level, automatic flow or pressure control with or without pressure reset (Automatic fan step switching corresponds to Efficiency Class B / Step 2 must be switched based on air quality)
- With heat exchanger overheating control
- Free mechanical cooling (Outside air temperature and room temperature sensor required)
- Supply Temperature control, variable set point with load dependant compensation
- Room or exhaust air humidity control

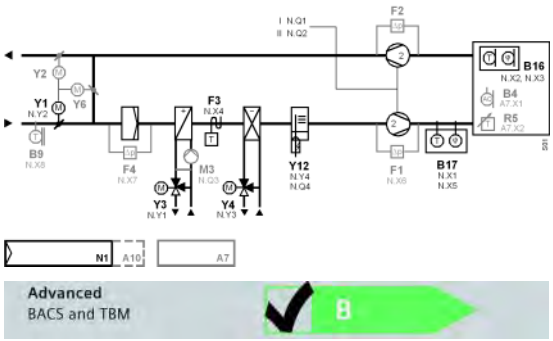

To fulfill the classification, the plant must be equipped with all indicated functions.

Room-supply air temperature cascade and humidity control

RMU730B..

ADFP01 U3B HQ

- 7-day time switch with holiday / special day program
- Control of a 2-speed fan
- Control of the supply air temperature via the heat recovery system, the heating coil valve and cooling coil valve in sequence
- Control of room humidity via the air humidifier (on command and modulating positioning signal)
- Frost protection with frost protection monitor
- Supervision of the supply and extract air fans with differential pressure sensors
- Supervision of the supply and extract air filters with differential pressure sensors
- Limitation of the supply air humidity

The indicated energy efficiency classification can be attained only if the following functions are implemented:

- Air flow control at the room level, demand control (Air quality sensor must be integrated as an additional feature)
- Air flow control at the air handler level, automatic flow or pressure control with or without pressure reset (Automatic fan step switching corresponds to Efficiency Class B / Step 2 must be switched based on air quality)
- Heat exchanger defrost control (Exhaust air temperature sensor required)
- With heat exchanger overheating control
- Free mechanical cooling (Outside air temperature and room temperature sensor required)
- Supply Temperature control, variable set point with load dependant compensation
- Room or exhaust air humidity control

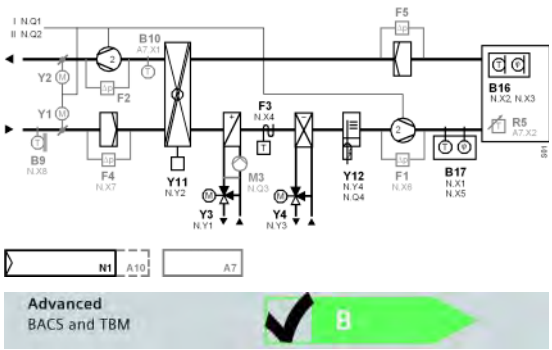

To fulfill the classification, the plant must be equipped with all indicated functions.

RMU730B..

ADZA01 U3B HQ

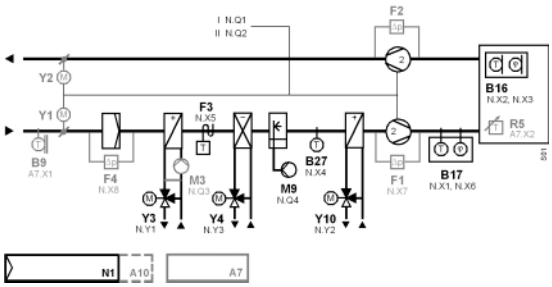

Room-supply air temperature cascade and humidity control

- 7-day time switch with holiday / special day program
- Control of a 2-speed fan
- Room (extract air)-supply air temperature cascade control with minimum and maximum limitation of the supply air temperature
- Control of the supply air temperature via the reheater valve and the cooling coil valve in sequence
- Control of the dewpoint temperature via the preheater valve and the cooling coil valve in sequence
- Control of room humidification via the air humidifier (on command)
- Control of room dehumidification by changing the outputs of dewpoint temperature control
- Frost protection with frost protection monitor
- Supervision of the supply and extract air fans with differential pressure sensors
- Supervision of the supply air filter with a differential pressure sensor
- Limitation of supply air humidity by shutting down the preheater and by switching off the air humidifier in sequence

RMU730B..

AEZH01 U3B DE

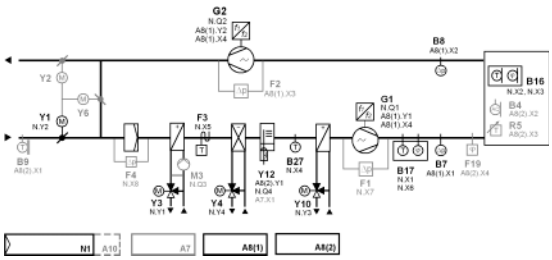

To fulfill the classification, the plant must be equipped with all indicated functions.

Room-supply air temperature cascade and humidity control

- 7-day time switch with holiday / special day program
- Control of variable speed fan
- Room (extract air)-supply air temperature cascade control with minimum and maximum limitation of the supply air temperature
- Control of the supply air temperature via the mixed air dampers, the reheater valve and cooling coil valve in sequence
- Control of the dewpoint temperature via the mixed air dampers, the preheater valve and cooling coil valve in sequence
- Control of room humidification via the air humidifier (on command)
- Control of room dehumidification by changing the outputs of dewpoint temperature control
- Frost protection with frost protection monitor
- Supervision of the supply and extract air fans with differential pressure sensors
- Supervision of the supply air filter with a differential pressure sensor
- Limitation of supply air humidity

The indicated energy efficiency classification can be attained only if the following functions are implemented:

- Air flow control at the room level, demand control
- Air flow control at the air handler level, automatic flow or pressure control with or without pressure reset
- With heat exchanger overheating control
- Free mechanical cooling
- Supply Temperature control, variable set point with load dependant compensation
- Room or exhaust air humidity control
- Home automation / building automation and control system and technical home/building management required satisfying Efficiency Class A

Room-supply air temperature cascade and humidity control

RMU730B..

AEZH02 U3B HQ

- 7-day time switch with holiday / special day program
- Control of a 2-speed fan
- Room (extract air)-supply air temperature cascade control with minimum and maximum limitation of the supply air temperature
- Control of the supply air temperature via the mixed air dampers, the reheater valve and the cooling coil valve in sequence
- Control of the dewpoint temperature via the mixed air dampers and the pre-heater valve in sequence
- Control of room humidification via the air humidifier (on command) and the cooling coil valve in sequence
- Frost protection with frost protection monitor
- Supervision of the supply and extract air fans with differential pressure sensors
- Supervision of the supply air filter with a differential pressure sensor
- Limitation of supply air humidity by switching off the air humidifier in sequence

The indicated energy efficiency classification can be attained only if the following functions are implemented:

- Air flow control at the room level, demand control (Air quality sensor required)
- Air flow control at the air handler level, automatic flow or pressure control with or without pressure reset (Automatic fan step switching corresponds to Efficiency Class B / Step 2 must be switched based on air quality)
- With heat exchanger overheating control
- Free mechanical cooling (Outside air temperature and room temperature sensor required)
- Supply Temperature control, variable set point with load dependant compensation
- With supply air humidity control

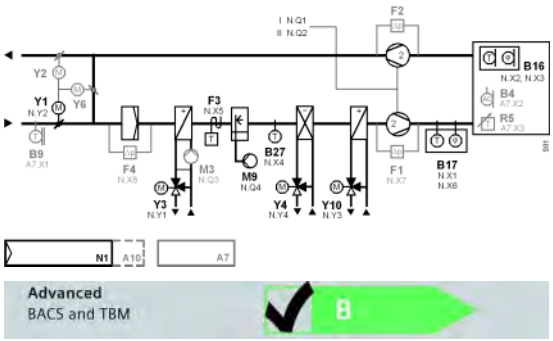

To fulfill the classification, the plant must be equipped with all indicated functions.

RMS705B..

Switching and monitoring device

In connection with the function blocks, the RMS705B complements the range of Synco700 products as a freely configurable unit for
- control and supervisory functions in heating, ventilation and refrigeration plant
- non-standard applications

and, for this reason, offers no predefined standard applications.

The RMS705B is especially suited for the following functions:
- Connection of additional universal alarm inputs
- Adding free inputs for display and supervision
- Event logging (e.g. legionella function)
- Additional time programs (ON / OFF) for basic functions
- Maximum and minimum selection
- Calculation of average
- Calculation of enthalpy, enthalpy differential, absolute humidity, dewpoint and wet bulb temperature
- Logic function blocks for switching on / off depending on different conditions
- Lead / lag control of pumps, fans, motors, chillers, etc., with automatic changeover
- Step switch with linear, binary or flexible functionality
- Autonomous sequence controllers with P, PI or PID mode

Available extension modules:
- 1 universal module RMZ785
- 2 universal modules RMZ787
- 2 universal modules RMZ788

Total maximal 4 extension modules per RMS705B can be connected.

Suitable types of operator units:
- Plug-in operator unit type RMZ790
- Detached operator unit type RMZ791
- Bus operating unit type RMZ792

Data sheet	N3124
Operating voltage	AC 24 V
Frequency	50/60 Hz
Power consumption	12 VA
Universal inputs, number	8
Universal input, signal	LG-Ni1000 2 x LG-Ni1000 T1 (PTC) Pt1000 0...1000 Ohm DC 0...10 V Digital pulse contact Potential-free digital status contact
Analog outputs, number	4
Analog output, signal	DC 0...10 V
Analog output, current	Max. 1 mA
Relay outputs, number	6
Relay outputs	Potential-free switching contact
Relay output, switching voltage	AC 19...250 V
Relay output, switching current	4 (3) A
Communication	KNX (KNX TP1)
Degree of protection	IP20
Dimensions (W x H x D)	173 x 90 x 80 mm

Range overview RMS705B..

Product Title	Data sheet	Stock No.	Product No.
Switching and monitoring device with languages de, fr, it, es, pt	N3124	S55370-C100	**RMS705B-1**
Switching and monitoring device with languages de, fr, nl, en	N3124	S55370-C101	**RMS705B-2**
Switching and monitoring device with languages da, fi, no, sv	N3124	S55370-C102	**RMS705B-3**
Switching and monitoring device with languages pl, cs, hu, ru, sk, bg	N3124	S55370-C103	**RMS705B-4**
Switching and monitoring device with languages el, ro, sl, sr, hr, tr	N3124	S55370-C104	**RMS705B-5**
Switching and monitoring device with language zh	N3124	S55370-C105	**RMS705B-6**

RMZ790

Plug-in type operator unit

- Operator unit plugs into the Synco™ 700 controllers
- For displaying and changing plant data for service staff and enduser
- Clear-text operation
- Can be plugged in and removed during operation
- Power supply via the controller

Data sheet N3111

Stock No.	Product No.
BPZ:RMZ790	**RMZ790**

RMZ791

Detached operator unit with 3 m cable

Like plug-in type operator unit, but:
- Other mounting choices (typically for control panel door or wall mounting)
- Larger display
- Connection via a prefabricated 3 m cable, supplied as standard

Data sheet N3112

Stock No.	Product No.
BPZ:RMZ791	**RMZ791**

RMZ792

Bus operator unit

Communicating operator unit for operating up to 150 controllers, room units and central units from the Synco™ 700 range via KNX bus.
Favorite pages can be freely defined. Designed for fixed installation or mobile use.

Data sheet N3113

Stock No.	Product No.
BPZ:RMZ792	**RMZ792**

QAW740

Room unit with KNX bus

Configurable unit with display of operating mode, timer, temperatures and fault.

With 3 operating elements:
- Knob for setpoint readjustments
- Operating mode button
- Timer button

Data sheet N1633

Setpoint readjustment range	±3 K
Measuring range, temperature	0...50 °C
Degree of protection	IP20
Communication	KNX TP1 EE
Connection cable	2-wire

Stock No.	Product No.
BPZ:QAW740	**QAW740**

Universal modules

RMZ78..

Additional inputs and outputs required by the Synco™ 700 controllers can be provided by these modules. A description of the functions is given with the relevant controller module.

Data sheet	N3146
Voltage supply	Supply from controller module
Power consumption	2 VA
Universal input, signal	0...1000 Ohm 1000...1175 Ohm 2 x LG-Ni1000 DC 0...10 V Potential-free digital status contact LG-Ni1000 Pt1000 T1 (PTC)
Analog output, signal	DC 0...10 V
Analog output, current	Max. 1 mA
Relay outputs	switching contact, potential-free
Relay output, switching voltage	AC 19...265 V
Relay output, switching current	4 (3) A

Range overview RMZ78..

Universal inputs, number	Analog outputs, number	Relay outputs, number	Stock No.	Product No.
8	0	0	BPZ:RMZ785	**RMZ785**
4	0	4	BPZ:RMZ787	**RMZ787**
4	2	2	BPZ:RMZ788	**RMZ788**

Module connector

RMZ780

Module connector for detached mounting of extension modules within the control panel.
Distance for detached mounting: Maximum 10 m.

Data sheet	N3138

Stock No.	Product No.
BPZ:RMZ780	**RMZ780**

Sensors, setpoint adjusters

Product Title	Data sheet	Stock No.	Product No.
Outside sensor LG-Ni1000	N1811	BPZ:QAC22	**QAC22**
Outside / room temperature sensor DC 0..10V	N1814	BPZ:QAC3161	**QAC3161**
Strap-on temperature sensor LG-Ni1000	N1801	BPZ:QAD22	**QAD22**
Strap-on temperature sensor with cable LG-Ni1000	N1802	BPZ:QAD26.220	**QAD26.220**
Immersion temperature sensor 100 mm LG-Ni1000, with protection pocket	N1781	BPZ:QAE2120.010	**QAE2120.010**
Immersion temperature sensor 150 mm, LG-Ni1000, with protection pocket	N1781	BPZ:QAE2120.015	**QAE2120.015**
Immersion temperature sensor 100 mm, LG-Ni1000, without protection pocket	N1781	BPZ:QAE2121.010	**QAE2121.010**
Immersion temperature sensor 150 mm LG-Ni1000, without protection pocket	N1781	BPZ:QAE2121.015	**QAE2121.015**
Immersion temperature sensor 100 mm DC 0...10 V	N1782	BPZ:QAE2164.010	**QAE2164.010**
Immersion temperature sensor 150 mm DC 0...10 V	N1782	BPZ:QAE2164.015	**QAE2164.015**
Immersion temperature sensur Ø 4 mm with cable and fitting	N1790	BPZ:QAE26.9..	**QAE26.9..**
Duct temperature sensor 400 mm, Pt1000	N1761	BPZ:QAM2112.040	**QAM2112.040**
Duct temperature sensor 400 mm, LG-Ni1000	N1761	BPZ:QAM2120.040	**QAM2120.040**
Duct temperature sensor 2000 mm, LG-Ni1000	N1761	BPZ:QAM2120.200	**QAM2120.200**
Duct temperature sensor 6000 mm, LG-Ni1000	N1761	BPZ:QAM2120.600	**QAM2120.600**
Frost sensor, modulating, capillary tube 2000 mm	N1821	BPZ:QAF63.2	**QAF63.2**
Frost sensor, modulating, capillary tube 6000 mm	N1821	BPZ:QAF63.6	**QAF63.6**
Cable temperature sensor for high-temperature applications (180°C)	N1833	BPZ:QAP21.2	**QAP21.2**
Cable temperature sensor silicone 1.5 m, LG-Ni1000	N1831	BPZ:QAP21.3	**QAP21.3**
Cable temperature sensor PVC 2 m, LG-Ni1000	N1831	BPZ:QAP22	**QAP22**
Window pane temperature sensor	N1830	BPZ:QAT22	**QAT22**
Solar sensor	N1943	BPZ:QLS60	**QLS60**
Differential pressure sensor for liquids and gases	N1923	BPZ:QBE61.3-DP..	**QBE61.3-DP..**
Differential pressure sensors for liquids and gase (DC 0...10 V)	N1920	BPZ:QBE63-DP..	**QBE63-DP..**
Differential pressure sensor for liquids and gases (DC 0...10 V) 0...400 kPa	N1921	BPZ:QBE64-DP4	**QBE64-DP4**
Pressure sensor for refrigerants (0...10 V)	N1907	BPZ:QBE2001-P..U	**QBE2001-P..U**
Pressure sensor for liquids and gases (0...10 V)	N1909	BPZ:QBE2002-P..	**QBE2002-P..**

Sensors, setpoint adjusters

Product Title	Data sheet	Stock No.	Product No.
Air duct differential pressure sensor, DC 0...10 V	N1916	BPZ:QBM65..	**QBM65..**
Differential pressure sensor, DC 0...10 V	N1910	BPZ:QBM66..	**QBM66..**
Duct sensor for humidity (DC 0...10 V)	N1864	BPZ:QFM2100	**QFM2100**
Duct sensor for humidity (0...10 V) and temperature (Ni1000)	N1864	BPZ:QFM2120	**QFM2120**
Duct sensor for humidity (DC 0...10 V) and temperature (DC 0...10 V)	N1864	BPZ:QFM2160	**QFM2160**
Duct sensor for humidity (DC 0...10 V) for demanding requirements	N1882	BPZ:QFM3100	**QFM3100**
Duct sensor for humidity (DC 0...10 V) and temperature (DC 0...10 V) for demanding requirements	N1882	BPZ:QFM3160	**QFM3160**
Duct sensor for humidity (0...10 V) and temperature (0...10 V) with calibration certificate	N1883	BPZ:QFM4160	**QFM4160**
Duct air quality sensor CO_2/ temperature / rel. Humidity / VOC	N1962	BPZ:QPM21..	**QPM..**
Setpoint adjuster, passive, scale 0...50 °C (exchangeable)	N1991	BPZ:BSG21.1	**BSG21.1**
Setpoint adjuster, passive, temperature ranges: -20...20 °C; 20...60 °C; -3...3 K	N1991	BPZ:BSG21.5	**BSG21.5**
Active setpoint adjuster 0...100 %, for flush panel mounting	N1992	BPZ:BSG61	**BSG61**
Flue gas temperature sensor Pt1000	N1846	BPZ:FGT-PT1000	**FGT-PT1000**
Duct sensor for air velocity	N1932	BPZ:QVM62.1	**QVM62.1**

Monitors

Product Title	Data sheet	Stock No.	Product No.
Frost monitor, air side, 2-point	N1283	BPZ:QAF64..	**QAF64..**
Frost monitor, 2-point	N1284	BPZ:QAF81..	**QAF81..**
Room hygrostat, setpoint setting range 30...90 % r.h., setpoint adjuster inside device	N1518	BPZ:QFA1000	**QFA1000**
Room hygrostat, setpoint setting range 30...90 % r.h., external setpoint adjustment	N1518	BPZ:QFA1001	**QFA1001**
Duct hygrostat, setpoint setting range 15...95 % r.h.	N1514	BPZ:QFM81.2	**QFM81.2**
Room hygrostat, setpoint setting range 15...95 % r.h., setpoint adjuster inside device	N1514	BPZ:QFM81.21	**QFM81.21**
Condensation monitor	N1542	BPZ:QXA2000	**QXA2000**
Differential pressure monitor	N1552	BPZ:QBM81..	**QBM81..**
Temperature controller	N1205	BPZ:RAK-TR.1..H	**RAK-TR.1..H**
Thermal reset limit thermostat	N1202	BPZ:RAK-TW.1..H	**RAK-TW.1..H**
Temperature limiter	N1206	BPZ:RAK-TB.1..M	**RAK-TB.1..M**
Safety limit thermostat	N1204	BPZ:RAK-ST..M	**RAK-ST..M**
Temperature controller / thermal reset limit thermostat	N1191	BPZ:RAZ-TW.1..	**RAZ-TW.1..**
Temperature controller / safety limit thermostat	N1192	BPZ:RAZ-ST..	**RAZ-ST..**
Changeover thermostat, changeover, 30 °C / 19 °C, IP54	N1295	BPZ:RYT182	**RYT182**

Room units

Product Title	Data sheet	Stock No.	Product No.
Room temperature sensor LG-Ni1000	N1721	BPZ:QAA24	**QAA24**
Front module with passiv temperature measurement, LG-Ni1000	N1408	S55720-S133	**AQR2531ANW**
Front module with passiv temperature measurement, Pt1000	N1408	S55720-S134	**AQR2531BNW**
Room unit with room temperature sensor and setpoint adjuster	N1721	BPZ:QAA25	**QAA25**
Room unit with room temperature sensor and setpoint readjuster -3...3 K	N1721	BPZ:QAA27	**QAA27**
Room temperature sensor LG-Ni1000 for mounting on recessed conduit boxes	N1722	BPZ:QAA64	**QAA64**
Room unit with KNX bus	N1633	BPZ:QAW740	**QAW740**
Room sensor for humidity (DC 0...10 V)	N1857	BPZ:QFA2000	**QFA2000**
Room sensor for humidity (DC 0...10 V) and temperature (LG-Ni1000)	N1857	BPZ:QFA2020	**QFA2020**
Room sensor for humidity (DC 0...10 V) and temperature (DC 0...10 V)	N1857	BPZ:QFA2060	**QFA2060**
Room sensor for humidity (DC 0...10 V) for demanding requirements	N1858	BPZ:QFA3100	**QFA3100**
Room sensor for humidity (DC 0...10 V) and temperature (DC 0...10 V) for demanding requirements	N1858	BPZ:QFA3160	**QFA3160**
Room sensor for humidity (DC 0..10V) and temperature (DC 0..10V) with calibration certificate	N1859	BPZ:QFA4160	**QFA4160**
Indoor air quality controller with integrated VOC sensor for mixed gas	N1571	BPZ:QPA84	**QPA84**
Room air quality sensor CO_2 / temperature / rel. Humidity / VOC	N1961	BPZ:QPA20..	**QPA..**

Step switches, signal converters and transformers

Product Title	Data sheet	Stock No.	Product No.
Variable speed drive	N5192	BPZ:SED2..	**SED2..**
Transformers	N5536	BPZ:SEM62..	**SEM62..**
Current valve	N4937	BPZ:SEA45.1	**SEA45.1**
Signal converter DC 0...10 V or DC 0 / 10 V in AC 0 / 24 V	N5102	BPZ:SEM61.4	**SEM61.4**
Signal converter with preprogrammed applications	N5146	BPZ:SEZ220	**SEZ220**

Service tool

Product Title	Data sheet	Stock No.	Product No.
Service tool for KNX / LPB	N5655	BPZ:OCI700.1	**OCI700.1**

Current valve

SEA45.1

For modulating output control of electric air heater batteries or triac control with zero-point switching. Galvanic separation. Control panel mounting, DIN rail mounting.

Data sheet	N4937
Operating voltage	AC 24 V
Frequency	50/60 Hz
Power consumption	0.5 VA
Positioning signal	AC 24 V (pulse / pause)
Triac outputs	Potential-free
Triac output, switching voltage	AC 42...660 V
Triac output, switching current	Max. 25 A
Triac output, switching output	0.04...10 kW
Degree of protection	IP20
Dimensions (W x H x D)	45 x 103 x 103 mm

Stock No.	Product No.
BPZ:SEA45.1	**SEA45.1**

Signal converter DC 0...10 V or DC 0 / 10 V in AC 0 / 24 V

SEM61.4

For converting a DC 0...10 V or DC 0 / 10 V input signal to a pulse-width modulated output signal AC 24 V for the control of maximum 20 current valves

Data sheet	N5102
Operating voltage	AC 24 V
Frequency	50/60 Hz
Power consumption	1 VA
Analog input, signal	DC 0...10 V
Digital input, contact query	DC 0/10 V
Triac output, switching voltage	AC 24 V
Dimensions (W x H x D)	36 × 90 × 60 mm

Stock No.	Product No.
BPZ:SEM61.4	**SEM61.4**

Signal converter DC 0...20 V Phs to DC 0...10 V

SEZ91.6

For the conversion of DC 0...20 VPh signals
to DC 0...10 V signals

Data sheet	N5143
Operating voltage	AC 24 V
Frequency	50/60 Hz
Power consumption	0.5 VA
Analog output, signal	DC 0...10 V
Analog input, signal	DC 0...20 V Phs
Dimensions (W x H x D)	57 x 22 x 18 mm

Note: Use type SEZ91.PU-K4 for signals from RDE2, RDN2, PU-K4!

Stock No.	Product No.
BPZ:SEZ91.6	**SEZ91.6**

UA1T

Power amplifier for thermal actuators AC 24 V, PWM

The UA1T power amplifier is used to allow the connection of additional valve actuators to controllers with an AC 24 V output signal.

Data sheet	N3591
Operating voltage	AC 24 V
Dimensions (W x H x D)	55 x 18 x 22 mm

Stock No.	Product No.
BPZ:UA1T	**UA1T**

SEZ220

Signal converter with preprogrammed applications

- Maximum and minimum selection
- Calculation of average
- Calculation of enthalpy, enthalpy differential, absolute humidity, dewpoint
- Flexible adaptation, limitation, inversion and conversion of input signal
- Tested preselected applications
- Flexible configuration

Data sheet	N5146
Operating voltage	AC 24 V
Frequency	50/60 Hz
Power consumption	5 VA
Universal inputs, number	5
Universal input, signal	0...1000 Ohm DC 0...10 V LG-Ni1000 Pt1000 T1 (PTC)
Analog outputs, number	2
Analog output, signal	DC 0...10 V
Analog output, current	Max. 1 mA
Dimensions (W x H x D)	123 x 90 x 86 mm

Stock No.	Product No.
BPZ:SEZ220	**SEZ220**

Passive setpoint adjusters, for flush panel mounting

BSG21..

Setpoint adjuster for flush panel mounting 48 x 48 mm, with 2 adjustable stops for setpoint limitation. With transparent plastic cover and scales according to the temperature ranges.

Data sheet	N1991
Degree of protection	IP42
Dimensions (W x H x D)	48 × 48 × 46 mm

Range overview BSG21..

Temperature range	Analog output, signal	Data sheet	Stock No.	Product No.
**Various	0...1000	N1991	BPZ:BSG21.1	**BSG21.1**
0...50 °C	LG-Ni1000	N1991	BPZ:BSG21.2	**BSG21.2**
10...30 °C	LG-Ni1000	N1991	BPZ:BSG21.3	**BSG21.3**
-20...20 °C 20...60 °C -3...3 K	LG-Ni1000	N1991	BPZ:BSG21.5	**BSG21.5**

For BSG21.1: Scale 0...50 °C included as standard. Additional scales are available as BSG-Z accessories

Active setpoint adjuster 0...100 %, for flush panel mounting

BSG61

Setpoint adjuster for flush panel mounting 48 x 48 mm, with 2 adjustable stops, for setting or limiting a setpoint or positioning signal. With transparent front cover and exchangeable scales, depending on requirements. Supplied with 0...100 % scale (other scales availables as accessories under BSG-Z).

Data sheet	N1992
Operating voltage	AC 24 V DC 15...24 V
Power consumption	0.3 W
Analog output, signal	DC 0...10 V
Connection cable	Max. 2.5 mm^2 4-wire
Degree of protection	IP42
Dimensions (W x H x D)	48 × 48 × 46 mm

Stock No.	Product No.
BPZ:BSG61	**BSG61**

Accessories for setpoint adjusters BSG21.1 and BSG61

Product Title	Data sheet	Stock No.	Product No.
Complete range of scales for BSG..	N1991	BPZ:BSG-Z	**BSG-Z**

QAX160

Touch Panel

Central device in mini standard system
- Colorful LCD display and touch screen for easy operation
- Offer in-built standard application to connect with RWD62/68+SEZ50MB, RDF302, PPM-1U32.MPR as a system

Data sheet	N3974
Operating voltage	DC 24 V
Power consumption	15 W
Ambient temperature, operation	0...45 °C
Communication	Modbus RTU
Display	TFT LCD, LED backlight
Display size	10.2"
Keyboard	Resistive touch screen
Degree of protection	IP65
Mounting	Panel
Dimensions (W x H x D)	274 mm x 40 mm x 193 mm

Stock No.	Product No.
S55620-H100	QAX160

SEZ50MB

Modbus interface for RWD

Adaptor to equip all standalone RWD primary control products with communicative functions via Modbus

Data sheet	N3099
Operating voltage	AC 24 V
Power consumption	3 A
Ambient temperature, operation	0...50 °C
Communication	Modbus
Degree of protection	IP20
Dimensions (W x H x D)	113.8 mm x 56.4 mm x 106 mm

Stock No.	Product No.
S55370-C120	**SEZ50MB**

PPM-1U32.MPR

Remote I/O expansion module

Remote device to extend the quantity of I/Os in system via Modbus.
AC 24 V power supply, 1 universal input, 3 digital inputs and 2 relay digital outputs, Modbus interface

Data sheet	140-1138
Operating voltage	AC 24 V
Power consumption	7 VA
Digital outputs	2 normally open relays
Digital inputs, number	3
Relay output, switching current	AC 230V
Relay output, switching voltage	5 (2) A
Universal inputs	1...10 kΩ Type II NTC Thermistor or dry contact
Universal inputs, number	1
Summary	Communicative expansion I/O module
Dimensions (W x H x D)	154 mm x 40 mm x 114 mm

Stock No.	Product No.
S55664-J111	PPM-1U32.MPR

NEW PRODUCT

Universal digital indicator

BAU200

Universal single point digital indicator
- Suitable for front-mounting in control panel
- With LED display
- Input signal (type of signal and measuring range) can be set with buttons
- For all Siemens Building Technologies sensors (LG-Ni 1000, T1, PT100, PT 1000, 0 ... 10 V)

Data sheet	N5312
Operating voltage	AC 24 V
Frequency	50/60 Hz
Power consumption	<8 VA
Analog output, signal	DC 0...10 V
Analog input, signal	DC 0...10 V LG-Ni1000 Pt100 Pt1000 T1 (PTC)
Degree of protection	IP50
Dimensions (W x H x D)	96 x 48 x 83 mm

Stock No.	Product No.
BPZ:BAU200	**BAU200**

Digital time switch, 1-channel, with 7-day program

SEH62.1

Programmable as 24-hour or 7-day time switch. Wall or DIN rail mounting.

Data sheet	N5243
Operating voltage	AC 230 V
Frequency	50/60 Hz
Power consumption	3 VA
Buffer time	72 h
Display	LCD
Degree of protection	IP20
Dimensions (W x H x D)	79 × 106 × 56 mm
Digital input, contact query	8 mA DC 24 V
Digital input, application	Countdown timer

Stock No.	Product No.
BPZ:SEH62.1	**SEH62.1**

SEM62..

Transformers

Transformer with housing, providing a reduction in voltage from AC 230 V to AC 24 V (output power 30 VA)
- Self-resetting fuse integrated on the primary side
- Secondary On/Off switch and replaceable fuse (SEM62.2 only)
- Plug-in screw terminals
- Two secondary output plug-in terminals

Data sheet	N5536
Frequency	50/60 Hz
Primary voltage	AC 230 V
Secondary voltage	AC 24 V
Power output	30 VA
Degree of protection	IP20
Dimensions (W x H x D)	114 × 106 × 57 mm
Mounting	On DIN rail With screws

Range overview SEM62..

Product Title	Stock No.	Product No.
Standard version	BPZ:SEM62.1	**SEM62.1**
Standard version incl. switch and exchangeable fuse on the secondary side	BPZ:SEM62.2	**SEM62.2**

Accessories for SEM62..

Product Title	Data sheet	Stock No.	Product No.
Protective big enclosure for wall mounting		BPZ:ARG62.22	**ARG62.22**

N 146/02 KNX/IP Router

5WG11461AB02

The IP Router has these characteristics:
- Simple connection to hierarchically superimposed systems via Internet Protocol (IP)
- Direct access to the KNX/EIB installation from any access point of the IP network (up to four KNXnet/IP-Tunneling connections)
- Fast communication between KNX/EIB lines, areas and systems (KNXnet/IP Routing)
- Communication between buildings and facilities
- Filtering, blocking and routing of telegrams depending on
- individual address
- group address
- LED display of
- operation
- KNX/EIB communication
- IP communication (Rx/Tx)
- Simple configuration with ETS
- Easy connection to SCADA and Facility Management systems

Data sheet	2.11.1.13
Voltage supply	Power over Ethernet or external SELV power supply AC/DC 24 V nominal
Operating voltage	AC 12...24 V DC 12...30 V
Dimension width (1 MW = 18 mm)	2 MW
Bus connection	Integrated bus coupling units Via bus terminal
Communication	Bus: KNX (S-mode and LTE mode) Ethernet, RJ45 socket

Stock No.	Product No.
5WG1146-1AB02	**5WG11461AB02**

N 148/22 KNX/IP Interface

5WG11481AB22

The IP Interface has these characteristics:
- Simple connection to hierarchically superimposed systems via Internet Protocol (IP)
- Direct access to the KNX/EIB installation from any access point to the IP network (KNXnet/IP Tunneling)
- Communication between buildings and facilities
- LED display of
- operation
- KNX/EIB communication
- IP communication
- Simple configuration with standard ETS
- Easy connection to SCADA and Facility Management systems

Data sheet	2.11.1.14
Voltage supply	Power over Ethernet
Operating voltage	AC 12...24 V DC 12...30 V
Dimension width (1 MW = 18 mm)	2 MW
Bus connection	Integrated bus coupling units Via bus terminal
Communication	Bus: KNX Ethernet, RJ45 socket

Stock No.	Product No.
5WG1148-1AB22	**5WG11481AB22**

5WG11481AB11

N 148/11 USB interface

For connection of a PC over USB interface for parameter assignment, visualization, logging and diagnosis of bus devices. Electrically isolated access to the bus line via integrated socket.

Data sheet	2.11.1.12
Voltage supply	USB KNX bus
Dimension width (1 MW = 18 mm)	1 MW
Bus connection	Integrated bus coupling units Via bus terminal Via data rail
Communication	Bus: KNX (S-mode and LTE mode) USB1.1

Stock No.	Product No.
5WG1148-1AB11	**5WG11481AB11**

Line/backbone coupler

N 140/..3

- For data exchange between two KNX bus lines with telegrams of up to 64 byte
- For use as line coupler for connecting a line to the main line or as backbone coupler for connecting a main line to the backbone line or as repeater for connecting two segments of the same line, with electrical isolation of the two bus lines
- Loadable filter table for control of the data exchange between the two bus lines
- Additional loadable filter table for telegrams with LTE addressing
- Detection of a communication fault on the lower-level line and signaling to the higher-level line
- 3 LEDs for display of availability and receipt of a telegram per line
- Power supply from the main line
- Modular installation device for mounting on TH35 EN 60715 mounting rail.

Voltage supply	KNX bus
Communication	Bus: KNX (S-mode and LTE mode)

N 140/03 line/backbone coupler

5WG11401AB03

- Bus connection to the line via contact system for data rail and to the main line via bus terminal

Data sheet	2.11.1.12
Dimension width (1 MW = 18 mm)	1 MW
Bus connection	Via bus terminal Via data rail

Stock No.	Product No.
5WG1140-1AB03	**5WG11401AB03**

N 140/13 line/backbone coupler

5WG11401AB13

- Bus connection to the line and to the main line via bus terminal

Data sheet	2.14.3.3
Dimension width (1 MW = 18 mm)	2 MW
Bus connection	Via bus terminal

Stock No.	Product No.
5WG1140-1AB13	**5WG11401AB13**

N 125/..2

Power supply unit KNX/EIB bus

The power supply unit N 125/..2 provides the system power necessary for the KNX/EIB bus out of AC 120...230V and DC 220V. The connection to the bus line is established by clicking the device onto the DIN-rail (with a data rail installed) and/or via the bus connection block located on the front side. The choke is integrated in the compact housing. For each bus line, at least one power supply unit N 125/..2 is needed. Up to two power supply units may be attached to a single bus line.
By parallel use of two 640 mA power supplies 1280 mA are available for up to 128 bus devices at one line.
All power supplies can operate with DC 176...270 V provided by an emergency power battery (used as supply for e.g. emergency lighting). The already installed emergency power supply can also be used for the supply of the bus. Because of the continuous power supply provided to the bus operating, warning and alarm messages can still be sent.

Data sheet	2.14.4.4
Operating voltage	AC 120...230 V DC 220 V
Dimension width (1 MW = 18 mm)	4 MW
Bus connection	Integrated choke Via bus terminal Via data rail

Range overview Power supply N 125/..2

Product Title	Stock No.	Product No.
Power supply unit DC 29 V, 160 mA with additional unchoked output, N 125/02	5WG1125-1AB02	5WG11251AB02
Power supply unit DC 29 V, 320 mA with additional unchoked output, N 125/12	5WG1125-1AB12	5WG11251AB12
Power supply unit DC 29 V, 640 mA with additional unchoked output, N 125/22	5WG1125-1AB22	5WG11251AB22

5WG11201AB02

N 120/02 choke, 640 mA

For connection to the unchoked output of the KNX N 125/..2 power supply unit
- Contact system for data rail
- Low-voltage terminal for unchoked voltage and bus
- Modular installation devices for mounting on TH35 EN 60715 mounting rail

Data sheet	2.14.2.2
Dimension width (1 MW = 18 mm)	2 MW
Bus connection	Integrated choke Via bus terminal Via data rail

	Stock No.	Product No.
	5WG1120-1AB02	**5WG11201AB02**

NEW PRODUCT

Software and central communication units

2

Overview and selection tools	Overview of product details	2-2
Operating, service and alarm software	For HVAC plants: ACS790 / OCI700.1	2-7
Central communication units	For remote control via KNX: OZW7..	2-9
	For remote control via LPB: OCI611.. / AEW..	2-12
	For remote control via LPB: OZW672..	2-14

Overview standard systems

Communication	KNX (Konnex)	LPB (Local process bus)
Standard systems for:	**Heating, ventilation or air conditioning**	**Heating plants**
Communication central unit	OZW771.. OZW772..	OCI611... OZW672..
Software	ACS790	ACS790
Service Tool	OCI700.1	OCI700.1
Heating controllers	Synco™ ■ RMH760 Heating controllers ■ RMK770 Boiler sequence controllers	■ RVL400 Heating controllers ■ RVP300 Heating controllers ■ RVD200 District heating controllers
Ventilation and air conditioning controllers	Synco™ series ■ RMU700 Universal controllers	
Switching and Monitoring Device	Synco™ ■ RMS705	
Room controllers	Synco™ ■ RMB795 Control center ■ RXB / RXL Room controllers	
Home Automation System	Synco™ living ■ QAX910, QAX903, QAX913	
Energy meters		
Thermostats	Synco™ ■ RDF301, RDF301.50 ■ RDG100KN, RDG400KN ■ RDU341 ■ RDF600KN	

KNX system

Standard systems for heating, ventilation or air conditioning Synco™ (KNX)
Low engineering system to easily build complex applications with flexible and modular combinations of standard controllers Synco™ 700. Standard Systems for HVAC plants are capable to be remote operated and can generate alarms to service centers. Full control without extensive engineering.

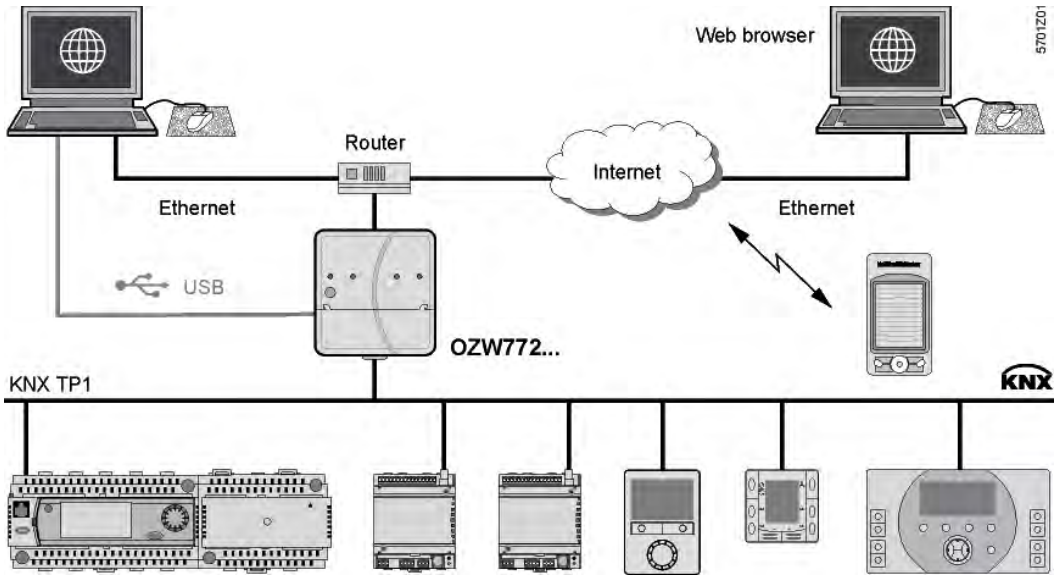

Communication central units	OZW772			
Device versions	OZW772.01	OZW772.04	OZW772.16	OZW772.250
No. of comm. devices [1]	1	4	16	250
Plant operation				
ACS software	Yes			
Web Browser	Yes			
Interface	Ethernet, USB			
Alarming				
Max. message receivers	4			
ACS alarm via PC	No			
Fax	No			
Pager	No			
SMS	No			
e-Mail	Yes (Ethernet)			
Offline trend function	Yes			
Digital inputs (potential free)	None			
Universal inputs (UI)	None			
As alarm input	No			
As pulse counter	No			
As counter (operating hours)	No			
Digital output	None			
Local device operation	Button / Switch			
Bus power supply	No			
General device data				
Operating voltage	AC 230 V ±10 %			
Frequency	50/60 Hz			
Power consumption	3 VA			
Degree of protection	IP30			

[1] Synco™ controller series 700, QAW740, RXB / RXL, RDG, RDF, RDU, Synco™ living QAX9..

KNX system

Standard systems for heating, ventilation or air conditioning Synco™ (KNX)
Low engineering system to easily build complex applications with flexible and modular combinations of standard controllers Synco™ 700. Standard Systems for HVAC plants are capable to be remote operated and can generate alarms to service centers. Full control without extensive engineering.

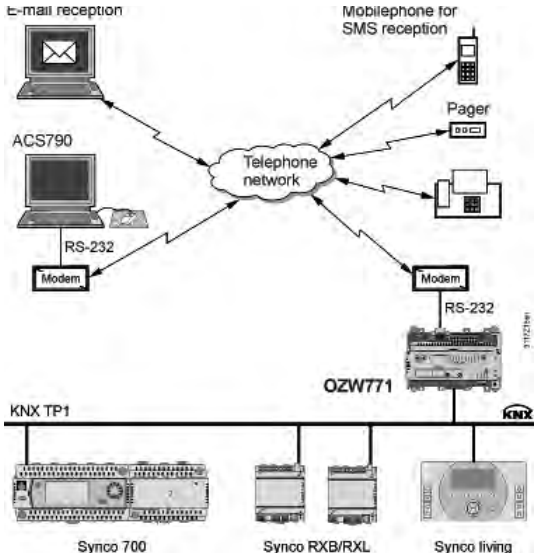

Communication central units	OZW771		
Device versions	OZW771.04	OZW771.10	OZW771.64
No. of comm. devices [1]	4	10	64
Plant operation			
ACS software		Yes	
Web Browser		No	
Interface		RS232	
Alarming			
Max. message receivers		2	
ACS alarm via PC		Yes	
Fax		with SMS via GSM	
Pager		Yes	
SMS		Yes	
e-Mail		with SMS via GSM	
Offline trend function		No	
Digital inputs (potential free)		2	
Universal inputs (UI)			
As alarm input		Yes	
As pulse counter		No	
As counter (operating hours)		No	
Digital output		None	
Local device operation		Button / Switch	
Bus power supply		No	
General device data			
Operating voltage		AC 230 V ±10 %	
Frequency		50/60 Hz	
Power consumption		5 VA	
Degree of protection		IP20 [2]	

[1] Synco™ controller series 700, QAW740, RXB / RXL, RDG, RDF, RDU, Synco™ living QAX9..
[2] IP30 with terminal covers

Web-Server

Standard system for heating plants (LPB)
Low engineering system to easily build complex applications with flexible combinations of standard controllers Series RVL400, RVP300, and RVD200. Standard Systems for heating plants are capable to be remote operated and can generate alarms to service centres: Full control without extensive engineering.

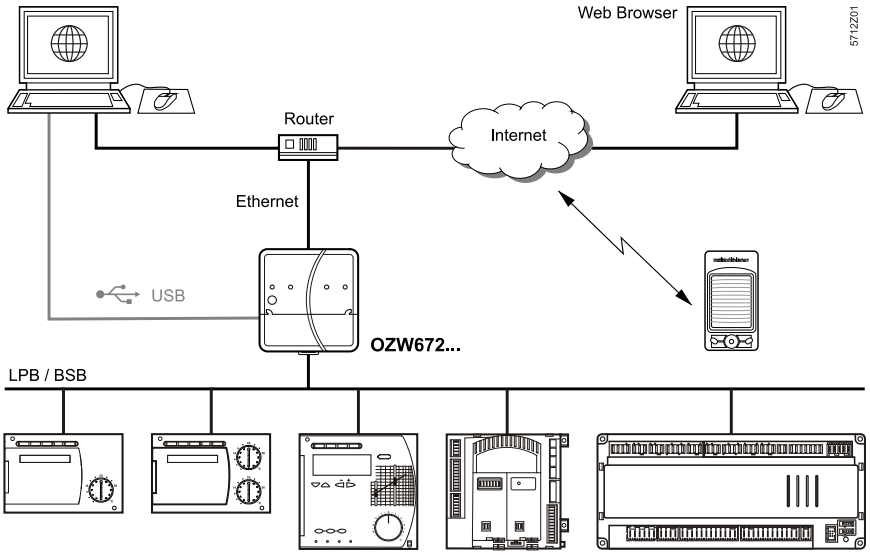

Communication central units	OZW672		
Device versions	OZW672.01	OZW672.04	OZW672.16
No. of comm. devices [1]	1	4	16
Plant operation			
ACS software		Yes	
Web Browser		Yes	
Interface		Ethernet, USB	
Alarming			
Max. message receivers		4	
ACS alarm via PC		No	
Fax		No	
Pager		No	
SMS		No	
e-Mail		Yes (Ethernet)	
Offline trend function		Yes	
Digital inputs (potential free)		2	
Universal inputs (UI)		None	
As alarm input		2	
As pulse counter		No	
As counter (operating hours)		No	
Digital output		None	
Local device operation		Button / Switch	
Bus power supply		No	
General device data			
Operating voltage		AC 230 V ±10 %	
Frequency		50/60 Hz	
Power consumption		3 VA	
Degree of protection		IP30	

[1] RVL4..,RVP3..,RVD2..,RVP5..,RVA..,RVS..,RVC..,LMU..,LMS..

LPB system

Standard system for heating plants (LPB)
Low engineering system to easily build complex applications with flexible combinations of standard controllers Series RVL400, RVP300, and RVD200. Standard Systems for heating plants are capable to be remote operated and can generate alarms to service centres: Full control without extensive engineering.

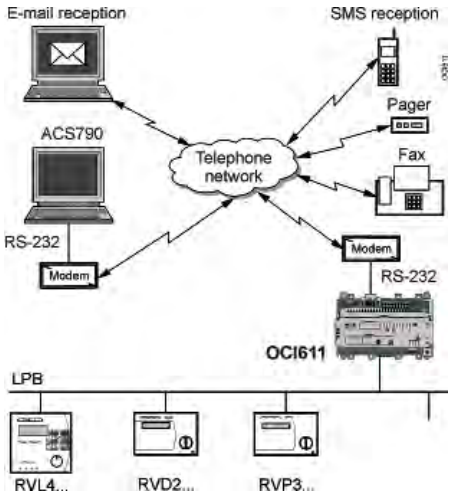

Communication central units	OCI611		
Device versions	OCI611.01	OCI611.05	OCI611.16
No. of communication contollers	1	5	16
No. of external meter modules			
No. of ext. temperature sensor adapters			
Plant operation			
ACS software	Yes		
Interface	RS232		
Alarming			
Max. message receivers	2		
ACS alarm via PC	Yes		
Fax	mit SMS via GSM		
Pager	mit SMS via GSM		
SMS	Yes		
Printer	No		
e-Mail	with SMS via GSM		
Offline trend funktion	No		
Digital inputs (potential free)	2		
As alarm input	Yes		
As counter (operating hours)	No		
Digital outputs	None		
Local device operation	Button / Switch		
Bus power supply	No		
General device data			
Operation voltage	AC 230 V ±10 %		
Frequency	50/60 Hz		
Power consumption	5 VA		
Degree of protection	IP20 [1]		

[1] IP30 with terminal covers

Commissioning and plant operating software

ACS790

PC software for commissioning, operating and supervision of HVAC plants.
Consists of 3 programs: ACS-Tool, ACS-Alarm and ACS-Batchjob.

ACS-Tool:
for plant commissioning, operating and service
- Popcard (standard and customized)
- Plant diagram (standard and customized)
- Plant view (standard and customized)
- Trend function (online and offline)
- File transfer function
- Parameter settings
- Commissioning protocol
- Connection mode (directly and via modem)

ACS-Alarm:
- for receiving and managing alarms

ACS-Batchjob:
- for time scheduled task execution

Commissioning and service via OCI700 communication interface for
KNX devices
- Central units: OZW771, OZW772, OZW775
- Synco™ living: QAX9...
- Controllers: Synco™200, Synco™700, RXB/RXL
- Thermostats: RDF..., RDG..., RDU341

LPB devices
- Central units: OCI600, OCI611, OZW672
- Controllers: RVA..., RVD..., RVL..., RVP..., RVS..., RWI...

Remote operation and supervision for
KNX systems
- Central units: OZW771, OZW772, OZW775
- Synco™ living: QAX9...
- Controllers: Synco™700, Synco RXB/RXL
- Thermostats: RDF..., RDG..., RDU341

LPB systems
- Central units: OCI600, OCI611, OZW672
- Controllers: RVA..., RVD..., RVL..., RVP..., RVS..., RWI...

M-Bus systems
- Central units: OZW10, OZW111
- RVD2... controllers
- Metering devices

Data sheet N5649

	Stock No.	Product No.
	S55800-Y100	**ACS790**

2

OCI700.1

Service tool for KNX / LPB

The service tool consists of:
- ACS790 CD-ROM
- OCI700 service interface
- USB cable
- Service cable for Synco™ controllers
- Service cable for SIGMAGYR® and ALBATROS controllers

Commissioning and diagnostics of the following devices:

KNX devices:
- Central communication units OZW771, OZW772 and OZW775
- Heating controllers RMH of the 700-series
- Boiler sequence controllers RMK of the 700-series
- Universal controllers RMU of the 700-series
- Universal controllers RLU of the 200-series
- Switching and monitoring devices RMS of the 700-series
- Room unit QAW740
- Central control units RMB of the 700-series
- Individual room controllers RXB... / RXL...
- Signal converter SEZ220
- Synco™ living central apartment unit QAX9...
- Synco™ thermostats RDF..., RDG..., RDU341

LPB devices:
- Central communication units OCI600, OCI611 and OZW672
- Heating controllers RVL of the 400-series
- Heating controllers RVP of the 300-series
- Energy managers RVP of the 500-series
- District heating controllers RVD of the 200-series
- Heating controllers of the RVA- and RVS-series
- Ventilation controllers of the RWI65-series

Data sheet N5655

	Stock No.	Product No.
	BPZ:OCI700.1	**OCI700.1**

KNX standard systems main components

The KNX standard system consists of the following main components:

Product Title	Data sheet	Stock No.	Product No.
Commissioning and plant operating software	N5649	S55800-Y100	**ACS790**
Central communication unit OZW771..	N3117	BPZ:OZW771..	**OZW771..**
Web server for KNX devices	N5701	BPZ:OZW772..	**OZW772..**
Heating controller	N3133	BPZ:RMH760B..	**RMH760B..**
Boiler sequence controller	N3132	BPZ:RMK770..	**RMK770..**
Universal controller	N3150	BPZ:RMUB..	**RMUB..**
Switching and monitoring device	N3124	BPZ:RMS705B..	**RMS705B..**
Room unit with KNX bus	N1633	BPZ:QAW740	**QAW740**
Central control unit	N3121	BPZ:RMB795..	**RMB795..**
Room controller for 3-speed fan	N3873	BPZ:RXB21.1/FC-10	**RXB21.1/FC-10**
Room controller for 3-speed fan	N3873	BPZ:RXB21.1/FC-11	**RXB21.1/FC-11**
Room controller with 3-speed fan and electric heating coil	N3873	BPZ:RXB22.1/FC-12	**RXB22.1/FC-12**
Room controller for chilled ceilings and radiators	N3874	BPZ:RXB24.1/CC-02	**RXB24.1/CC-02**
Room controller for 3-speed fan	N3877	BPZ:RXL21.1/FC-10	**RXL21.1/FC-10**
Room controller for 3-speed fan	N3877	BPZ:RXL21.1/FC-11	**RXL21.1/FC-11**
Room controller with 3-speed fan and electric heating coil	N3877	BPZ:RXL22.1/FC-12	**RXL22.1/FC-12**
Room controller for chilled ceilings and radiators	N3878	BPZ:RXL24.1/CC-02	**RXL24.1/CC-02**
Central apartment unit for HVAC and energy consumption data collection	N2741	BPZ:QAX903..	**QAX903..**
Central apartment unit	N2707	BPZ:QAX910..	**QAX910..**
Central apartment unit with energy consumption data collection	N2740	BPZ:QAX913..	**QAX913..**
Semi Flush-mount room thermostats with KNX communications, 2-/4-pipe fan coils or DX type equipment	N3171	BPZ:RDF301..	**RDF..KNX Semi Flush Mount**
Room thermostat with KNX communications, AC 230 V, for fan coil units and universal applications	N3191	S55770-T163	**RDG100KN**
Room thermostat with KNX communications, AC 24 V, VAV heating and cooling systems	N3192	S55770-T165	**RDG400KN**
Semi Flush-mount room thermostat with KNX communications, for VAV application	N3172	S55770-T106	**RDU341**

Central communication units
For remote control via KNX: OZW7..

OZW771..

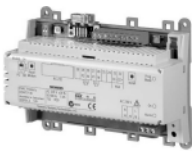

Central communication unit OZW771..

The OZW771... central communication unit is a component of the Synco™ system. It is used for the remote operation and supervision of plants with Synco™ 700 Synco™ RXB... and Synco™ living units in KNX network systems.
Alarm messages can be delivered to
- ACS operating station (ACS alarm)
- SMS receivers
- Fax machines*
- Pagers
- E-mail receivers*

* Only possible with GSM modem, depending also on the telephone provider

Data sheet	N3117
Operating voltage	AC 230 V
Frequency	50/60 Hz
Power consumption	5 VA
Digital inputs, number	2
Dimensions (W x H x D)	161 x 110 x 62 mm

Range overview OZW771..

Product Title	Data sheet	Stock No.	Product No.
Central communication unit, max. 4 controllers	N3117	BPZ:OZW771.04	**OZW771.04**
Central communication unit, max. 10 controllers	N3117	BPZ:OZW771.10	**OZW771.10**
Central communication unit, max. 64 controllers	N3117	BPZ:OZW771.64	**OZW771.64**

Accessory for OZW771..

Product Title	Stock No.	Product No.
Terminal covers	BPZ:7411100280	**7411100280**

Refer to the central unit data sheet for details

Web server for KNX devices

OZW772..

Web server OZW772 allows for remote plant control and monitoring via the web

- Operate web browser via PC/laptop and Smartphone
- Operate ACS (PC/laptop with ACS plant operating software)
- Connections: USB and Ethernet
- Display fault messages in the web browser
- Send fault messages to a maximum of 4 e-mail recipients
- Periodically send system reports to e-mail recipients
- Visualize the plants in the web browser based on standard plant diagrams and customized plant web pages
- Acquire and display consumption data
- Send consumption data file to 2 email recipients
- Encrypted with https and TLS for emails
- Direct commissioning with web browser or ACS service tool

Data sheet	N5701
Operating voltage	Power pack: AC 230 V Web server: DC 24 V
Communication	KNX TP1 (wire-Bus) Ethernet, RJ45 plug socket (shielded) USB V2.0 (universal serial bus)
Mounting	On DIN rails With Screws
Dimensions (W x H x D)	87.5 x 90 x 40 mm

Range overview OZW772..

Product Title	Stock No.	Product No.
Web server for 1 KNX device	BPZ:OZW772.01	**OZW772.01**
Web server for 4 KNX devices	BPZ:OZW772.04	**OZW772.04**
Web server for 16 KNX devices	BPZ:OZW772.16	**OZW772.16**
Web server for 250 KNX devices	BPZ:OZW772.250	**OZW772.250**

Central communication units
For remote control via LPB: OCI611.. / AEW..

LPB standard system main components

The LPB standard system consists of the following main components:

Product Title	Data sheet	Stock No.	Product No.
Commissioning and plant operating software	N5649	S55800-Y100	**ACS790**
Central communication unit	N2533	BPZ:OCI611..	**OCI611..**
Web Server for LPB devices	N5712	BPZ:OZW672..	**OZW672..**
Heating controller for a second heating circuit	N2543	BPZ:RVL479	**RVL479**
Heating controller for 1 heating circuit or boiler temperature control	N2540	BPZ:RVL480	**RVL480**
Heating controller for boiler temperature control and d.h.w. heating	N2541	BPZ:RVL481	**RVL481**
Heating controller for boiler temperature control for modulating or 2-stage burners with d.h.w. heating	N2542	BPZ:RVL482	**RVL482**
Heating controller for 1 heating circuit	N2545	S55370-C136	**RVP340**
Heating controller for 1 heating circuit and d.h.w.	N2545	S55370-C137	**RVP350**
Heating controller for 2 heating circuits and d.h.w.	N2546	S55370-C139	**RVP360**
District heating controller	N2513	BPZ:RVD25..	**RVD25..**
District heating controller	N2515	BPZ:RVD26..	**RVD26..**
Pulse adapter	N2831	BPZ:AEW2.1	**AEW2.1**

OCI611..

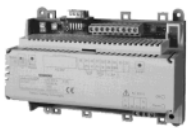

Central communication unit

Interface for the communication between the devices connected to the bus and the operator PC with ACS790 software.

- Alarm messages can be delivered to
  - ACS operating station (ACS alarm)
  - SMS receivers
  - Fax machines*
  - Pagers*
  - E-mail receivers*

  * Only possible with GSM modem, depending also on the telephone provider
- 2 digital inputs
- Connected to:
  - RVL heating controllers of the 400-series
  - RVP heating controllers of the 300-series
  - RVP energy managers of the 500-series
  - RVD district heating controllers of the 200-series

Data sheet	N2533
Operating voltage	AC 230 V
Frequency	50/60 Hz
Power consumption	5 VA

Range overview OCI611..

Product Title	Data sheet	Stock No.	Product No.
Central communication unit, max. 1 controller	N2533	BPZ:OCI611.01	**OCI611.01**
Central communication unit, max. 5 controllers	N2533	BPZ:OCI611.05	**OCI611.05**
Central communication unit, max. 16 controllers	N2533	BPZ:OCI611.16	**OCI611.16**

Accessory for OCI611..

Product Title	Stock No.	Product No.
Terminal covers	BPZ:7411100280	**7411100280**

Refer to the central unit data sheet for details

Pulse adapter

AEW2.1

Acquires and stores the pulses from 2 additional meters with pulse output (Reed contact with or without Namur circuitry), e.g. for hot water, cold water or gas meters, monitors the connections to them, delivers the cumulated consumption values, error messages, etc., to the building bus. Designed for mounting in control cabinets, on the wall, or on DIN rails.

Data sheet	N2831
Operating voltage	AC 24 V
Dimensions (W x H x D)	136 x 96 x 42 mm
Power consumption	1.2 VA

Stock No.	Product No.
BPZ:AEW2.1	**AEW2.1**

Central communication units
For remote control via LPB: OZW672..

OZW672..

Web Server for LPB devices

Web server OZW672 allows for remote plant control and monitoring via the web

- Operate web browser via PC/laptop and Smartphone
- Operate via ACS790 PC tool
- Connections: USB and Ethernet
- 2 digital inputs for fault messages
- Display fault messages in the web browser
- Send fault messages to a maximum of 4 email recipients
- Periodically send system reports to email recipients
- Visualize the plants in the web browser based on customized plant web pages
- Encrypted with https and TLS for emails
- Trending with ACS790
- Software update

Data sheet	N5712
Operating voltage	Power pack: AC 230 V Web server: DC 24 V
Digital inputs, number	2
Communication	LPB/BSB (wire-Bus) Ethernet, RJ45 plug socket (shielded) USB V2.0 (universal serial bus)
Mounting	On DIN rails With Screws
Dimensions (W x H x D)	87.5 x 90 x 40 mm

Range overview OZW672..

Product Title	Stock No.	Product No.
Web Server for 1 LPB/BSB device	BPZ:OZW672.01	**OZW672.01**
Web Server for 4 LPB devices	BPZ:OZW672.04	**OZW672.04**
Web Server for 16 LPB devices	BPZ:OZW672.16	**OZW672.16**

Room automation

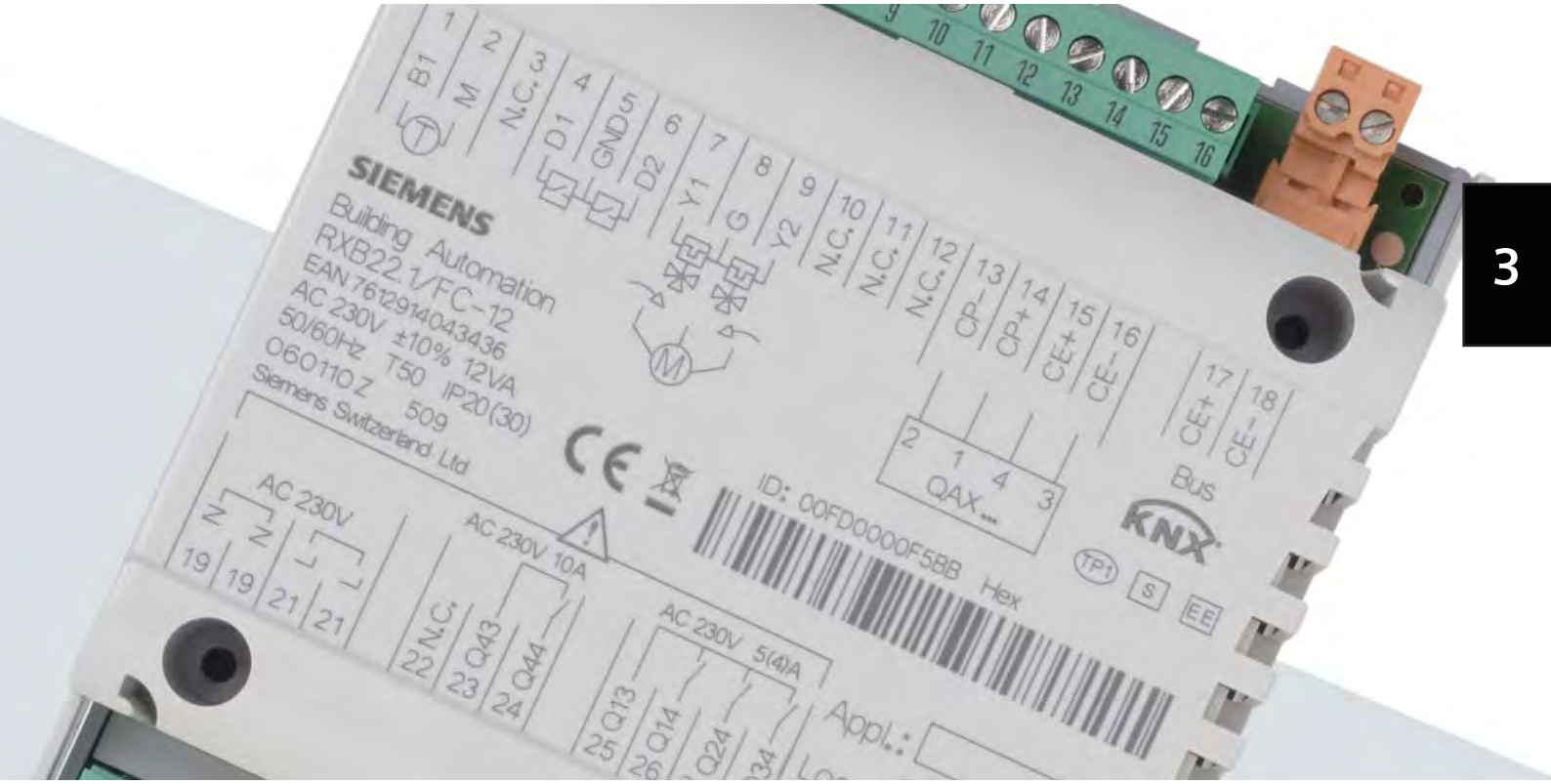

Overview and selection guides	Product overviews and application recommendations	3-2
Communicative controllers - RXL (Bus)	For fan coil, radiator, chilled ceiling	3-11
Communicative controllers - RXB (KNX)	For fan coil, radiator, chilled ceiling	3-15
Communicative central control unit (KNX)	Central control unit RMB.. for room controllers	3-19
Communicative controllers - RXC (LonWorks)	For radiator, chilled ceiling, VAV	3-21
	For fan coil, radiator, chilled ceiling	3-22
	For radiator, chilled ceiling and light	3-24
	For VAV and light	3-25
	Extension modules and accessories	3-27
Room operating units	For controllers RX.. (PPS2): QAX3.. / QAX8..	3-32
	For controllers RX.. (wireless): QAX9..	3-35
	For controllers RX.. (EnOcean and wireless): QAX9.. / RXZ9..	3-37
	For communicative controllers - RXC (LonWorks) QAX5..	3-40
	For controllers RM.. (KNX) QAW74..	3-41

Overview and selection tools
Product range overview

Room Controller	RXL..	RXB..	RXC1..	RXC2..	RXC3..	RXC4..
Communication	Bus	KNX	LonWorks			
Peripheral bus	PPS2	PPS2	PPS2			
Fan coil systems						
2-pipe system with changeover	■	■		■		
2-pipe system with changeover and electric air heater battery	■	■		■		
4-pipe system	■	■		■		
4-pipe system with electric air heater battery	■	■				
4-pipe system with supply air temperature limit	■	■		■		
2-pipe system with changeover and outside air damper	■	■		■		
4-pipe system with outside air damper	■	■		■		
2-pipe system and radiator	■	■		■		
4-pipe system, with one air damper	■	■		■		
Heated/chilled ceilings and radiators						
Chilled ceiling with dewpoint monitoring	■	■	■	■		
Chilled ceiling with dewpoint monitoring	■	■	■	■		
Chilled ceiling and radiator				■		
Chilled/heated ceiling, 2-pipe system with changeover			■	■		
Chilled/heated ceiling, 4-pipe system and 2 ON / OFF valves for changeover				■		
Divided chilled/heated ceiling: Cooling only and cooling/ heating with changeover via LonWorks bus				■		
Radiator with downdraft compensation	■	■	■	■		
Electric radiator			■	■		
VAV systems						
Single duct supply or extract air system			■		■	
Single duct supply air system with reheater/cooler					■	
Single duct supply air system with electric reheater					■	
Single duct supply and extract air system					■	
Single duct supply and extract air system with reheater/ cooler					■	
Single duct supply and extract air system with electric reheater					■	
Single duct supply or exract air system with radiator				■		
Single duct supply and extract air systems with radiator					■	
Single duct supply and extract air system with electric reheater					■	
Single duct supply and extract air systems with radiator/ chilled ceiling					■	
Fan powered box with electric reheater					■	
Lighting						
Manual/dimmable light control						■
Staircase lighting						■
Automatic operation with presence detector and/or daylight sensor						■
Daylight dependent light control						■
Shading						
Manual Shading Control						■
Automatic Operation with						
Glare protection						■
Heat protection						■

Roomautomation

Features	QAX.. 30.1	31.1	32.1	33.1	34.1	34.3	39.1	84.1	50..	51..	AQR... 2570.. & 253..	2576.. & 253..
Display					■	■		■	■	■		■ [3]
Mode selection			■	■	■	■		■	■	■		
Fan switch				■	■	■		■	■	■		
Setpoint adjuster		■	■	■	■	■	■	■	■	■		
Operation of light/blindes									■	■	■ [4]	■ [4]
Temperature sensor	■	■	■	■	■	■		■	■	■	■	■
Humidity sensor											■	■
Air quality sensor												■
Mounting												
Flush-mounted							■	■	■	■	■	■
Directly on wall	■	■	■	■	■	■						
Control panel(door)							■					
Communication												
Wireless												
PPS2	■	■	■	■	■	■	■	■				
LonWorks									■	■		
KNX											■	■
Controller												
RXL..	■	■	■	■	■	■	■	■			■	■
RXB..	■	■	■	■	■	■	■	■			■	■
RXC..	■	■	■	■	■	■	■	■	■	■		

Wireless-Roomautomation

Features	QAX.. 90.1	91.1	95.4	96.4	97.4	98.4
Display						
Mode selection					■	■
Fan switch						■
Setpoint adjuster		■		■	■	■
Temperature sensor	■	■	■	■	■	■
Mounting						
Flush-mounted			■	■	■	■
Directly on wall	■	■	■	■	■	■
Control panel(door)						
Communication						
Wireless	■	■	■	■	■	■
EnOcean			■	■	■	■
PPS2	■ [2]	■ [2]				
LonWorks			■ [1]	■ [1]	■ [1]	■ [1]
KNX			■ [1]	■ [1]	■ [1]	■ [1]
Controller						
RXL..	■	■				
RXB..	■	■	■	■	■	■
RXC..	■	■	■	■	■	■

[1] **Suitable receivers:** RXZ95.1/LON, RXZ97.1/KNX

[2] **Suitable receivers:** RXZ90.1

[3] LED for air quality indicator

[4] Via 2 potential free inputs

RXL applications

RXL – Powerful room controllers for temperature control in individual rooms
RXL ensures individual demand-based comfort in public buildings, offices, schools, hotels, etc. Flexible control of all types of equipment in individual rooms calls for economical and convenient solutions that can be integrated into existing or new systems and will retain their compatibility long into the future.

Communicating controllers for individual rooms
The communicating room controllers RXL21.1, RXL22.1 and RXL24.1 are used for temperature control in individual rooms. RXL39.1 support energy efficient EC fan-coils. Siemens actuator and sensor technology can be connected.

Easy commissioning with room operator unit
Commissioning and parameter-setting for RXL controllers is carried out directly on the controller, with the QAX34.3 room operator unit. There is no need for a network connection or a software tool. Mounting on a DIN rail is quick and simple.

User-friendly commissioning and service
The Service LED shows the operational status of the room controller at all times. For example, a flashing green LED is used to indicate normal, trouble-free operation, a continuous red LED for addressing mode and a flashing red LED to indicate a fault. With the service pin, all controllers can be easily identified for commissioning or maintenance purposes. As soon as the service pin is pressed, the red service LED on the controller lights up and the controller is displayed on a graphic of the building at the management station.

Complete range of standard room operating units
The extensive range of room operator units is available for direct operation and monitoring of setpoints and measured values in individual rooms. The range extends from very simple room temperature sensors to versatile room operator units with parameter-setting functions.

Connection to the Desigo building automation and control system
Desigo PX KNX allow for flexibly connecting RXL controllers to the Desigo building automation and control system, and hence acts as a gateway to BACnet. The connection provides access to other functions such as time schedules and central control of setpoints.
RXL thus fits into the overall expandable modular system, and ensures long-term cost-efficiency.

Integration into Synco™
The Synco™ central control unit RMB795 is used for controlling and monitoring the RXL controllers in a Synco™ system.

HVAC			
	Chilled ceiling Radiator-type systems		
	Fan coil units	QAX30 QAX31 QAX32 QAX33 QAX34 QAX39 QAX84 QAX90 QAX91 AQR2531..	RXL21.1 RXL22.1 RXL24.1 RXL39.1
		Room units	Compact

Fields of application
The scope of RXL is defined by the preprogrammed application software. The following pages provide an overview of the options and the corresponding devices. The devices are supplied preprogrammed with the applications. The required application can be selected by means of the Handy tool QAX34.3.

Due to the fact that the applications are predefined, engineering simply involves the definition of a small number of parameters, e. g.:
- ON / OFF or 3-point control of the valves and actuators
- Temperature setpoints
- Manual or automatic fan control

Fan coil systems

Application	Description	Devices
FNC02	2-pipe system with changeover	RXL21.1/FC-10
FNC03	2-pipe system with changeover and electrical reheater	RXL22.1/FC-12
FNC04	4-pipe system	RXL21.1/FC-10
FNC05	4-pipe system with electrical reheater	RXL22.1/FC-12
FNC08	4-pipe system with supply air temperature limitation	RXL21.1/FC-10
FNC10	2-pipe system with change over and outside air damper	RXL21.1/FC-11
FNC12	4-pipe system with outside damper	RXL21.1/FC-11
FNC18	2-pipe system with change over and radiator	RXL21.1/FC-11
FNC20	4-pipe system with air-side control	RXL21.1/FC-10
FNC02/03/04/08	2-pipe/4-pipe system with EC fan-coil support	RXL39.1/FC-13

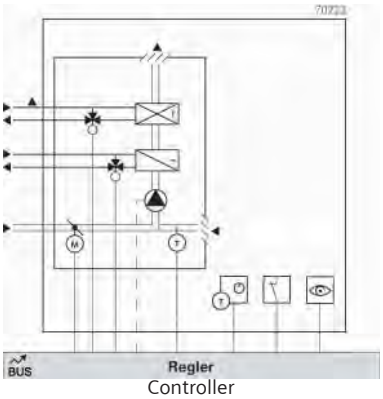

Controller

Common functions
- Window contact, occupancy detector, 4 operating modes
- Manual fan control with room unit
- Automatic fan control three-speed, 0..10 V continious speed (with RXL39.1/FC-13 only)
- Options for 2-pipe systems: heating only, cooling only or changeover

Heated/chilled ceilings and radiators

Application	Description	Devices
CLC01	Chilled ceiling with dewpoint monitoring	RXL24.1/CC-02
CLC02	Chilled ceiling with dewpoint monitoring, radiator with downdraft compensation	RXL24.1/CC-02
RAD01	Radiator with downdraft compensation	RXL24.1/CC-02

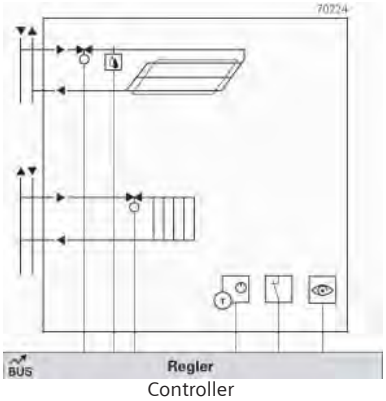

Controller

Common functions
- Window contact, occupancy detector, 4 operating modes

3

RXB applications

RXB hardware
The product range comprises compact controllers, room units for comfortable control as well as room controllers in room housings.
The compact room controllers are optimized to the respective application with regard to input/output configuration and building design type.
HVAC functions are operated via standard room units or controllers in a room housing.
Communication is based on KNX (S-mode). S-mode stands for system mode and is 100% downward compatible with existing EIB environments while serving as a common basis for Konnex.
The fan coil room controllers communication also in LTE mode. LTE mode is used for to communicate with control equipment from the Synco™ 700 product range.

RXB software
Each RXB unit comes with preloaded application software featuring one or several applications (see next page).
The ETS software helps engineer and commission a network with RXB units.
In addition, the Synco™ tool... and room unit QAX34.3 by Siemens can be used for commissioning and parameterization.

Connection to the Desigo building automation and control system
Desigo PX KNX allow for flexibly connecting RXB controllers to the Desigo building automation and control system, and hence acts as a gateway to BACnet.
The connection provides access to other functions such as time schedules and central control of setpoints.
RXB thus fits into the overall expandable modular system, and ensures long-term cost-efficiency.

Integration into Synco™
The Synco™ central control unit RMB795 is used for controlling and monitoring the RBX controllers in a Synco™ system.

HVAC	Chilled ceiling Radiator-type systems		KNX (S- and LTE-Mode)
	Fan coil units	QAX30 QAX31 QAX32 QAX33 QAX34 QAX39 QAX84 QAX90 QAX91 QAX95 QAX96 QAX97 QAX98 AQR2531..	RXB21.1 RXB22.1 RXB24.1 RXB39.1

Room units ← → Compact

Fields of application
The scope of RXB is defined by the preprogrammed application software. The following pages provide an overview of the options and the corresponding devices, divided into different areas of application. The devices are supplied preprogrammed with the applications. The required application can be selected by means of the ETS, Synco™ tool or the Handy tool QAX34.3.

Due to the fact that the applications are predefined, engineering simply involves the definition of a small number of parameters, e. g.:
- ON / OFF or 3-point control of the valves and actuators
- Temperature setpoints
- Manual or automatic fan control

Fan coil systems

Application	Description	Devices
FNC02	2-pipe system with changeover	RXB21.1/FC-10
FNC03	2-pipe system with changeover and electrical reheater	RXB22.1/FC-12
FNC04	4-pipe system	RXB21.1/FC-10
FNC05	4-pipe system with electrical reheater	RXB22.1/FC-12
FNC08	4-pipe system with supply air temperature limitation	RXB21.1/FC-10
FNC10	2-pipe system with changeover and outside air damper	RXB21.1/FC-11
FNC12	4-pipe system with outside damper	RXB21.1/FC-11
FNC18	2-pipe system with change over and radiator	RXB21.1/FC-11
FNC20	4-pipe system with air-side control	RXB21.1/FC-10
FNC02/03/04/08	2-pipe/4-pipe system with EC fan-coil support	RXB39.1/FC13

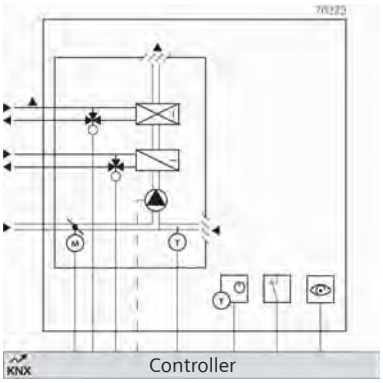

Common functions
- Window contact, occupancy detector, 4 operating modes
- Manual fan control with room unit
- Automatic fan control three-speed, 0..10 V continious speed (with RXB39.1/FC13 only)
- Options for 2-pipe systems: heating only, cooling only or change-over, via KNX bus

Heated/chilled ceilings and radiators

Application	Description	Devices
CLC01	Chilled ceiling with dewpoint monitoring	RXB24.1/CC-02
CLC02	Chilled ceiling with dewpoint monitoring and radiator	RXB24.1/CC-02
RAD01	Radiator with downdraft compensation	RXB24.1/CC-02

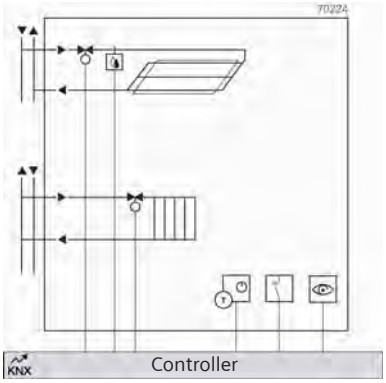

Common functions
- Window contact, occupancy detector, 4 operating modes

3

RXC applications

RXC hardware
RXC is a comprehensive range of room controllers for HVAC automation, extension modules for lighting and blinds, and a graded range of purposedesigned room units. LonWorks technology is used for data communications.
The range consists of compact and modular room controllers, user-friendly room operator units and controllers in room-style housings.

RXC software
Each room controller contains downloadable application software (referred to as the "application") with the optimum control programs for the room or area concerned.
Siemens maintains a comprehensive library of reliable, field-proven applications for HVAC and electrical applications.

Connetion to the Desigo building automation and control system
Extension modules PXX-L.. together with the modular automation stations PXC..D allow for flexibly connecting RXC controllers to the Desigo building automation and control system, and hence acts as a gateway to BACnet. The connection provides access to other functions such as time schedules and central control of setpoints.
RXC thus fits into the overall expandable modular system, and ensures long-term cost-efficiency.

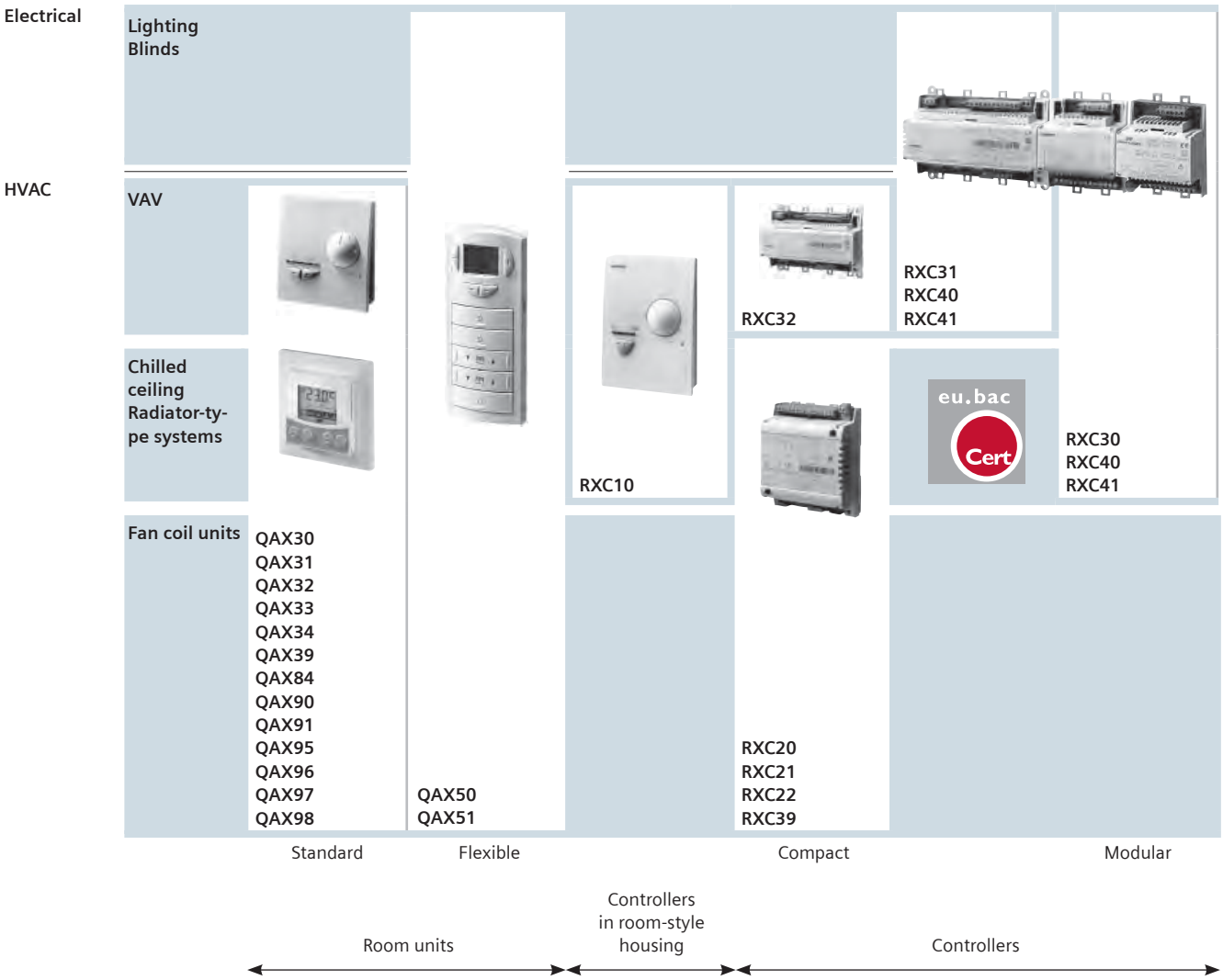

Fields of application
The scope of RXC is defined by the pre-programmed application software. The following pages provide an overview of the options and the corresponding devices, divided into different areas of application. The devices are supplied pre-programmed with the application required. Other applications can be loaded using the RXT10.3 commissioning and service tool, which contains the entire applications library.

Due to the fact that the applications are largely predefined, engineering simply involves the definition of a small number of parameters, e. g.:
- ON / OFF or 3-point control of the valves and actuators
- Temperature setpoints
- Manual or automatic fan control

Basic applications
With the basic application software every RXC controller can also be used as an I/O module. The RXT10.3 commissioning and service tool can be used to observe the signals to the inputs or to process them further at the automation level or at the management station. Direct control of the controller outputs is also possible. Controllers ordered without reference to a specific application will be supplied factory-programmed with the appropriate basic application.

Application	Description
00010	Basic application for RXC10.5
00020	Basic application for RXC20.5
00021	Basic application for RXC21.5
00022	Basic application for RXC22.5
00030	Basic application for RXC30.5
00031	Basic application for RXC31.5
00032	Basic application for RXC32.5

Fan coil systems

Application	Description	Devices
FNC02	2-pipe system with changeover	RXC20.5 / RXC21.5
FNC03	2-pipe system with changeover and electric reheater	RXC20.5 / RXC21.5 / RXC22.5
FNC04	4-pipe system	RXC20.5 / RXC21.5
FNC08	4-pipe system with supply air temperature limitation	RXC21.5
FNC10	2-pipe system with changeover and outside air damper	RXC21.5
FNC12	4-pipe system with outside air damper	RXC21.5
FNC18	2-pipe system (cooling) and radiator	RXC20.5 / RXC21.5
FNC20	4-pipe system with air-side control	RXC20.5 / RXC21.5
FNC02/03/04/08	2-pipe/4-pipe system with EC fan-coil support	RXC39.5

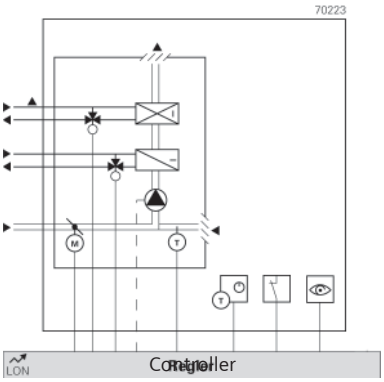

Common functions
- Window contact, occupancy detector, 4 operating modes
- Manual fan control with room unit
- Automatic fan control (RXC20.5 single-speed, RXC21.5, RXC21.5 three-speed), 0..10 V (continious speed with RXC39.5 only)
- Options for 2-pipe systems: heating only, cooling only or change-over, via LonWorks bus

Heated/chilled ceilings and radiators

Application	Description	Devices
CLC01	Chilled ceiling	RXC20.5 / RXC10.5
CLC02	Chilled ceiling and radiator	RXC20.5 / RXC10.5
CLC03	Chilled ceiling and radiator	RXC20.5
CLC06	Chilled/heated ceiling, 2-pipe system with changeover via LonWorks bus	RXC20.5 / RXC10.5
CLC07	Chilled/heated ceiling, 2-pipe system with changeover via LonWorks bus and radiator	RXC20.5
CLC08	Chilled/heated ceiling, 4-pipe system and 2 ON / OFF valves for changeover	RXC21.5
CLC09	Divided chilled/heated ceiling: Cooling only and cooling/ heating with changeover via LonWorks bus	RXC20.5 / RXC21.5
RAD01	LPHW radiators	RXC20.5 / RXC10.5
RAD03	Electric radiators	RXC20.5 / RXC10.5

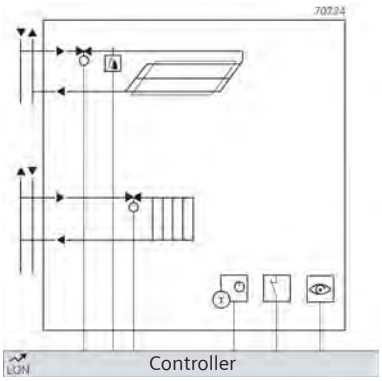

Common functions
- Window contact, occupancy detector, 4 operating modes
- Dewpoint sensor

VAV systems

Application	Description	Devices
VAV01	Single duct supply or extract air system	RXC10.5 / RXC32.5
VAV02	Single duct supply air system with reheater/cooler	RXC32.5
VAV03	Single duct supply air system with electric reheater	RXC32.5
VAV04	Single duct supply and extract air system	RXC31.5
VAV05	Single duct supply and extract air system with reheater/cooler	RXC31.5
VAV06	Single duct supply and extract air system with electric reheater	RXC31.5
VAV07	Single duct supply or extract air system with radiator	RXC10.5
VAV08	Single duct supply and extract air systems with radiator	RXC31.5
VAV10	Single duct supply and extract air system with electric reheater	RXC31.5
VAV14	Single duct supply and extract air systems with radiator/ chilled ceiling	RXC31.5
FPB05	Fan powered single duct supply air system with electric reheater	RXC31.5

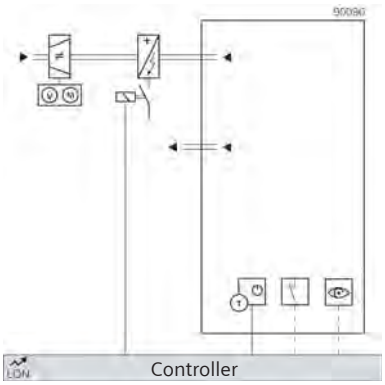

Common functions

- Window contact, occupancy detector, 4 operating modes
- Built-in pressure sensor (RXC32.5)
- DC 0...10 V inputs for external pressure sensors (RXC31.5)
- Control of compact volume controllers with DC 0...10 V (RXC10.5, RXC32.5)
- Direct control of damper actuators (RXC31.5, RXC32.5)

Combined applications

The HVAC applications covered by the RXC30.5 and RXC31.5 basic modules combine lighting and blind control (extension modules RXC40.5 and RXC41.5).
The combined applications consist of an HVAC application with one or more electrical functions.

Applica-tion	HVAC Application	Electrical function			Equipment			
		Group of lights ON / OFF [1]	Group of lights dimmed	Blinds up / down [2]	RXC30.5	RXC31.5	RXC40.5	RXC41.5
INT01	CLC02 [3]	2 x			1			
INT02	CLC02 [3]	4 x			1		1	
INT03	CLC02 [3]	2 x	2 x		1		1	
INT04	CLC02 [3]	2 x		2 x	1			1
INT05	CLC02 [3]	2 x		4 x	1			2
INT06	CLC02 [3]	4 x		2 x	1		1	1
INT07	CLC02 [3]	2 x	2 x	2 x	1		1	1
INT10	VAV08 [4]	2 x				1	1	
INT11	VAV08 [4]	4 x				1	1	1
INT12	VAV08 [4]		2 x			1	1	
INT15	VAV08 [4]	2 x		2 x		1	1	1
INT17	VAV08 [4]			2 x		1		1

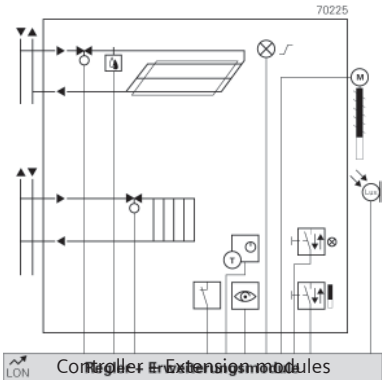

[1] With or without daylight sensor via LonWorks bus, as required

[2] With or without slat adjustment, as required

[3] CLC02: Chilled ceiling and radiator

[4] VAV08: Single duct supply and extract air systems, see VAV systems above

Room controller with bus communication

RXL2..

The controllers RXL2.. are used for temperature control in individual rooms.
- For 2-pipe with changeover or 4-pipe fan coil systems
- Control of thermic valve actuators AC 24 V, PDM, valve and damper actuators AC 24 V (3-position)
- Volt-free relay contacts for fan speed control
- Relay for electric heating (RXL22.1 only)
- Bus communication
- Connetion to Desigo building automation and control system via PX KNX

Application description fan coil: CM110677
Application description RAD/CLC: CM110676

Operating voltage	AC 24 V
Frequency	50/60 Hz
Power consumption	15 VA
Control algorithm	PI
Digital inputs, number	2
Triac outputs	ON/OFF PWM 3-position
Triac output, switching voltage	AC 24 V
Triac output, switching current	0.5 A
Relay output, switching voltage	AC 250 V
Relay output, switching current	5 (4) A
Communication	Bus Room unit: PPS2
Service plug	RXT20.1
Mounting location	Ceiling voids with cover Fan coil Panel
Mounting	On DIN rail With screws
Dimensions (W x H x D)	113 x 167 x 62 mm

Range overview RXL2..

Product Title	Triac outputs, number	Relay outputs, number	Data sheet	Stock No.	Product No.
Room controller for 3-speed fan	4	3	N3877	BPZ:RXL21.1/FC-10	**RXL21.1/FC-10**
Room controller for 3-speed fan	4	3	N3877	BPZ:RXL21.1/FC-11	**RXL21.1/FC-11**
Room controller with 3-speed fan and electric heating coil	2	4	N3877	BPZ:RXL22.1/FC-12	**RXL22.1/FC-12**
Room controller for chilled ceilings and radiators	4	0	N3878	BPZ:RXL24.1/CC-02	**RXL24.1/CC-02**

The application determines the usable actuator (2-position /3-position) with the triac output

Communicative controllers - RXL (Bus)
For fan coil, radiator, chilled ceiling

RXL39.1/FC-13

Communicating room controller for fan-coil applications with proprietary communication

The RXL39.1 room controller is used for temperature control in individual rooms.
- For 2-pipe and 4-pipe fan coil systems with or without changeover
- PI control
- Proprietary bus communication
- Connetion to Desigo building automation and control system via PX KNX
- DC 0...10 V control of valve and damper actuators, fan (ECM), and electric heater
- 2 Potential-free relay contacts to release fan and electric heating
- Commissioning with

Data sheet	N3876
Operating voltage	AC 230 V
Frequency	50/60 Hz
Power consumption	12 VA
Control algorithm	PI
Digital inputs, number	4
Digital outputs, number	0
Analog inputs, number	2
Analog outputs, number	3
Relay output, switching voltage	AC 250 V
Relay output, switching current	5 (4) A
Degree of protection	IP20
Communication	Bus: Proprietär Raumgerät: PPS2
Service plug	ACS, HandyTool
Mounting	On DIN rail
Dimensions (W x H x D)	152 x 120 x 62 mm

Stock No.	Product No.
S55373-C122	**RXL39.1/FC-13**

Accessories for RXL..

Product Title	Data sheet	Stock No.	Product No.
Power amplifier for thermal actuators AC 24 V, PWM	N3591	BPZ:UA1T	**UA1T**
Terminal cover for RXA2../ RXB2../ RXL2../ RXC2..	N3834	BPZ:RXZ20.1	**RXZ20.1**
Terminal cover for RXB3.. / RXL3.. / RXC3..	N3840	BPZ:RXZ30.1	**RXZ30.1**
Power supply unit DC 29 V, 160 mA with additional unchoked output, N 125/02	2.14.4.4	5WG1125-1AB02	**5WG11251AB02**
Power supply unit DC 29 V, 320 mA with additional unchoked output, N 125/12	2.14.4.4	5WG1125-1AB12	**5WG11251AB12**
Power supply unit DC 29 V, 640 mA with additional unchoked output, N 125/22	2.14.4.4	5WG1125-1AB22	**5WG11251AB22**

NEW PRODUCT

Room units for RXL..

Product Title	Data sheet	Stock No.	Product No.
Room unit with sensor and PPS2 interface	N1741	BPZ:QAX30.1	**QAX30.1**
Room unit with sensor, setpoint adjuster and PPS2 interface	N1741	BPZ:QAX31.1	**QAX31.1**
Room unit with sensor, setpoint and operating mode selector and PPS2 interface	N1641	BPZ:QAX32.1	**QAX32.1**
Room unit with sensor, setpoint and operating mode selector, fan speed selection, and PPS2 interface	N1642	BPZ:QAX33.1	**QAX33.1**
Room unit with sensor, setpoint and operating mode selector, display and PPS2 interface	N1645	BPZ:QAX34.1	**QAX34.1**
Room unit with sensor, setpoint and operating mode selector, display and PPS2 interface	N1640	BPZ:QAX34.3	**QAX34.3**
Flush-mounted room unit complete with PPS2 interface and white Siemens frame	N1649	BPZ:QAX84.1/PPS2	**QAX84.1/PPS2**
Wireless room unit with temperature sensor	N1643	BPZ:QAX90.1	**QAX90.1**
Wireless room unit with temperature sensor and setpoint adjuster	N1643	BPZ:QAX91.1	**QAX91.1**
Receiver for wireless room operator units with PPS2 interface	N1644	BPZ:RXZ90.1	**RXZ90.1**
Universal setpoint adjuster with PPS2 interface	N1646	BPZ:QAX39.1	**QAX39.1**

Temperature sensors for RXL..

Product Title	Data sheet	Stock No.	Product No.
Room temperature sensor LG-Ni1000	N1721	BPZ:QAA24	**QAA24**
Front module with passiv temperature measurement, LG-Ni1000	N1408	S55720-S133	AQR2531ANW
Room temperature sensor LG-Ni1000 for mounting on recessed conduit boxes	N1722	BPZ:QAA64	**QAA64**
Cable temperature sensor PVC 2 m, LG-Ni1000	N1831	BPZ:QAP22	**QAP22**
Duct temperature sensor 400 mm, LG-Ni1000	N1761	BPZ:QAM2120.040	**QAM2120.040**

For the complete flush mounting sensor offering including mounting plates and frames, see chapter 6

Dewpoint sensor for RXL..

Product Title	Data sheet	Stock No.	Product No.
Condensation monitor	N1542	BPZ:QXA2000	**QXA2000**
AC 230 V extension module for QXA2000	N1542	BPZ:AQX2000	**AQX2000**

Valve actuators for RXL..

Product Title	Data sheet	Stock No.	Product No.
Electrothermal actuator, AC/DC 24 V, NC, 2P, PDM, PR	N4884	S55174-A115	STA73PR/00
Electrothermal actuator, AC/DC 24 V, NO, 2P, PDM, PR	N4884	S55174-A116	STP73PR/00
Electromotoric actuator, 100 N, 2.5/5 mm, 1.5 m, AC 24 V, 3P	N4893	BPZ:SSA81	**SSA81**
Electromotoric actuator, 200 N, 5.5 mm, AC 24 V, 1.5 m, 3P	N4891	BPZ:SSB81	**SSB81**
Electromotoric actuator, 160 N, 2.5 mm, 1.5 m, AC 24 V, 3P	N4864	BPZ:SSP81	**SSP81**

NEW PRODUCT

Damper actuators for RXL..

Product Title	Data sheet	Stock No.	Product No.
Rotary air damper actuators 5 Nm, without spring return	N4634	BPZ:GDB..1E	**GDB..1E**
Linear air damper actuators 125 N, without spring return	N4664	BPZ:GDB..2E	**GDB..2E**
Rotary air damper actuators 10 Nm, without spring return	N4634	BPZ:GLB..1E	**GLB..1E**
Linear air damper actuators 250 N, without spring return	N4664	BPZ:GLB..2E	**GLB..2E**

Interfaces and tools RXB and RXL

Product Title	Data sheet	Stock No.	Product No.
Service unit with LCD	N3851	BPZ:RXT20.1	**RXT20.1**
Room unit with sensor, setpoint and operating mode selector, display and PPS2 interface	N1640	BPZ:QAX34.3	**QAX34.3**

Room controller with KNX bus communication

RXB2..

The controllers are used for temperature control in individual rooms.
- For 2-pipe with changeover or 4-pipe fan coil systems
- For radiator and chilled ceiling (RXB24.1 only)
- Control of thermal valve actuators AC 24 V, PDM, valve and damper actuators AC 24 V (3-position) as well as KNX bus actuators
- Potential-free relay contacts for fan speed control
- Relay for electric heating (RXB22.1 only)
- KNX bus communication
- Connetion to Desigo building automation and control system via PX KNX

Application description fan coil: CM110672
Application description RAD/CLC: CM110671

Operating voltage	AC 230 V
Frequency	50/60 Hz
Power consumption	Max. 12 VA
Control algorithm	PI
Digital inputs, number	2
Triac outputs	ON/OFF PWM 3-position
Triac output, switching voltage	AC 24 V
Triac output, switching current	0.5 A
Relay output, switching voltage	AC 250 V
Relay output, switching current	5 (4) A
Communication	Bus: KNX (S-mode and LTE mode) Room unit: PPS2
Service plug	RXT20.1
Mounting location	Ceiling voids with cover Fan coil Panel
Mounting	On DIN rail With screws
Dimensions (W x H x D)	113 x 167 x 62 mm

Range overview RXB2..

Product Title	Triac outputs, number	Relay outputs, number	Data sheet	Stock No.	Product No.
Room controller for 3-speed fan	4	3	N3873	BPZ:RXB21.1/FC-10	**RXB21.1/FC-10**
Room controller for 3-speed fan	4	3	N3873	BPZ:RXB21.1/FC-11	**RXB21.1/FC-11**
Room controller with 3-speed fan and electric heating coil	2	4	N3873	BPZ:RXB22.1/FC-12	**RXB22.1/FC-12**
Room controller for chilled ceilings and radiators	4	0	N3874	BPZ:RXB24.1/CC-02	**RXB24.1/CC-02**

The application determines the usable actuator (2-position /3-position) with the triac output

3

RXB39.1/FC-13

Communicating room controller for fan-coil applications with KNX communication

The RXB39.1 room controller is used for temperature control in individual rooms.
- For 2-pipe and 4-pipe fan coil systems with or without changeover
- PI control
- KNX bus communication
- Connetion to Desigo building automation and control system via PX KNX
- DC 0...10 V control of valve and damper actuators, fan (ECM), and electric heater
- 2 Potential-free relay contacts to release fan and electric heating
- Commissioning with ETS Professional, "HandyTool" or Synco ACS
- Operating voltage AC 230 V
- Plug-in screw terminals

Data sheet	N3875
Operating voltage	AC 230 V
Frequency	50/60 Hz
Power consumption	12 VA
Control algorithm	PI
Digital inputs, number	4
Digital outputs, number	0
Analog inputs, number	2
Analog outputs, number	3
Relay output, switching voltage	AC 250 V
Relay output, switching current	5 (4) A
Degree of protection	IP20
Communication	Bus: KNX Room unit: PPS2
Service plug	ETS Professional, ACS, HandyTool
Mounting	On DIN rail
Dimensions (W x H x D)	152 x 120 x 62 mm

	Stock No.	Product No.
	S55373-C121	**RXB39.1/FC-13**

Accessories for RXB..

Product Title	Data sheet	Stock No.	Product No.
Power amplifier for thermal actuators AC 24 V, PWM	N3591	BPZ:UA1T	**UA1T**
Terminal cover for RXA2../ RXB2../ RXL2../ RXC2..	N3834	BPZ:RXZ20.1	**RXZ20.1**
Terminal cover for RXB3.. / RXL3.. / RXC3..	N3840	BPZ:RXZ30.1	**RXZ30.1**
Power supply unit DC 29 V, 160 mA with additional unchoked output, N 125/02	2.14.4.4	5WG1125-1AB02	**5WG11251AB02**
Power supply unit DC 29 V, 320 mA with additional unchoked output, N 125/12	2.14.4.4	5WG1125-1AB12	**5WG11251AB12**
Power supply unit DC 29 V, 640 mA with additional unchoked output, N 125/22	2.14.4.4	5WG1125-1AB22	**5WG11251AB22**

NEW PRODUCT

Room units for RXB..

Product Title	Data sheet	Stock No.	Product No.
Room unit with sensor and PPS2 interface	N1741	BPZ:QAX30.1	**QAX30.1**
Room unit with sensor, setpoint adjuster and PPS2 interface	N1741	BPZ:QAX31.1	**QAX31.1**
Room unit with sensor, setpoint and operating mode selector and PPS2 interface	N1641	BPZ:QAX32.1	**QAX32.1**
Room unit with sensor, setpoint and operating mode selector, fan speed selection, and PPS2 interface	N1642	BPZ:QAX33.1	**QAX33.1**
Room unit with sensor, setpoint and operating mode selector, display and PPS2 interface	N1645	BPZ:QAX34.1	**QAX34.1**
Room unit with sensor, setpoint and operating mode selector, display and PPS2 interface	N1640	BPZ:QAX34.3	**QAX34.3**
Flush-mounted room unit complete with PPS2 interface and white Siemens frame	N1649	BPZ:QAX84.1/PPS2	**QAX84.1/PPS2**
Wireless room unit with temperature sensor	N1643	BPZ:QAX90.1	**QAX90.1**
Wireless room unit with temperature sensor and setpoint adjuster	N1643	BPZ:QAX91.1	**QAX91.1**
Receiver for wireless room operator units with PPS2 interface	N1644	BPZ:RXZ90.1	**RXZ90.1**
Room unit with EnOcean interface, 55 x 55 mm	N1663	S55623-H104	**QAX95.4**
Room unit with EnOcean interface, with setpoint adjuster, 55 x 55 mm	N1663	S55623-H105	**QAX96.4**
Room unit with EnOcean interface, with setpoint adjuster, button and switch, 55 x 55 mm	N1663	S55623-H106	**QAX97.4**
Room unit with EnOcean interface, with setpoint adjuster, button and switch, 55 x 55 mm	N1663	S55623-H107	**QAX98.4**
Radio frequency receiver with Gateway EnOcean/KNX, powered via KNX bus	N1662	S55842-Z101	**RXZ97.1/KNX**
Universal setpoint adjuster with PPS2 interface	N1646	BPZ:QAX39.1	**QAX39.1**

Temperature sensors for RXB..

Product Title	Data sheet	Stock No.	Product No.
Room temperature sensor LG-Ni1000	N1721	BPZ:QAA24	**QAA24**
Front module with passiv temperature measurement, LG-Ni1000	N1408	S55720-S133	**AQR2531ANW**
Room temperature sensor LG-Ni1000 for mounting on recessed conduit boxes	N1722	BPZ:QAA64	**QAA64**
Cable temperature sensor PVC 2 m, LG-Ni1000	N1831	BPZ:QAP22	**QAP22**
Duct temperature sensor 400 mm, LG-Ni1000	N1761	BPZ:QAM2120.040	**QAM2120.040**

For the complete flush mounting sensor offering including mounting plates and frames, see chapter 6

Dewpoint sensors for RXB..

Product Title	Data sheet	Stock No.	Product No.
Condensation monitor	N1542	BPZ:QXA2000	**QXA2000**
AC 230 V extension module for QXA2000	N1542	BPZ:AQX2000	**AQX2000**

NEW PRODUCT

Valve actuators for RXB..

Product Title	Data sheet	Stock No.	Product No.
Electrothermal actuator, AC/DC 24 V, NC, 2P, PDM, PR	N4884	S55174-A115	STA73PR/00
Electrothermal actuator, AC/DC 24 V, NO, 2P, PDM, PR	N4884	S55174-A116	STP73PR/00
Electromotoric actuator, 100 N, 2.5/5 mm, 1.5 m, AC 24 V, 3P	N4893	BPZ:SSA81	**SSA81**
Electromotoric actuator, 200 N, 5.5 mm, AC 24 V, 1.5 m, 3P	N4891	BPZ:SSB81	**SSB81**
Electromotoric actuator, 160 N, 2.5 mm, 1.5 m, AC 24 V, 3P	N4864	BPZ:SSP81	**SSP81**

Damper actuators for RXB..

Product Title	Data sheet	Stock No.	Product No.
Rotary air damper actuators 5 Nm, without spring return	N4634	BPZ:GDB..1E	**GDB..1E**
Linear air damper actuators 125 N, without spring return	N4664	BPZ:GDB..2E	**GDB..2E**
Rotary air damper actuators 10 Nm, without spring return	N4634	BPZ:GLB..1E	**GLB..1E**
Linear air damper actuators 250 N, without spring return	N4664	BPZ:GLB..2E	**GLB..2E**

Interfaces and tools RXB and RXL

Product Title	Data sheet	Stock No.	Product No.
Service unit with LCD	N3851	BPZ:RXT20.1	**RXT20.1**
Room unit with sensor, setpoint and operating mode selector, display and PPS2 interface	N1640	BPZ:QAX34.3	**QAX34.3**

Central control unit RMB795B for RXB/RXL room controllers and room thermostats RDG/RDF/RDU

RMB795B..

- Central control unit with integrated control and supervisory functions for individual room control with RXB and RXL room controllers and room thermostats RDG/RDF/RDU
- Individual time programs for room groups with RXB/RXL room controllers and room thermostats RDG/RDF/RDU
- Preselected operating modes and setpoints, minimum / maximum temperature supervision and supervision of RXB/RXL room controllers and room thermostats RDG/RDF/RDU
- Operation and monitoring of individual RXB/RXL room controllers
- Trend and fault reporting functions for the input variables temperature, relative / absolute humidity, pressure / differential pressure, volumetric air flow, indoor air quality, etc.
- Heating / cooling changeover function for operation with 2-pipe systems
- Flexible configuration
- Functionality can be extended (extension modules)
- Clear-text operation with separate operator unit (plug-in type or detached)
- Integrated KNX bus communication
- No commissioning tool required

Extension modules complement the RMB795B central control unit and offer extra functions. The extension modules are attached to the RMB795B central control unit. Full operation from commissioning to enduser operation via operator unit.

Available extension modules:
- max. 1 universal module RMZ785
- max. 2 universal modules RMZ787

Available operator units:
- Plug-in type operator unit RMZ790
- Detached operator unit RMZ791

Data sheet	N3122
Operating voltage	AC 24 V
Frequency	50/60 Hz
Power consumption	12 VA
Universal inputs, number	6
Universal input, signal	0...1000 Ohm 1000...1175 Ohm 2 x LG-Ni1000 DC 0...10 V Potential-free digital status contact LG-Ni1000 Pt1000 T1 (PTC)
Analog outputs, number	2
Analog output, signal	DC 0...10 V
Analog output, current	Max. 1 mA
Relay outputs	Potential-free switching contact
Relay outputs, number	4
Relay output, switching voltage	AC 19...250 V
Relay output, switching current	4 (3) A
Communication	KNX (KNX TP1)

Range overview RMB795B..

Product Title	Stock No.	Product No.
Central control unit RMB795B-1 with languages de, fr, it, es, pt	S55370-C162	RMB795B-1
Central control unit RMB795B-2 with languages de, fr, nl, en	S55370-C163	RMB795B-2
Central control unit RMB795B-3 with languages da, fi, no, sv	S55370-C164	RMB795B-3
Central control unit RMB795B-4 with languages cs, sk, pl, hu, ru, bg	S55370-C165	RMB795B-4
Central control unit RMB795B-5 with languages ro, sl, sr, hr, el, tr	S55370-C166	RMB795B-5
Central control unit RMB795B-6 with language zh	S55370-C167	RMB795B-6

Operator units for RMB..

Product Title	Data sheet	Stock No.	Product No.
Plug-in type operator unit	N3111	BPZ:RMZ790	**RMZ790**
Detached operator unit with 3 m cable	N3112	BPZ:RMZ791	**RMZ791**

Extension modules for RMB..

Product Title	Data sheet	Stock No.	Product No.
Universal module (8UI)	N3146	BPZ:RMZ785	**RMZ785**
Universal module (4UI, 4DO)	N3146	BPZ:RMZ787	**RMZ787**
Module connector	N3138	BPZ:RMZ780	**RMZ780**

Radiator, chilled ceilings and VAV room controllers with LonWorks communication

RXC10.5/..

The RXC10.5 controller is used for temperature control in individual rooms.
- For chilled ceilings and radiators
- VAV
- PID control
- Loadable application software
- LonMark-compatible bus communications
- Connection to Desigo building automation and control system
- Control of thermal valve actuators, AC 24 V, PDM*
- Operating voltage AC 24 V

* PDM = pulse duration modulation

Data sheet	N3830
Operating voltage	AC 24 V
Frequency	50/60 Hz
Power consumption	2 VA
Control algorithm	PI
Digital inputs, number	2
Position feedback	DC 0...10 V
Triac outputs, number	2
Triac outputs	ON/OFF
Triac output, switching voltage	AC 24 V
Triac output, switching current	0.5 A
Communication	Bus: LonWorks
Service plug	RXT10.., RXT20.1
Mounting location	In room
Dimensions (W x H x D)	92 x 126 x 40 mm

Range overview RXC10.5/..

Product Title	Stock No.	Product No.
Radiator, chilled ceilings and VAV room controller with LonWorks communication and basic application OOO10	S55373-C110	**RXC10.5/00010**

The application determines the usable actuator (2-position /3-position) with the triac output

Accessories for RXC1..

Product Title	Data sheet	Stock No.	Product No.
Power amplifier for thermal actuators AC 24 V, PWM	N3591	BPZ:UA1T	**UA1T**

Communicative controllers - RXC (LonWorks)
For fan coil, radiator, chilled ceiling

RXC20/21/22..

Room controller with LonWorks communication

The RXC20.., RXC21.. and RXC22.. controllers are used for temperature control in individual rooms.
- For 2- or 4-pipe fan coil systems with or without changeover
- For chilled ceilings and radiators
- Control of thermic valve actuators AC 24 V, PDM, valve and damper actuators AC 24 V (3-position) or electric air heater units
- Volt-free relay contacts for fan speed control
- Connection to Desigo building automation and control system
- LonMark-compatible bus communication
- Plug-in screw terminal

Application description: CA110300

Data sheet	N3834
Operating voltage	AC 230 V
Frequency	50/60 Hz
Power consumption	12 VA
Control algorithm	PI
Digital inputs, number	2
Triac outputs	ON/OFF
Triac output, switching voltage	AC 24 V
Triac output, switching current	0.5 A
Relay output, switching voltage	AC 250 V
Relay output, switching current	5 (4) A
Communication	Bus: LonWorks Room unit: PPS2
Service plug	RXT10.3, RXT20.1
Mounting location	Ceiling voids with cover Fan coil Panel
Mounting	On DIN rail With screws
Dimensions (W x H x D)	113 x 167 x 62 mm

Range overview RXC20/21/22..

Product Title	Triac outputs, number	Relay outputs, number	Electric reheater relay	Stock No.	Product No.
Room controller for fan coils with 1-speed fan or chilled ceiling/radiator with basic application OOO20	2	1	0	S55373-C111	**RXC20.5/00020**
Room controller for fan coils with 3-speed fan and/or outside air damper with basic application OOO21	4	3	0	S55373-C112	**RXC21.5/00021**
Room controller for fan coils with 3-speed fan and electric reheater with basic application OOO22	2	4	1	S55373-C113	**RXC22.5/00022**

The application determines the usable actuator (2-position/3-position) with the triac output

Accessories for RXC2..

Product Title	Data sheet	Stock No.	Product No.
Terminal cover for RXA2../ RXB2../ RXL2../ RXC2..	N3834	BPZ:RXZ20.1	**RXZ20.1**
Power amplifier for thermal actuators AC 24 V, PWM	N3591	BPZ:UA1T	**UA1T**

Communicating room controller, with LonMark compatible bus communication

RXC39.5/00039

The RXC39.5 room controller is used for temperature control in individual rooms.
- For fan coil systems with continuous (ECM) fan
- Downloadable application software
- LonMark-compatible bus communication
- Connection to Desigo building automation and control system
- DC 0...10 V control of valve and damper actuators, fan, and electric heater
- Commissioning with RXT10 or standard LonWorks tool
- Operating voltage AC 24 V
- Plug-in screw terminals

Data sheet	N3856
Operating voltage	AC 24 V
Frequency	50/60 Hz
Power consumption	33 VA
Control algorithm	PI
Digital inputs, number	4
Digital outputs, number	0
Analog inputs, number	1
Analog outputs, number	4
Triac outputs	ON/OFF
Triac output, switching voltage	AC 24 V
Triac output, switching current	0.5 A
Relay output, switching voltage	AC 250 V
Relay output, switching current	2 (2) A
Communication	Bus: LonWorks Room unit: PPS2
Service plug	RXT10; Standard-LonWorks-Tool
Mounting location	Ceiling voids with cover Fan coil Panel
Mounting	On DIN rail
Dimensions (W x H x D)	152 x 120 x 62 mm

	Stock No.	Product No.
	S55373-C118	**RXC39.5/00039**

Accessories for RXC39..

Product Title	Data sheet	Stock No.	Product No.
Terminal cover for RXB3.. / RXL3.. / RXC3..	N3840	BPZ:RXZ30.1	**RXZ30.1**
Power amplifier for thermal actuators AC 24 V, PWM	N3591	BPZ:UA1T	**UA1T**

Communicative controllers - RXC (LonWorks)
For radiator, chilled ceiling and light

RXC30.5/..

Radiators, chilled ceilings, lighting, base module with LonWorks communication

The controllers are used for temperature and lighting control in individual rooms.
- PID control of chilled ceilings and radiators
- Extension modules for control of lighting and blinds
- Connection to Desigo building automation and control system
- LonMark-compatible bus communication
- Control of 2 thermic valve actuators AC 24 V (PDM) or 1 motorized valve actuator AC 24 V (3-position)
- Volt-free relay contacts for lighting control (16 A)
- Plug-in screw terminal

Data sheet	N3840
Operating voltage	AC 230 V
Frequency	50/60 Hz
Power consumption	12 VA
Control algorithm	PI
Digital input, application	HVAC Light
Triac outputs	HVAC: ON/OFF
Triac output, switching voltage	AC 24 V
Triac output, switching current	0.5 A
Relay output, switching voltage	AC 250 V
Relay output, switching current	16 (12) A
Communication	Bus: LonWorks Room unit: PPS2
Service plug	RXT10.3, RXT20.1
Mounting location	Ceiling voids with cover Panel
Mounting	On DIN rail With screws
Dimensions (W x H x D)	152 x 120 x 62 mm

Range overview RXC30.5/..

Product Title	Stock No.	Product No.
Radiators, chilled ceilings, lighting, base module with LonWorks communication, basic application 00030	S55373-C114	**RXC30.5/00030**

The application determines the usable actuator (2-position /3-position) with the triac output

Extension modules and accessories for RXC30..

Product Title	Data sheet	Stock No.	Product No.
Extension module for lighting control	N3842	S55373-C119	**RXC40.5**
Extension module for blinds control	N3843	S55373-C120	**RXC41.5**
Terminal cover for RXB3.. / RXL3.. / RXC3..	N3840	BPZ:RXZ30.1	**RXZ30.1**
Power amplifier for thermal actuators AC 24 V, PWM	N3591	BPZ:UA1T	**UA1T**

VAV base module with LonWorks communication

RXC31.5/..

The RXC31.5 controller is used for VAV room temperature control in individual rooms.
- Control of supply and extract air, with volume control dampers or additional VAV compact controllers, with or without reheater
- Can be combined with extension modules for control of lighting and blinds
- Downloadable application software
- LonMark-compatible bus communication
- Connection to Desigo building automation and control system
- Control of damper actuators with AC 24 V, 3-position or DC 0...10 V positioning signal
- Control of VAV compact controllers (with differential pressure sensor, volumetric flow controller and actuator) with DC 0...10 V signal
- Control of electric or LPHW reheaters with AC 24 V or AC 24 V 3-position signals
- Operating voltage AC 24 V
- Plug-in screw terminal

Data sheet	N3844
Operating voltage	AC 24 V
Frequency	50/60 Hz
Power consumption	33 VA
Control algorithm	PI
Digital inputs, number	3
Analog inputs, number	3
Triac outputs	ON/OFF
Position feedback	DC 0...10 V
Mounting	On DIN rail With screws
Communication	Bus: LonWorks Room unit: PPS2
Service plug	RXT10.3, RXT20.1
Mounting location	Ceiling voids with cover Panel VAV box
Dimensions (W x H x D)	152 x 120 x 62 mm

Range overview RXC31.5/..

Product Title	Stock No.	Product No.
VAV base module with LonWorks communication, basic application 00031	S55373-C115	**RXC31.5/00031**

The application determines the usable actuator (2-position /3-position) with the triac output

Accessories for RXC31..

Product Title	Data sheet	Stock No.	Product No.
Extension module for lighting control	N3842	S55373-C119	**RXC40.5**
Extension module for blinds control	N3843	S55373-C120	**RXC41.5**
Terminal cover for RXB3.. / RXL3.. / RXC3..	N3840	BPZ:RXZ30.1	**RXZ30.1**
Power amplifier for thermal actuators AC 24 V, PWM	N3591	BPZ:UA1T	**UA1T**

3

RXC32.5/..

VAV room controller with LonWorks communication

The RXC32.5 controller is used for VAV room temperature control in individual rooms.
- Control of the supply or extract air with volume control dampers, with or without reheater
- Downloadable application software
- LonMark-compatible bus communication
- Connetion to Desigo building automation and control system
- Control of damper actuators with AC 24 V, 3-position positioning signal
- Control of electric or LPHW reheaters with AC 24 V or AC 24 V 3-position signals
- Built-in air flow sensor
- Operating voltage AC 24 V
- Plug-in screw terminal

Data sheet	N3845
Operating voltage	AC 24 V
Frequency	50/60 Hz
Power consumption	33 VA
Control algorithm	PI
Digital inputs, number	2
Triac outputs	ON/OFF
Triac output, switching voltage	AC 24 V
Triac output, switching current	0.5 A
Communication	Bus: LonWorks Room unit: PPS2
Service plug	RXT10.3, RXT20.1
Mounting location	Ceiling voids with cover Panel VAV box
Mounting	On DIN rail With screws
Dimensions (W x H x D)	152 x 120 x 62 mm

Range overview RXC32.5/..

Product Title	Stock No.	Product No.
VAV room controller with LonWorks communication, basic application 00032	S55373-C116	**RXC32.5/00032**

The application determines the usable actuator (2-position /3-position) with the triac output

Accessories for RXC32..

Product Title	Data sheet	Stock No.	Product No.
Terminal cover for RXB3.. / RXL3.. / RXC3..	N3840	BPZ:RXZ30.1	**RXZ30.1**
Power amplifier for thermal actuators AC 24 V, PWM	N3591	BPZ:UA1T	**UA1T**

Extension module for lighting control — RXC40.5

- Switching and dimming of 2 groups of lights

Data sheet	N3842
Voltage supply	From base module
Digital inputs, number	4
Relay output, switching voltage	AC 250 V
Relay output, switching current	12 (12) A
Analog outputs, number	2
Interface for base module	PE-bus for RXC3..
Mounting location	Ceiling voids with cover Panel
Mounting	On DIN rail
Dimensions (W x H x D)	80 x 120 x 62 mm

	Stock No.	Product No.
	S55373-C119	**RXC40.5**

Extension module for blinds control — RXC41.5

- Control of 2 electric motors for blinds

Data sheet	N3843
Voltage supply	From base module
Digital inputs, number	4
Relay output, switching voltage	AC 250 V
Relay output, switching current	3 (3) A
Interface for base module	PE-bus for RXC3..
Mounting location	Ceiling voids with cover Panel
Mounting	On DIN rail
Dimensions (W x H x D)	80 x 120 x 62 mm

	Stock No.	Product No.
	S55373-C120	**RXC41.5**

Accessories for RXC40.. and RXC41..

Product Title	Data sheet	Stock No.	Product No.
Terminal cover for RXC4.. and AQX2000	N3842	BPZ:RXZ40.1	**RXZ40.1**

Connection to Desigo

Product Title	Data sheet	Stock No.	Product No.
System controller BACnet/LonTalk	N9222	BPZ:PXC00.D	**PXC00.D**
System controller BACnet/IP	N9222	BPZ:PXC00-E.D	**PXC00-E.D**
Automation station BACnet/LonTalk, with up to 52 data points	N9222	S55372-C109	PXC50.D
Automation station BACnet/IP, with up to 52 data points	N9222	S55372-C110	PXC50-E.D
Automation station BACnet/LonTalk, with up to 200 data points	N9222	BPZ:PXC100.D	**PXC100.D**
Automation station BACnet/IP, with up to 200 data points	N9222	BPZ:PXC100-E.D	**PXC100-E.D**
Automation station BACnet/LonTalk, with more than 200 data points	N9222	BPZ:PXC200.D	**PXC200.D**
Automation station BACnet/IP, with more than 200 data points	N9222	BPZ:PXC200-E.D	**PXC200-E.D**

NEW PRODUCT

Room units for RXC..

Product Title	Data sheet	Stock No.	Product No.
Room unit with sensor and PPS2 interface	N1741	BPZ:QAX30.1	**QAX30.1**
Room unit with sensor, setpoint adjuster and PPS2 interface	N1741	BPZ:QAX31.1	**QAX31.1**
Room unit with sensor, setpoint and operating mode selector and PPS2 interface	N1641	BPZ:QAX32.1	**QAX32.1**
Room unit with sensor, setpoint and operating mode selector, fan speed selection, and PPS2 interface	N1642	BPZ:QAX33.1	**QAX33.1**
Room unit with sensor, setpoint and operating mode selector, display and PPS2 interface	N1645	BPZ:QAX34.1	**QAX34.1**
Room unit with sensor, setpoint and operating mode selector, display and PPS2 interface	N1640	BPZ:QAX34.3	**QAX34.3**
Flush-mounted room unit complete with PPS2 interface and white Siemens frame	N1649	BPZ:QAX84.1/PPS2	**QAX84.1/PPS2**
Wireless room unit with temperature sensor	N1643	BPZ:QAX90.1	**QAX90.1**
Wireless room unit with temperature sensor and setpoint adjuster	N1643	BPZ:QAX91.1	**QAX91.1**
Receiver for wireless room operator units with PPS2 interface	N1644	BPZ:RXZ90.1	**RXZ90.1**
Versatile room unit with LonWorks interface, lighting systems (on / off)	N1648	S55623-H114	**QAX50.5/C000**
Versatile room unit with LonWorks interface, lighting systems (dimmed)	N1648	S55623-H115	**QAX51.5/C000**
Room unit with EnOcean interface, 55 x 55 mm	N1663	S55623-H104	**QAX95.4**
Room unit with EnOcean interface, with setpoint adjuster, 55 x 55 mm	N1663	S55623-H105	**QAX96.4**
Room unit with EnOcean interface, with setpoint adjuster, button and switch, 55 x 55 mm	N1663	S55623-H106	**QAX97.4**
Room unit with EnOcean interface, with setpoint adjuster, button and switch, 55 x 55 mm	N1663	S55623-H107	**QAX98.4**
Radio frequency receiver with Gateway EnOcean/LonWorks, AC / DC 24 V, external antenna	N1661	S55842-Z100	**RXZ95.1/LON**
Universal setpoint adjuster with PPS2 interface	N1646	BPZ:QAX39.1	**QAX39.1**

Temperature sensors for RXC..

Product Title	Data sheet	Stock No.	Product No.
Room temperature sensor LG-Ni1000	N1721	BPZ:QAA24	**QAA24**
Front module with passiv temperature measurement, LG-Ni1000	N1408	S55720-S133	**AQR2531ANW**
Room temperature sensor LG-Ni1000 for mounting on recessed conduit boxes	N1722	BPZ:QAA64	**QAA64**
Duct temperature sensor 400 mm, LG-Ni1000	N1761	BPZ:QAM2120.040	**QAM2120.040**
Cable temperature sensor PVC 2 m, LG-Ni1000	N1831	BPZ:QAP22	**QAP22**

For the complete flush mounting sensor offering including mounting plates and frames, see chapter 6

Indoor air quality sensors for RXC..

Product Title	Data sheet	Stock No.	Product No.
Room air quality sensor CO_2 / temperature / rel. Humidity / VOC	N1961	BPZ:QPA20..	**QPA..**
Base modules with integrated CO_2 and VOC measurement	N1410	BPZ:AQR2548..	**AQR2548..**
Duct air quality sensor CO_2/ temperature / rel. Humidity / VOC	N1962	BPZ:QPM21..	**QPM..**

For the complete flush mounting sensor offering including mounting plates and frames, see chapter 6

Dewpoint sensors for RXC..

Product Title	Data sheet	Stock No.	Product No.
Condensation monitor	N1542	BPZ:QXA2000	**QXA2000**
AC 230 V extension module for QXA2000	N1542	BPZ:AQX2000	**AQX2000**

Differential pressure sensors for RXC..

Product Title	Data sheet	Stock No.	Product No.
Air duct differential pressure sensor, DC 0...10 V	N1916	BPZ:QBM65..	**QBM65..**
Differential pressure sensor, DC 0...10 V	N1910	BPZ:QBM66..	**QBM66..**
Air duct differential pressure sensor with calibration certificate	N1919	BPZ:QBM65-../C	**QBM65-../C**

Valve actuators for RXC..

Product Title	Data sheet	Stock No.	Product No.
Electrothermal actuator, AC/DC 24 V, NC, 2P, PDM, PR	N4884	S55174-A115	**STA73PR/00**
Electrothermal actuator, AC/DC 24 V, NO, 2P, PDM, PR	N4884	S55174-A116	**STP73PR/00**
Electromotoric actuator, 100 N, 2.5/5 mm, 1.5 m, AC 24 V, 3P	N4893	BPZ:SSA81	**SSA81**
Electromotoric actuator, 200 N, 5.5 mm, AC 24 V, 1.5 m, 3P	N4891	BPZ:SSB81	**SSB81**
Electromotoric actuator, 160 N, 2.5 mm, 1.5 m, AC 24 V, 3P	N4864	BPZ:SSP81	**SSP81**

Damper actuators for RXC..

Product Title	Data sheet	Stock No.	Product No.
Rotary air damper actuators 5 Nm, without spring return	N4634	BPZ:GDB..1E	**GDB..1E**
Linear air damper actuators 125 N, without spring return	N4664	BPZ:GDB..2E	**GDB..2E**
Rotary air damper actuators 10 Nm, without spring return	N4634	BPZ:GLB..1E	**GLB..1E**
Linear air damper actuators 250 N, without spring return	N4664	BPZ:GLB..2E	**GLB..2E**

Service units

Product Title	Data sheet	Stock No.	Product No.
Service unit with LCD	N3851	BPZ:RXT20.1	**RXT20.1**

NEW PRODUCT

QAX3..

Room unit with PPS2 interface

Room units for acquiring the room temperature and operation of individual room control.

Power consumption	0.10 VA
Interface for controller	PPS2
Interface for service	LonWorks and PPS2 on RJ45
Sensing element, temperature	NTC
Measuring range, temperature	0...40 °C
Time constant	≤8 min
Measurement accuracy	±0.25 K at 25 °C ±0.5 K at 5...30 °C
Setpoint readjustment range	±12 K
Degree of protection	IP30
Mounting location	Indoors
Mounting	Directly on wall In recessed or top-mounted conduit box

QAX30.1

Room unit with sensor and PPS2 interface

- Acquisition of room temperature

Data sheet	N1741
Voltage supply	PPS2
Dimensions (W x H x D)	90 x 100 x 32 mm

Stock No.	Product No.
BPZ:QAX30.1	**QAX30.1**

QAX31.1

Room unit with sensor, setpoint adjuster and PPS2 interface

- Acquisition of room temperature
- Setpoint adjuster for room temperature

Data sheet	N1741
Dimensions (W x H x D)	90 x 100 x 36 mm

Stock No.	Product No.
BPZ:QAX31.1	**QAX31.1**

QAX32.1

Room unit with sensor, setpoint and operating mode selector and PPS2 interface

- Acquisition of room temperature
- Setpoint adjuster for room temperature
- Rocker switch for mode selection (Off / Auto)

Data sheet	N1641
Dimensions (W x H x D)	90 x 100 x 36 mm

Stock No.	Product No.
BPZ:QAX32.1	**QAX32.1**

Room unit with sensor, setpoint and operating mode selector, fan speed selection, and PPS2 interface — QAX33.1

- Acquisition of room temperature
- Setpoint adjuster for room temperature
- Rocker switch for mode selection (Off/Auto) and for manual fan control with fan coil systems (up to 3 speeds)

Data sheet N1642

Dimensions (W x H x D) 90 x 100 x 36 mm

	Stock No.	Product No.
	BPZ:QAX33.1	**QAX33.1**

Room unit with sensor, setpoint and operating mode selector, display and PPS2 interface — QAX34.1

- Acquisition of room temperature
- Rocker switch for adjustment of room temperature setpoint
- Rocker switch for mode selection (Off/Auto) and for manual fan control with fan coil systems (up to 3 speeds)
- LCD with display of room temperature and control mode

Data sheet N1645

Dimensions (W x H x D) 90 x 100 x 36 mm

	Stock No.	Product No.
	BPZ:QAX34.1	**QAX34.1**

Room unit with sensor, setpoint and operating mode selector, display and PPS2 interface — QAX34.3

- Acquisition of room temperature
- Rocker switch for adjustment of room temperature setpoint
- Rocker switch for mode selection (Off/Auto) and for manual fan control with fan coil systems (up to 3 speeds)
- LCD with display of room temperature and control mode
- Together with the new RXB and RXL controllers for parameter setting

Data sheet N1640

Dimensions (W x H x D) 96 x 119 x 24 mm

	Stock No.	Product No.
	BPZ:QAX34.3	**QAX34.3**

Universal setpoint adjuster with PPS2 interface — QAX39.1

- Setpoint adjuster for room temperature

Data sheet N1646

Dimensions (W x H x D) 48 x 48 x 15 mm

	Stock No.	Product No.
	BPZ:QAX39.1	**QAX39.1**

3

QAX84.1/PPS2

Flush-mounted room unit complete with PPS2 interface and white Siemens frame

The flush-mounted room unit QAX84.1/PPS2 consists of QAZ84.1 as front end, RXZ80.1/PPS2 as bus coupling unit and Siemens DELTA-i bezel in titanium white. The functionality is the same as QAX34.1:
- Acquisition of room temperature
- Rocker switch for adjustment of room temperature setpoint
- Rocker switch for mode selection (Off/Auto) and for manual fan control with fan coil systems (up to 3 speeds)
- LCD with display of room temperature and control mode

Data sheet	N1649
Voltage supply	PPS2
Measuring range, temperature	0...40 °C
Sensing element, temperature	NTC
Degree of protection	IP30
Dimensions (W x H x D)	80 x 80 x 30.5 mm
Mounting	Flush or wall-mounted conduit box

Stock No.	Product No.
BPZ:QAX84.1/PPS2	**QAX84.1/PPS2**

Wireless room unit with temperature sensor QAX90.1

The wireless room unit is used to measure the room temperature.
- for use with Desigo RX room controller in conjunction with the RXZ90.1 receiver
- wireless transmission of the room temperature

Data sheet	N1643
Voltage supply	Mignon (2xAA)
Operating voltage	3 V
Sensing element, temperature	NTC
Measuring range, temperature	0...40 °C
Measurement accuracy	At 25 °C: ±0.25 K At 5...30: ±0.5 K
Degree of protection	IP30
Dimensions (W x H x D)	90 x 100 x 32 mm
Weight	0.07 kg

Stock No.	Product No.
BPZ:QAX90.1	**QAX90.1**

Wireless room unit with temperature sensor and setpoint adjuster QAX91.1

The wireless room unit is used to measure the room temperature and for adjustment of the room temperature setpoint.
- for use with Desigo RX room controller in conjunction with the RXZ90.1 receiver
- wireless transmission of the room temperature

Data sheet	N1643
Voltage supply	Mignon (2xAA)
Operating voltage	3 V
Sensing element, temperature	NTC
Measuring range, temperature	0...40 °C
Time constant	≤8 min
Measurement accuracy	At 25 °C: ±0.25 K At 5...30: ±0.5 K
Setpoint readjustment range	±12 K
Degree of protection	IP30
Dimensions (W x H x D)	90 x 100 x 36 mm
Weight	0.17 kg

Stock No.	Product No.
BPZ:QAX91.1	**QAX91.1**

3

RXZ90.1

Receiver for wireless room operator units with PPS2 interface

For use with Desigo RX room controller in conjunction with wireless room units QAX90.1 and QAX91.1 for transmission of the room temperature in the 868 MHz frequency band.

Data sheet	N1644
Operating voltage	DC 12...15 V
Power consumption	0.12 VA
Ambient temperature, operation	0...50 °C
Ambient temperature, storage	-25...70 °C
Ambient humidity, operation	<85 % r.h.
Voltage supply	PPS2
Degree of protection	IP30
Dimensions (W x H x D)	90 x 100 x 32 mm
Weight	0.13 kg

Stock No.	Product No.
BPZ:RXZ90.1	**RXZ90.1**

Room unit with EnOcean interface, 55 x 55 mm — QAX95.4

- Acquisition of the room temperature
- Powered by solar cell
- A gateway is mandatory (EnOcean / LON or EnOcean / KNX)
- Optional use of battery if light conditions are insufficient
- can be combined with DELTA miro and DELTA line

For use with units from the following product ranges:
- RXC and TRA (together with gateway EnOcean/LonWorks, RXZ95.1/LON)
- RXB (together with gateway EnOcean/KNX, RXZ97.1/KNX)
- Devices with KNX or LonWorks® Communication

Data sheet	N1663
Voltage supply	Solar cell
Measuring range, temperature	0...50 °C
Measurement accuracy	±0.4 K
Time constant	≤16 min
Degree of protection	IP30
Dimensions (W x H x D)	55 x 55 x 19 mm
Weight	0.05 kg

Stock No.	Product No.
S55623-H104	**QAX95.4**

Room unit with EnOcean interface, with setpoint adjuster, 55 x 55 mm — QAX96.4

- Acquisition of the room temperature
- Room temperature setpoint adjustment
- Powered by solar cell
- A gateway is mandatory (EnOcean / LON or EnOcean / KNX)
- Optional use of battery if light conditions are insufficient
- can be combined with DELTA miro and DELTA line

For use with units from the following product ranges:
- RXC and TRA (together with gateway EnOcean/LonWorks, RXZ95.1/LON)
- RXB (together with gateway EnOcean/KNX, RXZ97.1/KNX)
- Devices with KNX or LonWorks® Communication

Data sheet	N1663
Voltage supply	Solar cell
Measuring range, temperature	0...50 °C
Measurement accuracy	±0.4 K
Time constant	≤16 min
Setpoint readjustment range	±10 K
Degree of protection	IP30
Dimensions (W x H x D)	55 x 55 x 28 mm
Weight	0.05 kg

Stock No.	Product No.
S55623-H105	**QAX96.4**

3

QAX97.4

Room unit with EnOcean interface, with setpoint adjuster, button and switch, 55 x 55 mm

- Acquisition of the room temperature
- Room temperature setpoint adjustment
- Freely-programmable button
- Step switch (2 stages)
- Powered by solar cell
- A gateway is mandatory (EnOcean / LON or EnOcean / KNX
- Optional use of battery if light conditions are insufficient
- can be combined with DELTA miro and DELTA line

For use with units from the following product ranges:
- RXC and TRA (together with gateway EnOcean/LonWorks, RXZ95.1/LON)
- RXB (together with gateway EnOcean/KNX, RXZ97.1/KNX)
- Devices with KNX or LonWorks® Communication

Data sheet	N1663
Voltage supply	Solar cell
Measuring range, temperature	0...50 °C
Measurement accuracy	±0.4 K
Time constant	≤16 min
Setpoint readjustment range	±10 K
Degree of protection	IP30
Dimensions (W x H x D)	55 x 55 x 28 mm
Weight	0.05 kg

Stock No.	Product No.
S55623-H106	**QAX97.4**

QAX98.4

Room unit with EnOcean interface, with setpoint adjuster, button and switch, 55 x 55 mm

- Acquisition of the room temperature
- Room temperature setpoint adjustment
- Freely-programmable button
- Step switch (5 stages)
- Powered by solar cell
- A gateway is mandatory (EnOcean / LON or EnOcean / KNX
- Optional use of battery if light conditions are insufficient
- can be combined with DELTA miro and DELTA line

For use with units from the following product ranges:
- RXC and TRA (together with gateway EnOcean/LonWorks, RXZ95.1/LON)
- RXB (together with gateway EnOcean/KNX, RXZ97.1/KNX)
- Devices with KNX or LonWorks® Communication

Data sheet	N1663
Voltage supply	Solar cell
Measuring range, temperature	0...50 °C
Measurement accuracy	±0.4 K
Time constant	≤16 min
Setpoint readjustment range	±10 K
Degree of protection	IP30
Dimensions (W x H x D)	55 x 55 x 28 mm
Weight	0.05 kg

Stock No.	Product No.
S55623-H107	**QAX98.4**

Radio frequency receiver with Gateway EnOcean/LonWorks, AC / DC 24 V, external antenna

RXZ95.1/LON

- Wireless receiver with LonWorks® interface FTT10A
- Evaluation of up to 9 EnOcean room units (room temperature and setpoint adjustment)

For use with:
- Desigo RXC
- Devices / systems with LonWorks® communication

An external antenna is included in the delivery.

Data sheet	N1661
Operating voltage	DC 24 V AC 24 V
Voltage supply	LonWorks bus (LPT10)
Power consumption	0.82 VA
Ambient temperature, operation	-20...60 °C
Ambient humidity, operation	<70 % r.H.
Degree of protection	IP42
Dimensions (W x H x D)	58 x 78 x 46 mm
Weight	0.173 kg

Stock No.	Product No.
S55842-Z100	**RXZ95.1/LON**

Radio frequency receiver with Gateway EnOcean/KNX, powered via KNX bus

RXZ97.1/KNX

- Wireless receiver with KNX interface
- Evaluation of up to 32 EnOcean room units (Room temperature and setpoint adjustment)
- With RXB, other EnOcean functions may also be integrated: switches, window contacts, motion detectors
- Other EnOcean functions (dimming, blinds, light sensors) can be realized in KNX systems
- Powered via KNX bus
- With internal antenna

Can be used with:
- Desigo RXB and Desigo TRA
- Devices / Systems with KNX Communication

Data sheet	N1662
Operating voltage	DC 24 V
Voltage supply	KNX bus
Power consumption	0.6 VA
Ambient temperature, operation	-5...45 °C
Ambient humidity, operation	5...93 % r.H.
Degree of protection	IP20
Dimensions (W x H x D)	71 x 71 x 27 mm
Weight	0.07 kg

Stock No.	Product No.
S55842-Z101	**RXZ97.1/KNX**

3

QAX5..

Versatile room units with LonWorks interface

Versatile room units with LonWorks bus communication.
- Acquisition of room temperature
- Buttons for adjustment of room temperature setpoint
- Rocker switch for selecting the HVAC operating state (Off / Auto) and for manual fan speed control with fan coil systems (up to 3 speeds)
- LCD with display of room temperature and operating state
- Configurable keypad for operation of lighting and blinds
- LonMark-compatible bus communication

Data sheet	N1648
Voltage supply	LonWorks bus (LPT10)
Communication	Bus: LonWorks
Mounting location	Indoors
Mounting	Directly on wall In recessed or top-mounted conduit box
Dimensions (W x H x D)	80 x 187 x 20 mm

QAX50.5/C000

Versatile room unit with LonWorks interface, lighting systems (on / off)

For operating HVAC systems and controlling lighting systems (on / off) and blinds.

Data sheet	N1648

Stock No.	Product No.
S55623-H114	**QAX50.5/C000**

QAX51.5/C000

Versatile room unit with LonWorks interface, lighting systems (dimmed)

For operating HVAC systems and controlling lighting systems (dimmed) and blinds.

Data sheet	N1648

Stock No.	Product No.
S55623-H115	**QAX51.5/C000**

Room unit with KNX bus

QAW740

Configurable unit with display of operating mode, timer, temperatures and fault.

With 3 operating elements:
- Knob for setpoint readjustments
- Operating mode button
- Timer button

Data sheet	N1633
Setpoint readjustment range	±3 K
Measuring range, temperature	0...50 °C
Degree of protection	IP20
Communication	KNX TP1 EE
Connection cable	2-wire

Stock No.	Product No.
BPZ:QAW740	**QAW740**

Home Automation System Synco living

4

Overview and selection tools	Overview of product details	4-2
Synco™ living	Central apartment unit QAX9..	4-5
	Room unit QAW91.. and room sensor QAA91..	4-9
	Radiator control actuator SSA95..	4-11
	Heating circuit controller RRV91..	4-12
	Multi controller RRV93..	4-14
	Consumption data interface WRI982	4-15
	Water monitor QFP910 and handheld control AFK914/C01	4-16
	Meteo sensor QAC91..and RF repeater ERF91	4-17
	Starter Kit 91..	4-18

Central apartment unit (1)

The heart and brain of the system. From here you can control all different functions for up to 12 rooms quickly and easily and monitor them via the display.

Room unit / room temperature sensor (2)

The room unit measures the room temperature and allows the settings entered into the central apartment unit, such as temperature and operating parameters, to be adjusted for individual rooms. The comfort settings can be extended at the push of a button.

The room temperature sensor measures the room temperature and communicates this by radio to the central apartment unit.

Radiator control actuator (3)

Measures room temperature, receives the pre-set desired temperature for this room by radio signal from the central apartment unit and regulates room temperature by adjusting the radiator valve. It can also be regulate up to 5 additional radiators per room, thereby ensuring an even temperature between radiators.

Heating circuit controller / Multicontroller / Consumption data interface (4)

Compares the actual values and setpoints for each room communicated to the central apartment unit via RF and regulates the temperature by adjusting the valve settings of the heat distributer.
For precontrol of up to 2 independent hydraulic room groups (e.g. radiators, floor heating) or control of ventilation plant with up to 3 stages.
The consumption data interface collects consumption meter data of heat/cool, electicity, water and gas

Web server (5)

Connects the home automation system to the internet, allowing you to access and operate the system from a remote location and remotely read the consumption data.

Socket outlet switche (6)

For remote control of electrical appliances. Operated via central apartment unit, a handheld remote control unit or external button, all via KNX RF.

Meteo sensor (7)

Acquires the outside temperature and atmospheric pressure and communicates this via RF to the central apartment unit.

Smoke detector (8)

Detects smoke in the event of a fire breaking out and sets off an alarm. It communicates the alarm by radio to the Synco™ living central control unit. From there the alarm can be sent by SMS, pager or e-mail to one or more recipients.

Lighting and blind control (9)

Wireless and therefore convenient control of lighting and blinds – centrally, locally in the room, or as a scene. Naturally, the components can also be operated automatically, e.g. via time programs or simulation of presence.

Door / window contact (10)

Monitors the status of windows, doors and gates and transmits the relevant data to the central apartment unit. In the case of deviations from the norm, the system can alert you in a variety of ways, increases comfort.

Use Synco™ living – and technology becomes your valued companion in the house

Synco™ living is the new modular Homeautomation system from Siemens. It offers central operation and adapts all parameters for comfortable living, such as optimum room temperatures, air and light conditions, safety and security, plus economical use of energy and financial resources, to individual needs. The system can be dynamically matched to changing living conditions. Information within the system is transmitted either wire-bound (KNX TP1) or via radio (KNX RF).
To be able to satisfy all kinds of requirements in the residential sector, today's Homeautomation systems must be compatible with a large number of systems on the market. Synco™ living offers absolute openness. This means that – now or later – you can integrate almost any type of system into your Synco™ living configuration conforming to European standards.

4

Synco™ living starter kit

The Synco living starter kit is a wireless room temperature control system for heating plants comprising up to 2 individual zones. A maximum of 6 radiator control actuators can be integrated in the system and the collected heat requests can be forwarded to heat generation.

KIT911

KIT914

Room unit (1)

Managed room heating control of up to 2 heating zones (rooms) and 6 SSA955 radiator control actuators. The unit ensures full control of the room heating functions and all data are clearly shown on the display. Furthermore, the QAW912 acquires the room temperature in the relevant room.

Radiator control actuator (2)

Acquires the room temperature, receives the preset desired temperature for this room via radio signal from the room unit and regulates the room temperature by adjusting the radiator valve. It can also regulate up to 5 additional radiators per room, thereby ensuring even temperatures between radiators.

RF adapter plugs, switching (3) Heating circuit controller (3)

Receives the heat request from the room unit via radio signal and switches heat generation.

Central apartment unit with energy consumption data collection

QAX913..

The central apartment unit serves as an operator and display unit for an apartment.
It manages individual room control (heating/cooling) of up to 12 rooms, comfort ventilation, precontrol and DHW control, control of air conditioning equipment, and acquires the consumption data of heat, water, electricity and gas. Additional functions include the control of lights and blinds. Door and window contacts plus smoke detectors and water monitors can be integrated for monitoring purposes.

- Management of heating and cooling control for one apartment
  - Suited for heating and cooling plants with central distribution (e.g. underfloor heating) and radiators with decentral connections
  - Selection of operating mode, timer and holidays / special day function for the apartment
  - Independent time switches and operating modes for 12 rooms
  - Flow temperature control of 2 independent room groups including limitation (min. / max.) and maintained return temperature (high / low)
  - Increase of economy room temperature setpoint and minimum flow temperature setpoint depending on the composite outside temperature
  - Collection of heat / cooling requests from the individual rooms and forwarding the requests to the heat/cooling sources via wired bus, heat/cooling demand relay or DC 0...10 V output to the RRV912 or RRV934
- Absence function (heating, cooling, ventilation, lights) with simulation of presence (lights)
- DHW heating with time switch and selection of operating mode
- Management of 3-stage ventilation plant via RRV934 multicontroller, incl. night cooling
- Control of air conditioners (split units) via universal outputs (locally and RRV91x) or via S-Mode (KNX TP1)
- Operation of lights and blinds via 4 softkeys, time switch and events
- Monitoring door contacts, window contacts and smoke detectors
- Display of meteorological data
- Presentation of key data on info pages
- Wireless communication with the devices of GAMMA wave and Hager tebis TX product ranges
- Remote access via Siemens web server OZW772.xx
- Collection of meter data (heat / cool, electricity, water, gas) to support automated meter reading & billing

Data sheet	N2740
Operating voltage	AC 230 V
Power consumption	7 VA
Communication	KNX RF-compatible, 868.3 MHz bidirectional (RF) and KNX TP1 (wired bus)
Indoor wireless range	30 m
Display	Full graphic backlit display
Universal input, signal	Digital 0/1 LG-Ni1000
Universal inputs, number	1
Measuring range, temperature	0...120 °C
Relay output, switching voltage	AC 24...230 V NO - contact
Relay output, switching current	AC 0.02...2 (2) A
Relay outputs, number	1
Degree of protection	IP20D
Dimensions (W x H x D)	230 x 130 x 29.7 mm

Range overview QAX913..

Product Title	Data sheet	Stock No.	Product No.
Central apartment unit with energy consumption data collection, without instructions; plain text output in 23 languages	N2740	S55621-H126	QAX913-9
Central apartment unit with energy consumption data collection in German Instructions in de; plain text output in de, en, fr, it, nl, es, pt	N2740	S55621-H111	**QAX913-DE**
Central apartment unit with energy consumption data collection in French Instructions in fr; plain text output in de, en, fr, it, nl, es, pt	N2740	S55621-H114	**QAX913-FR**
Central apartment unit with energy consumption data collection Instructions in it; plain text output in de, en, fr, it, es, nl, pt	N2740	S55621-H116	**QAX913-IT**
Central apartment unit with energy consumption data collection in Dutch Instructions in nl; plain text output in de, en, fr, it, nl, es, pt	N2740	S55621-H120	**QAX913-NL**
Central apartment unit with energy consumption data collection in Polish Instructions in pl; plain text output in en, pl, cs, hu, ru, bg, sk	N2740	S55621-H122	**QAX913-PL**
Central apartment unit with energy consumption data collection in Czech Instructions in cs; plain text output in en, pl, cs, hu, ru, bg, sk	N2740	S55621-H124	**QAX913-CS**
Central apartment unit with energy consumption data collection in Czech Instructions in cs; plain text output in en, pl, cs, hu, ru, bg, sk	N2740	S55621-H124	**QAX913-CS**

Central apartment unit for HVAC and energy consumption data collection

QAX903..

The central apartment unit serves as an operator and display unit for an apartment.
It manages individual room control (heating/cooling) of up to 12 rooms, comfort ventilation, precontrol, control of air conditioning equipment, and acquires the consumption data of heat, water, electricity and gas.

- Management of heating and cooling control for one apartment
- Suited for heating and cooling plants with central distribution (e.g. underfloor heating) and radiators with decentral connections
- Selection of operating mode, timer and holidays / special day function for the apartment
- Independent time switches and operating modes for 12 rooms
- Flow temperature control of 2 independent room groups including limitation (min. / max.) and maintained return temperature (high / low)
- Increase of economy room temperature setpoint and minimum flow temperature setpoint depending on the composite outside temperature
- Collection of heat / cooling requests from the individual rooms and forwarding the requests to the heat/cooling sources via wired bus, heat/cooling demand relay or DC 0...10 V output to the RRV912 or RRV934

- Absence function (heating, cooling, ventilation)
- Management of 3-stage ventilation plant via RRV934 multicontroller, incl. night cooling
- Control of air conditioners (split units) via universal outputs (locally and RRV91x) or via S-Mode (KNX TP1)
- Display of meteorological data
- Presentation of key data on info pages
- Remote access via Siemens web server OZW772.xx
- Collection of meter data (heat / cool, electricity, water, gas) to support automated meter reading & billing

Data sheet	N2741
Operating voltage	AC 230 V
Power consumption	7 VA
Communication	KNX RF-compatible, 868.3 MHz bidirectional (RF) and KNX TP1 (wired bus)
Indoor wireless range	30 m
Display	Full graphic backlit display
Universal input, signal	Digital 0/1 LG-Ni1000
Universal inputs, number	1
Measuring range, temperature	0...120 °C
Relay output, switching voltage	AC 24...230 V NO - contact
Relay output, switching current	AC 0.02...2 (2) A
Relay outputs, number	1
Degree of protection	IP20D
Dimensions (W x H x D)	230 x 130 x 29.7 mm

Range overview QAX903..

Product Title	Data sheet	Stock No.	Product No.
Central apartment unit for HVAC and energy consumption data collection, without instructions; plain text output in 23 languages without instructions; plain text output in bg, dk, de, en, fi, el, hr, no, pl, ro, ru, sv, sr, sl, sk, cs, tr, hu, it, fr, nl, es, pt	N2741	S55621-H125	QAX903-9
Central apartment unit for HVAC and energy consumption data collection in German Instructions in de; plain text output in de, en, fr, it, nl, es, pt	N2741	S55621-H110	**QAX903-DE**
Central apartment unit for HVAC and energy consumption data collection in French Instructions in fr; plain text output in de, en, fr, it, nl, es, pt	N2741	S55621-H113	**QAX903-FR**
Central apartment unit for HVAC and energy consumption data collection in Italian Instructions in it; plain text output in de, en, fr, it, nl, es, pt	N2741	S55621-H115	**QAX903-IT**
Central apartment unit for HVAC and energy consumption data collection	N2741	S55621-H119	**QAX903-NL**
Central apartment unit for HVAC and energy consumption data collection	N2741	S55621-H121	**QAX903-PL**
Central apartment unit for HVAC and energy consumption data collection	N2741	S55621-H123	**QAX903-CS**

Room unit

QAW910

Wireless room unit.
The QAW910 is used for the operation and display of basic space heating functions. It also forwards the acquired room temperature to the central apartment unit QAX9.., either periodically or when changes occur. The room temperature is shown on the display of the QAW910.

- Operation and display of space heating functions
- Selection of room operating mode, timer function and room temperature setpoint readjustment
- Display of space heating function and status messages
- Acquisition of the room temperature
- Battery-powered by commercially available 1.5 V batteries (contained in the scope of delivery)
- Especially suited for:
- Renovation projects (old buildings, museums, churches, historical buildings, etc.)
- Difficult wall-mounting situations (sandstone, glass, etc.)
- Variable floor plans (different décors, furniture changes)
- New houses and buildings
- RF communication based on KNX standard (868 MHz, bidirectional)

Data sheet	N2703
Voltage supply	Mignon (2xAA) LR6
Battery life	3 years
Battery capacity	2.5 Ah
Communication	KNX RF-compatible, 868.3 MHz bidirectional (RF)
Indoor wireless range	30 m
Measuring range, temperature	0...50 °C
Display	Segment LCD
Display size	Resolution 0.1 °C
Degree of protection	IP40
Dimensions (W x H x D)	84 x 130 x 23.6 mm

	Stock No.	Product No.
	BPZ:QAW910	**QAW910**

Synco™ living
Room unit QAW91.. and room sensor QAA91..

QAA910

Room temperature sensor

Wireless room temperature sensor for acquiring the room temperature.
During operation, the QAA910 forwards the acquired room temperature to the central apartment unit QAX9.., either periodically or in the case of changes.

- Battery-powered by commercially available 1.5 V batteries (contained in the scope of delivery)
- Especially suited for:
- Renovation projects (old buildings, museums, churches, historical buildings, etc.)
- Difficult wall-mounting situations (sanddstone, glass, etc.)
- Variable floor plans (different décors, furniture changes)
- New construction projects
- RF communication based on KNX standard (868 MHz, unidirectional)

Data sheet	N2701
Voltage supply	Mignon (2xAA) LR6
Battery life	3 years
Battery capacity	2.5 Ah
Communication	KNX RF-compatible, 868.3 MHz unidirectional (RF)
Indoor wireless range	30 m
Measuring range, temperature	0...50 °C
Degree of protection	IP40
Dimensions (W x H x D)	84 x 84 x 23 mm

Stock No.	Product No.
BPZ:QAA910	**QAA910**

Radiator control actuator

SSA955

RF-based actuator for radiator valves.
The SSA955 controls the room temperature based on the data forwarded by the central apartment unit QAX9...

- Battery-powered by commercially available 1.5 V batteries (contained in the scope of delivery)
- Silent mode (e.g. for use in sleeping rooms)
- Automatic identification of valve stroke
- Parallel connection of multiple actuators possible
- Integrated temperature sensor
- For direct mounting with coupling nut (no tools required)
- Manual adjustment
- RF communication based on KNX standard (868 MHz, bidirectional)

Data sheet	N2700
Voltage supply	Mignon (3xAA) LR6
Battery life	3 years (2 years in silent mode)
Battery capacity	2.5 Ah
Communication	KNX RF-compatible, 868.3 MHz bidirectional (RF)
Indoor wireless range	30 m
Sound power level	Silent mode: <25 dB (A) Normal mode: <30 dB (A)
Stroke	2.5 mm
Positioning force	110 N
Medium temperature	1...110 °C
Measuring range, temperature	0...50 °C
Ambient temperature, operation	1...50 °C
Connecting thread	M30 x 1.5
Degree of protection	IP40
Mounting position	Upright to 90° inclined
Dimensions (W x H x D)	48 x 95 x 80.6 mm

Suitable adaptors for valves of other manufacturers types AV5 . and AV6 ., see chapter " Valves and actuators for room- and zone applications"

	Stock No.	Product No.
	BPZ:SSA955	**SSA955**

Synco™ living
Heating circuit controller RRV91..

RRV912

Heating circuit controller, 2 heating circuits

RF-based heating circuit controller for up to 2 heating circuits and DHW heating.
In operation, the RRV912 maintains the required room temperature of the individual heating circuits.
The central apartment unit QAX9.. forwards the relevant data via RF.

- Suited for use in heating and cooling plants
- With central distributors (e.g. underfloor heating or soft steel piping system)
- For use with motorized radiator valves (e.g. with sill covers)
- Heating circuit control with 2- or 3-position actuators
- 2 universal relay outputs, e.g. for control of the room group pump and DHW heating
- 1 universal input, e.g. for connection of a DHW temperature sensor or an alarm
- 1 universal output DC 0...10 V for forwarding the heat / cooling demand signal
- RF communication based on KNX standard (868 MHz, bidirectional)

Data sheet	N2705
Operating voltage	AC 230 V
Power consumption	7 VA
Communication	KNX RF-compatible, 868.3 MHz bidirectional (RF)
Indoor wireless range	30 m
Control algorithm	2-position: PID, 3-position: PID
Triac output, switching voltage	AC 230 V
Triac output, switching current	30 mA
Triac outputs, number	2
Universal output, signal	DC 0...10 V
Universal output, current	max. DC 1 mA
Universal outputs, number	1
Universal input, signal	Digital 0/1 LG-Ni1000
Universal inputs, number	1
Measuring range, temperature	0...120 °C
Relay output, switching voltage	AC 24...230 V NO - contact
Relay output, switching current	AC 0.02...2 (2) A
Relay outputs, number	2
Degree of protection	IP30
Mounting	On DIN rail With screws
Dimensions (W x H x D)	180 x 98 x 50 mm

Stock No.	Product No.
BPZ:RRV912	**RRV912**

Heating circuit controller, 8 heating circuits

RRV918

RF-based heating circuit controller for up to 8 heating circuits.
In operation, the RRV918 maintains the required room temperature of the individual heating circuits.
The central apartment unit QAX9.. forwards the relevant data via RF.

- Suited for use in heating and cooling plants
- With central distributors (e.g. underfloor heating or soft steel piping system)
- For use with motorized radiator valves (e.g. with sill covers)
- Connection facility for up to eight 2-position actuators
- 1 Universal relay output, e.g. for control of the room group pump and DHW heating
- 1 Universal input, e.g. for connection of a DHW temperature sensor or an alarm
- RF communication based on KNX standard (868 MHz, bidirectional)

Data sheet	N2706
Operating voltage	AC 230 V
Power consumption	7 VA
Communication	KNX RF-compatible, 868.3 MHz bidirectional (RF)
Indoor wireless range	30 m
Control algorithm	2-position PID
Triac output, switching voltage	AC 230 V
Triac output, switching current	30 mA
Triac outputs, number	8
Universal input, signal	Digital 0/1 LG-Ni1000
Universal inputs, number	1
Measuring range, temperature	0...120 °C
Relay output, switching voltage	AC 24...230 V NO - contact
Relay output, switching current	AC 0.02...2 (2) A
Relay outputs, number	1
Degree of protection	IP30
Mounting	On DIN rail With screws
Dimensions (W x H x D)	245 x 98 x 50 mm

Stock No.	Product No.
BPZ:RRV918	**RRV918**

Synco™ living
Multi controller RRV93..

RRV934

Multicontroller

RF-based multicontroller for precontrol of up to 2 room groups or control of ventilation plant with up to 3 stages. All inputs and outputs are also suited for universal use. The relevant data are forwarded wirelessly by the central apartment unit QAX9...

- Suited for use in heating and cooling plants for precontrol of up to 2 room groups
- 2 primary controllers each with a DC 0...10 V actuator
- 1 primary controller with a DC 0...10 V actuator and 1 primary controller with a 3-position actuator
  Flow and return temperature limitation, optional control of room group pumps and DHW heating
- Suited for control of 3-stage ventilation plant incl. HR bypass, with impact from humidity, indoor air quality or CO_2- level, incl. fault monitoring
- Forwarding the heat / cooling demand signal to primary energy plant
- RF communication based on KNX standard (868 MHz, bidirectional)

Data sheet	N2709
Operating voltage	AC 230 V
Power consumption	7 VA
Communication	KNX RF-compatible, 868.3 MHz bidirectional (RF)
Indoor wireless range	30 m
Control algorithm	Precontroller: PI
Universal output, signal	DC 0...10 V
Universal output, current	max. DC 1 mA
Universal outputs, number	2
Universal input, signal	Digital 0/1 LG-Ni1000 DC 0...10 V
Universal inputs, number	4
Measuring range, temperature	0...120 °C
Relay output, switching voltage	AC 24...230 V NO - contact
Relay output, switching current	AC 0,02...2 (2) A
Relay outputs, number	4
Degree of protection	IP30
Mounting	On DIN rail With screws
Dimensions (W x H x D)	245 x 98 x 50 mm

Stock No.	Product No.
BPZ:RRV934	**RRV934**

Consumption data interface

WRI982

The consumption data interface collects consumption (meter) data and communicates these data using KNX RF directly to the central apartment unit (QAX913 or QAX903). Meters may be connected either via Impulse inputs or via M-Bus (wired). There is an additional interface for communication with the Synergyr central communication device, OW30, for the purpose system migration.

- M-Bus MiniMaster for up to 3 M-Bus meters
- 2 Impulse inputs for impulse meters
- BatiBus communication to Synergyr OZW30
- KNX RF communication to QAX913 or QAX903

Data sheet	N2735
Operating voltage	AC 230 V
Power consumption	7 VA
Communication	KNX RF-compatible, 868.3 MHz bidirectional (RF) BatiBus communication to Synergyr OZW30
Indoor wireless range	30 m
Degree of protection	IP30
Mounting	On DIN rail or with screws
Dimensions (W x H x D)	120 x 90 x 50 mm

Stock No.	Product No.
S55621-H112	**WRI982**

Synco™ living
Water monitor QFP910 and handheld control AFK914/C01

QFP910

Water monitor

Wireless sensor for detecting water leaks.
The QFP910 sends its status (dry / water leak) to the Central Apartment Unit QAX913 periodically or if there is a change in status.

- Battery-powered by commercially available 1.5 V batteries (contained in the scope of delivery)
- External water leak sensor
- RF communication based on KNX standard (868 MHz, unidirectional)

Data sheet	N2732
Voltage supply	Mignon (2xAA) LR6
Battery life	3 years
Battery capacity	2.5 Ah
Communication	KNX RF-compatible, 868.3 MHz unidirectional (RF)
Indoor wireless range	30 m
Degree of protection	IP40
Dimensions (W x H x D)	84 x 84 x23 mm

Stock No.	Product No.
S55371-C100	**QFP910**

AFK914/C01

Handheld control

Handheld device for remotely operating predifined functions of the Central Apartment Unit QAX913

- Up to 4 different functions may be initiated, one for each of the four buttons
- The function of each button may be individually configured on the Central Apartment Unit
- Battery powered by commercially available lithium batteries (type CR2032)
- RF communication based on the KNX standard (868 MHz, bidirectional)
- Colored LEDs to indicate status and confirmation from the Central Apartment Unit

Data sheet	N2731
Voltage supply	Lithium button cell (1xCR2032)
Battery life	≥3 years (when operated 2.5 times per day)
Battery capacity	0.230 mAh
Communication	KNX RF-compatible, 868.3 MHz, bidirectional (RF)
Indoor wireless range	30 m
Degree of protection	IP41
Dimensions (W x H x D)	55 x 28 x 12 mm

Stock No.	Product No.
S55621-H105-C901	**AFK914/C01**

Meteo sensor

QAC910

Wireless sensor for acquiring outside temperature and atmospheric pressure.
In operation, the QAC910 forwards the acquired outside temperature and atmospheric pressure to the central apartment unit QAX9.., either periodically or when changes occur.

- Battery-powered by commercially available 1.5 V batteries (contained in the scope of delivery)
- Especially suited for:
- Renovation projects (old buildings, museums, churches, historical buildings, etc.)
- Difficult wall-mounting situations (sandstone, glass, etc.)
- Variable floor plans (different décors, other furniture)
- New houses or buildings
- RF communication based on KNX standard (868 MHz, unidirectional)
  2-Wire cable between meteo sensor and transmitter required

Data sheet	N2702
Voltage supply	Mignon (2xAA) LR6
Battery life	3 years
Battery capacity	2.5 Ah
Communication	KNX RF-compatible, 868.3 MHz unidirectional (RF)
Indoor wireless range	30 m
Measuring range, temperature	-50...50 °C
Degree of protection	IP40
Additional info	Dimensions (W x H x D): Outside sensor: 80 X 92 x 50 mm RF transmitter: 84 x 84 x 23 mm

Stock No.	Product No.
BPZ:QAC910	**QAC910**

RF repeater

ERF910

Wireless RF repeater for extending plant.
In operation, the ERF910 repeats the RF telegrams from the devices attuned to it.

- Extending and ensuring RF coverage in the Siemens Synco living system
- Especially suited for:
- Renovation projects (old buildings, museums, churches, historical buildings, etc.)
- Difficult wall-mounting situations (sandstone, glass, etc.)
- Variable floor plans (different décors, furniture changes)
- New houses and buildings
- External power pack
- RF communication based on KNX standard (868 MHz, bidirectional)

Data sheet	N2704
Operating voltage	AC 230 V
Power consumption	0.2 VA
Communication	KNX RF-compatible, 868.3 MHz bidirectional (RF)
Indoor wireless range	30 m
Degree of protection	IP40
Dimensions (W x H x D)	84 x 84 x 23 mm

Stock No.	Product No.
BPZ:ERF910	**ERF910**

Synco™ living
Starter Kit 91..

KIT91..

Starter kit

Wireless starter kit for radiator application, consisting of:
- One QAW912 room unit - 2 heating zones
- One or 4 SSA955 radiator control actuators

The starter kit can be complemented by additional SSA955 - up to a total of 6

Data sheet	N2720
Communication	KNX RF-compatible, bidirectional, 868.3 MHz
Indoor wireless range	30 m

Range overview KIT91..

Product Title	Packaging unit	Data sheet	Stock No.	Product No.
Starter kit with room unit and 1 radiator control actuator	1 x QAW912 + 1 x SSA955	N2720	S55621-H103	**KIT911**
Starter kit with room unit and 4 radiator control actuators	1 x QAW912 + 4 x SSA955	N2720	S55621-H104	**KIT914**

Room unit with KNX RF for 2 heating zones

QAW912

Wireless room unit
The QAW912 manages room heating control of up to 2 heating zones (rooms) and 6 SSA955 radiator control actuators. The unit facilitates full control of the room heating functions. All data are clearly shown on the display. Furthermore, the QAW912 acquires the room temperature in the relevant room.

- Operation and display of the room heating functions of both heating zones:
  - Selection of room operating mode
  - Activation of comfort timer / absence timer
  - Setting of 7-day time switch, holiday period and room temperature setpoints
  - Display of room heating funtion and status messages (incl. all SSA955 connected via radio link)
- Acquisition of the room temperature in one room
- Battery-powered by commercially available 1.5 V batteries (supplied with the unit)
- Collection of heat requests from both rooms and forwarding them to heat generation via the KRF960 or RRV912
- Specifically suited:
  - For renovation projects (old building, museums, churches, historical building, etc)
  - When wall mounting is difficult (sandstone, glass, etc.)
  - If flexible floor plans are required (changing decor, different furniture)
  - For new buildings
- Radio communication based on KNX standard (868 MHz bidirectional)
- Commissioning via operating buttons - no tools required

Data sheet	N2720
Voltage supply	Mignon (2xAA) LR6
Battery life	Typically 2 years (with battery capacity ≥2.5 Ah)
Communication	KNX RF-compatible, bidirectional, 868.3 MHz
Indoor wireless range	30 m
Measuring range, temperature	0...50 °C
Display	Segment LCD
Display size	Resolution 0.1 °C
Degree of protection	IP40
Dimensions (W x H x D)	84 x 130 x 23.6 mm

	Stock No.	Product No.
	S55621-H102	**QAW912**

Thermostats

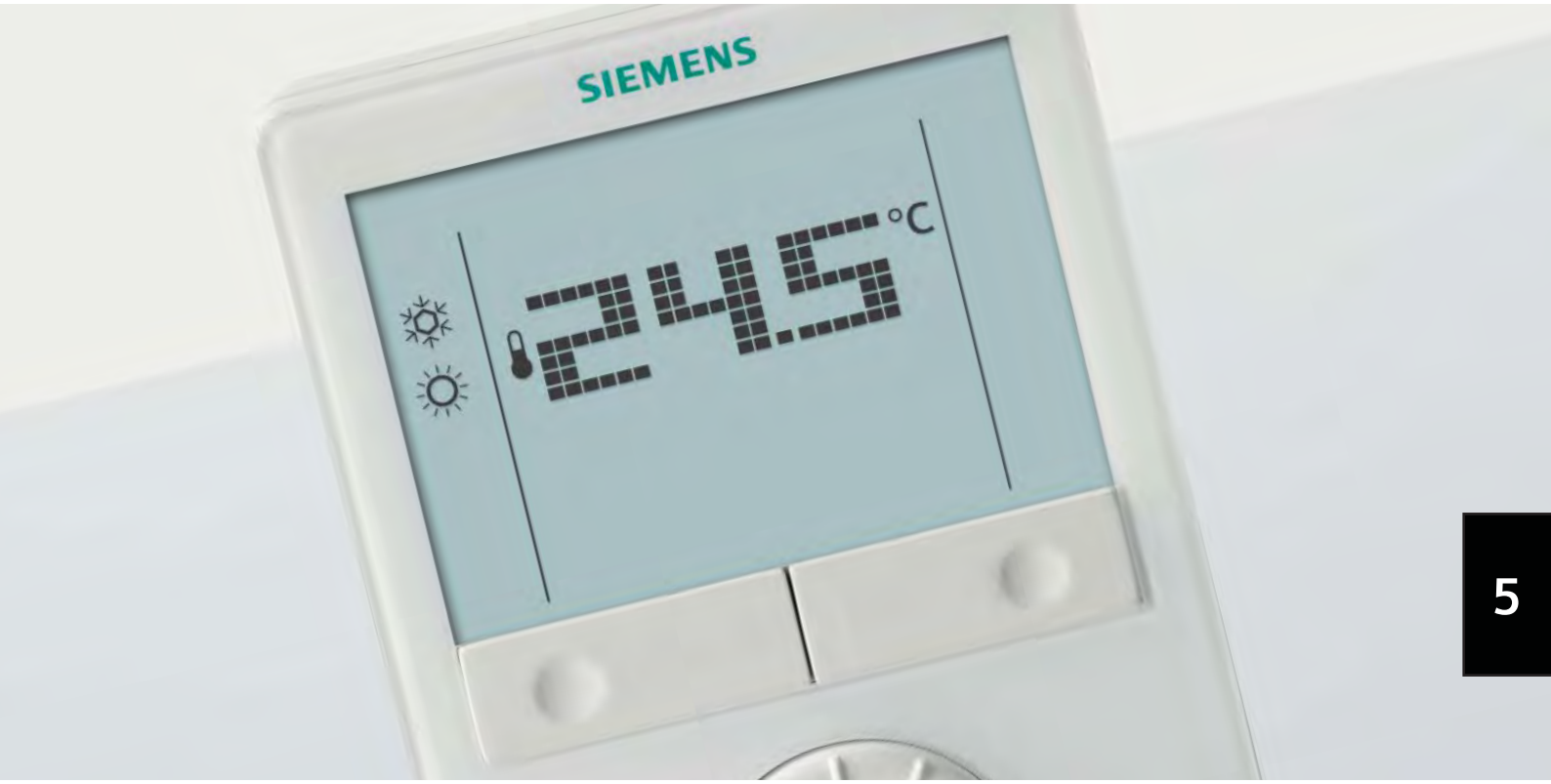

5

Overview and selection tools	Overview of product details	5-2
Autonomous room thermostats	Standard room thermostats: RAA..1.. / RCU..	5-7
	Standard room thermostats: 5TC92..	5-10
	Room temperature controllers RLA..	5-14
	Room thermostats with display: RDD.. / RDH..	5-16
	Room thermostats with time clock: REV.. / RDJ.. / RDE.. / RAV.. / REA..	5-18
	For fan coil units RAB.. / RCC..	5-26
	For fan coil units RDG1.. / RDF..	5-32
	For fan coil units RDF.. Semi Flush Mount	5-37
	Room thermostats: RCU.. / RDG.. / RDU..	5-44
	Room thermostats with display RDX..	5-47
Communicative room thermostats	Room thermostats with display: RDG100KN	5-48
	Room thermostats with display RDF..Semi Flush Mount, RDF..	5-49
	Room thermostats with display: RDG400KN	5-50
	Room thermostats with display Semi Flush Mount, RDU..	5-51
	Room thermostats with display Semi Flush Mount, RDF302	5-52
Capillary and clamp-on thermostats	Controller / monitor / limiter: RAK.. / RAZ.. / RAM.. / RAG.. / RYT.. / TKM..	5-53
	Frost protection units: QAF.. / RAK.. / TKM..	5-62
	Coild probe thermostats TRG..	5-66

Overview and selection tools
Overview

Room thermostats

Siemens is a leading supplier of room temperature controllers for a wide range of heating, ventilation and cooling applications in residential buildings, hotels, office and commercial buildings.

Siemens solutions meet every budget: Basic electromechanical on/off units, advanced touchscreen products, OpenTherm, RF-based or infra-red controllers, as well as controllers with modulating outputs. Programmable controllers with 24-hour or 7-day programs and non-programmable room temperature controllers are available as analog or digital products with displays.

Quality, reliability, outstanding functionality, ease of installation and use: Our room controls satisfy your needs. The unique and acclaimed Siemens design is an additional stylish feature.

Proudly made around the world.

- Quality really is the issue
- R&D the lifeblood of innovation
- Standards are not negotiable
- Product lifecycles and environment in partnership

Heating / Colling applications

	Basic		With display			With time switch					
	RAA	RCU	RDG	RDD	RDH	RDE	RDJ	RAV	REA	REV	REVxx00
Housing											
Setpoint knob	□	■	■		✪		✪	■			
Setpoint buttons				■		■			■	■	■
Mechanical clock								✪			
LED indicators	□							■			
Digital display			✪	■	■	■	■		■	■	■
Touchscreen											✪
Programming menu									✪		
Programming slider							■			✪	
Wiring											
Mains-independet	✪										
Battery-powered				□	■	□	■	■	■	■	■
Mains-powered	□	■	□	□	*	□	*			*	*
OpenTherm bus									■		
Radio frequency transmission					□		□		□	□	□
Modulating heating valve control		✪	□							□	□
Remote control input									■	■	■
Analog output		□	□								
Relay output	■	□		■	■	■	■	■	■	■	■
Functionalities											
Heating plants	■	■	■	■	■	■	■	■	■	■	■
Cooling plants	■	■	■	■	■				□	□	□
Domestic hot water control				□		□					
Time clock – Timer				✪							
Time clock – Daily							■	□		□	□
Time clock – Weekly			□			✪		□	■	□	□
Operating mode – Comf. mode	■	■	■	■	■	■	■	■	■	■	■
Operating mode – Eco mode		■	■	■		■	■	■	■	■	■
Operating mode – Standby.		■				■					
Operating mode – Frost protect.				□		□	■	■	■	■	■
Operating mode – Holidays			■						■	□	■
Control loop	2-point	2-point	2-point/PI	2-point	2-point	2-point	2-pointl	2-point PID	2-point PID	2-point/PID or PI	2-point/PID or PI

■ Valid for all variants □ Depending on variants ✪ **Main feature** *Radio frequency receiver only

Fan-coils applications

	Basic		With display		With time switch			
	RAB	RCC	RDG1xx	RDF3xx RDF600..	RDG100T	RDG100T/H	RDF210/IR	RDF4xx RDF600T
Housing								
Setpoint knob	■	■	■		■			
LED indicators	□	✪						
Digital display			✪	■	■		■	■
Auto fan speed			■	■	■		■	■
Semi-flush mounting				✪				✪
Wiring								
Mains-independet	✪							
Mains-powered		■	□	■	□		■	■
Multifunctional input			■		■			
Sensor input		□	■		■		■	
Changeover input		■	■		■		■	
Analog output		□	□					
Relay output (on/off)	■	□	□	■			■	■
Triac 2-p/3-p/PWM			□		■			
Functionalities								
2-pipe-system	□	□	■	■	■		■	■
4-pipe system	□	□	■	□	■			□
Electric heater		□	□		□			
Radiator			■		■			
7-day time switch					✪		✪	✪
Modes – Comfort	■	■	■	■	■		■	■
Modes – Economy		■	■	■	■		■	■
Modes – Standby/Prot.	□	■	■	■	■		■	■
Modes – Frost protect.		□	■	■	■		■	■
Control loop	2-point	2-point or PI	2-point or PI	2-point	2-point or PI		2-point	2-point
Infrared remote control				□	■		■	□
KNX			□	□				

Heat Pumps applications

	Whit Display		With time switch	
	RDG110	RDF3xx / RDF600..	RDF4xx / RDF600T	RDF210/IR
Housing				
Digital display	■	■	■	■
Fan speed command	3	3	3	3
Wiring				
Mains-powered	■	■	■	■
Sensor input	■	■	■	□
Relay output	■	■	■	■
Functionalities				
Electric heater	■	■	■	
DX compressor	■	□	□	■
Manuel Heat / Cool changeover	■	■	■	
Weekly time clock			■	■
Operating mode – Comf. mode	■	■	■	■
Operating mode – Eco mode	■	■	■	■
Operating mode – Standby.				■
Operating mode – Frost protect.	■	■	■	■
Control loop	2-point	2-point	2-point	2-point
KNX		□		

■ Valid for all variants □ Depending on variants ✪ **Main feature** *Radio frequency receiver only [1]suppress

Overview and selection tools
Overview

VAV applications			
	Basic	With display	
	RCU5x	RDU340	RDG400
Housing			
Setpoint knob	■		■
Digital display		■	■
Semi-flush mounting		■	
Wiring			
Mains-powered	■	■	■
Senor input		■	■
Changeover input	□	■	■
Analog output	■	■	■
Relay output	□	■	
Functionalities			
Manuel Heat / Cool changeover	□	■	■
External setpoint shift	□		
Vmin Cooling	■	■	■
Operating mode: Comf. mode	■	■	■
Operating mode: Eco mode	■	■	■
Operating mode: Sandby/Prot.	■	■	■
Operating mode: Frost protect.	■	■	■
Control loop	2-point	P/PI	P/PI

■ Valid for all variants □ Depending on variants ✪ **Main feature** *Radio frequency receiver only [1]suppress

5

Overview

Type	Function: Control thermostat (TR)	Function: Thermal reset limit thermostat (TW)	Function: Limit thermostat (TB)	Function: Safety limit thermostat (STB)	Setting range: TR /TW: Set point [°C] / TB / STB: Setpoint cut-out temperature [°C]	Capillary length [mm]	Switching cap. AC 24...250 V: 1 - 2: 10 (2,5) A / 1 - 3: 6 (2,5) A [TB / STB: 0,5 A]	Switching cap. AC 24...250 V: 1 - 2: 16 (2,5) A / 1 - 3: 6 (2,5) A [STB: 2 (0,5) A]	Approvals: CE (73/23/EEC, 89/336/EEC, EN60730)	Approvals: ENEC (European Norms Elec. Certif.)	Approvals: PED (Pressure Equipment Directive)	Approvals: EN14597 (old approval: DIN3440)	Approvals: ISPESL	Approvals: C-Tick	IP: Degree of protection (IP)	Set: Pocket ALT-SB100 / ALT-DB100 (length mm)	Set: Clamping band for piping up to Ø 105 mm	Set: Clamping spring for piping Ø 9,5...16 mm	Sensor element / mounting: Remote line – Sensor with capillary line	Sensor element / mounting: Surface thermostat – Sensor attached to housing	Sensor element / mounting: Ductwork – The entire capillary as sensor (at least 30 cm for detection)	Sensor element / mounting: Immersion – immersion sensor	Sensor element / mounting: Room thermostat – Helix sensor	Applications [4]: Temperature control	Applications [4]: Temperature limitation	Applications [4]: Frost protection	Applications [4]: Air conditioning	Applications [4]: Heating boilers	Applications [4]: Domestic hot water heating	Applications [4]: Heat exchangers	Applications [4]: Floor heating
RAK-ST.010FP-M				■	95	700	■		■	■	■	■	■	■	43	100			■	■		■			■			■				
RAK-ST.020FP-M				■	100	700	■		■	■	■	■		■	43	100			■	■		■			■			■				
RAK-ST.030FP-M				■	110	700	■		■	■	■	■		■	43	100			■	■		■			■			■				
RAK-ST.1430S-M				■	80...100	700	■		■	■	■	■		■	43		■		■	■		■			■			■				
RAK-ST.1310P-M				■	90...110	700	■		■	■	■	■		■	43	100			■	■		■			■			■				
RAK-ST.1300P-M				■	120...130	700	■		■	■	■	■		■	43	100			■	■		■			■			■				
RAK-TB.1400S-M			■		45...60	700	■		■	■	■			■	43		■		■	■		■			■			■				■
RAK-TB.1410B-M			■		50...70	700	■		■	■	■			■	43	100	■		■	■		■			■			■				
RAK-TB.1420S-M			■		65...80	700	■		■	■	■			■	43		■		■	■		■			■			■				
RAK-TR.1000B-H	■				15...95	700	■		■	■	■	■		■	43	100	■		■	■		■		■			■	■	■	■	
RAK-TR.1000S-H	■				15...95	700	■		■	■	■	■		■	43		■		■	■		■		■			■	■	■	■	
RAK-TR.1210B-H	■				15...82	700	■		■	■	■	■	■	■	43	100	■		■	■		■		■			■	■	■	■	
RAK-TW.1000B-H		■			15...95	700	■		■	■	■	■		■	43	100	■		■	■		■		■			■	■	■	■	
RAK-TW.1000S-H		■			15...95	700	■		■	■	■	■		■	43		■		■	■		■		■			■	■	■	■	
RAK-TW.1200B-H		■			40...120	700	■		■	■	■	■		■	43	100	■		■	■		■		■				■	■	■	
RAK-TW.1200S-H		■			40...120	700	■		■	■	■	■		■	43		■		■	■		■		■				■	■	■	
RAK-TW.5000S-H [3]		■			65...5	1600	■		■	■	■	nr	nr	■	43		■		■	■		■		■		■	■				
RAK-TW.5010S-H [3]		■			50...-10	1600	■		■	■	■	nr	nr	■	43		■		■	■		■		■		■	■				
RAK-TW.5000HS [3]		■			65...5	1600		■	■		■	nr	nr		65		■		■	■		■		■		■	■				
RAK-TW.1200HP		■			40...120	700		■	■		■	■			65	100	■		■	■		■		■				■	■	■	
RAK-TW.1000HB		■			15...95	700		■	■		■	■			65	100	■		■	■		■		■			■	■	■	■	
RAK-ST.1600MP				■	95...130	700		■	■		■	■			54	100			■	■		■			■			■				
RAK-ST.1385M				■	40...70	700		■	■		■	■			54				■	■		■			■			■				
RAZ-ST.011FP-J	■			■	TR: 15...95 STB: 100	700	■		■	■	■	■	■	■	43	100			■			■		■	■			■				
RAZ-ST.030FP-J	■			■	TR: 15...95 STB: 110	700	■		■	■	■	■		■	43	100			■			■		■	■			■				
RAM-TR.2000M	■				0...90			■	■					■	40			■		■				■	■			■	■		
RAM-TW.2000M		■			0...90			■	■					■	40			■		■					■			■	■		
RAZ-ST.1510P-J	■			■	TR: 15...95 STB: 90...110	700	■		■	■	■	■		■	43	100			■			■		■	■			■				
RAZ-ST.1500P-J	■			■	TR: 15...95 STB: 120...130	700	■		■	■	■	■		■	43	100			■			■		■	■			■				
RAZ-TW.1000P-J	■	■			TR: 15...95 STB: 15...95	700	■		■	■	■	■		■	43	100			■			■		■				■				
RAZ-TW.1200P-J	■	■			TR: 40...120 STB: 40...120	700	■		■	■	■	■		■	43	100			■			■		■				■				
TKM2		■			20...110	-	10 (2) A		■						54	200			■					■			■					
TKM2D [2]		■			-10...35	2400	10 (2) A		■						54				■			■		■			■	■	■	■	
TTM2D [2]		■			-10...80	-	10 (2) A		■						54	150						■		■			■	■	■	■	■
TTW2D [2]		■			20...150	-	10 (2) A		■						54	150						■		■			■	■	■	■	■
RYT182	Change-over thermostat 30 °C, 19 °C					-	3 A		■						54			■						■							
QAF63.2 [1]	Sensor				0...15	2000	refer to data sheet		■	nr	nr	nr	nr		42						■					■					
QAF63.6 [1]	Sensor				0...15	6000	refer to data sheet		■	nr	nr	nr	nr		42						■					■					
QAF64.2 [1]		■	■		0...15	2000	refer to data sheet		■	nr	nr	nr	nr		42						■			■	■	■	■				
QAF64.6 [1]		■	■		0...15	6000	refer to data sheet		■	nr	nr	nr	nr		42						■			■	■	■	■				
QAF81.3		■			-5...15	3000	10 (2) A		■	nr	nr	nr	nr		54						■			■		■	■				
QAF81.6		■			-5...15	6000	10 (2) A		■	nr	nr	nr	nr		54						■			■		■	■				
QAF81.6M			■		-5...15	6000	10 (2) A		■	nr	nr	nr	nr		54						■				■	■					
QAF65.3-J		■			-5...15	3000	16 (4) A		■		nr	nr	nr		43						■		■	■							
TRG2 [2]	■				-5...50	-	10 (2) A		■						54								■	■			■				
TRG22	■				-5...50	-	10 (2) A		■						54								■	■			■				
RAG-TW.1 [5]	■				40...230	700	16 (2) A		■	■		■		■	43	100						■		■				■			
RAG-ST.1 [5]				■	40...230	700	16 (2) A		■	■		■		■	43	100						■		■	■			■			

[1] Electronic frost protection unit with 0...10 V (0...15 °C) output signal / manual or automatic reset function
[2] With variable switching differential TKM2D: 2...6 K; TTM / TTW: 2...12 K; TRG2: 0,7..6 K
[3] An ALT-AB200 protection pocket is generally used for ductwork
[4] This field should not be considered complete or all encompassing. Various other applications are possible.
nr) not required
[5] Flue gas thermostat

Electromechanical room thermostats RAA..1..

2-position controller for controlling the room temperature. The required temperature is adjusted with the setting knob on the front of the unit.
- Gas-filled diaphragm
- Color of housing front and baseplate: signal white RAL9003 (NCS S 0502-G)

Setpoint setting range	8...30 °C
Switching differential	≤1 K
Switching voltage	AC 24...250 V
Switching current	0.2...6 (2) A

Electromechanical room thermostat, public sector model RAA11

- Heating only or cooling only
- No operating elements on the front of the unit

Data sheet	N3561
Dimensions (W x H x D)	96 x 97 x 36 mm

Stock No.	Product No.
S55770-T219	RAA11

Electromechanical room thermostat, basic model RAA21

- Heating only or cooling only
- Setpoint adjustment with knob

Data sheet	N3562
Dimensions (W x H x D)	96 x 97 x 35.3 mm

Stock No.	Product No.
S55770-T220	RAA21

Electromechanical room thermostat, large model RAA200

- Heating or cooling
- Specific large housing and setpoint knob

Data sheet	N3002
Dimensions (W x H x D)	105 x 124 x 44 mm

Stock No.	Product No.
BPZ:RAA200	**RAA200**

NEW PRODUCT

Autonomous room thermostats
For heating and/or cooling systems - Standard RAA..1.. / RCU..

RAA31

Electromechanical room thermostat with on/off switch

- Heating only or cooling only
- Setpoint adjustment with knob
- On / off switch

Data sheet	N3563
Dimensions (W x H x D)	96 x 97 x 35.3 mm

Stock No.	Product No.
S55770-T221	RAA31

RAA31.16

Electromechanical room thermostat with on/off switch and LED

Same functionality as RAA31 plus mode indication (red LED, needed AC 230 V)

Data sheet	N3563
Operating voltage	AC 230 V
Power consumption	0.5 VA
Dimensions (W x H x D)	98 x 97 x 35.3 mm

Stock No.	Product No.
S55770-T222	RAA31.16

RAA31.26

Electromechanical room thermostat with on/off switch and LED, auxillary switch and LED

Same functionality as RAA31 plus 2 mode indications (red LED, needed AC 230 V) and additional independent on / off switch.

Data sheet	N3563
Operating voltage	AC 230 V
Power consumption	0.5 VA
Dimensions (W x H x D)	99 x 110 x 35.3 mm

Stock No.	Product No.
S55770-T223	RAA31.26

RAA41

Electromechanical room thermostat with selector heating/off/cooling, 1 output

- Heating or cooling
- Setpoint adjustment with knob
- Switch for cooling / off / heating

Data sheet	N3564
Dimensions (W x H x D)	98 x 97 x 35.3 mm

Stock No.	Product No.
S55770-T224	RAA41

Accessories for RAA..1..

Product Title	Stock No.	Product No.
Mounting plate 120 x 120 mm for 4 x 4" housing	BPZ:ARG70	**ARG70**
Mounting plate 96 x 120 mm for 2 x 4" housing	BPZ:ARG70.1	**ARG70.1**
Mounting plate 112 x 130 mm for surface wiring	BPZ:ARG70.2	**ARG70.2**

Universal room temperature controllers for heating and cooling systems — RCU.. Universal

- Electronic room temperature controller for heating and cooling operation
- PI control
- Operating mode changeover input for remote control
- Color of housing front: signal white RAL9003 (NCS S 0502-G)
- Color of baseplate: light grey RAL7035 (NCS 2801-Y43R)

Setpoint setting range	8...30 °C
Dimensions (W x H x D)	97 x 114 x 43 mm

Universal room temperature controller for 4-pipe systems, AC 230 V, positioning signal 2 pt or PWM — RCU10

- Heating and cooling sequence
- 2nd heating sequence
- Selectable P-band
  (1 K heating, 0.5 K cooling, or 4 K heating, 2 K cooling)
- Selectable dead zone (2 K or 5 K)
- Frost protection function

Data sheet	N3041
Operating voltage	AC 230 V
Triac outputs	PWM or ON/OFF
Triac output, switching voltage	AC 230 V
Triac output, switching current	0.02...1 A

	Stock No.	Product No.
	BPZ:RCU10	**RCU10**

Universal room temperature controller for 4-pipe systems, AC 24 V, positioning signal 2 pt or PWM — RCU15

Same functionality and technical data as RCU10

In addition:
- Optional control depending on the room or return air temperature (with sensor QAH11.1)

Data sheet	N3048
Operating voltage	AC 24 V
Triac outputs	PWM or ON/OFF
Triac output, switching voltage	AC 24 V
Triac output, switching current	0.02...1 A

	Stock No.	Product No.
	BPZ:RCU15	**RCU15**

Autonomous room thermostats
For heating and/or cooling systems - Standard RAA..1.. / RCU..

RCU20

Universal room temperature controller for 2-pipe systems, AC 230 V, positioning signal 3 pt

- Heating or cooling sequence
- Automatic heating / cooling changeover (with sensor QAH11.1)
- Fixed P-band (4 K heating, 2 K cooling)
- 3-position positioning signal output

Data sheet	N3042
Operating voltage	AC 230 V
Triac output, switching voltage	AC 230 V
Triac output, switching current	0.02...1 A
Triac outputs	3-position

	Stock No.	Product No.
	BPZ:RCU20	**RCU20**

5

Accessories for RCU..

Product Title	Stock No.	Product No.
Mounting plate 120 x 120 mm for 4 x 4" housing	BPZ:ARG70	**ARG70**
Mounting plate 96 x 120 mm for 2 x 4" housing	BPZ:ARG70.1	**ARG70.1**
Mounting plate 112 x 130 mm for surface wiring	BPZ:ARG70.2	**ARG70.2**

Room temperature controllers, 1 NC contact — 5TC9 200

- Standard version with nighttime reduction
- For electric and warm water convectors, pumps and tank control
- The temperature controller operates as two-position controller with thermal feedback
- If the temperature on the bimetal increases and the setpoint value is reached, the NC contact (heating contact) switches off
- If the temperature on the bimetal sinks below the setpoint value minus the hysteresis, the NC contact switches back on
- Activation of the temperature reduction lowers the temperature range by approx. 5 K
- With screwless terminals

Setpoint setting range	5...30 °C
Switch-off point	5...30 °C
Sensing element, temperature	Bimetal
Digital outputs	1-pin Potential-free NC contact
Digital output, switching voltage	AC 250 V
Digital output, switching current	10 (4) A
Mounting	For screw fixing Flush or wall-mounted conduit box
Degree of protection	IP30
Dimensions (W x H x D)	50 x 50 x 39 mm

Stock No.	Product No.
5TC9200	**5TC9 200**

Room temperature controllers, 1 CO contact — 5TC9 201

- Standard version
- For electric and warm water convectors, pumps and tank control
- The temperature controller operates as two-position controller with thermal feedback
- If the temperature on the bimetal increases and the setpoint value is reached, the NC contact (heating contact) switches off and the NO contact (cooling contact) closes
- If the temperature on the bimetal sinks below the setpoint value minus the hysteresis, the NC contact switches back on
- With screwless terminals

Setpoint setting range	5...30 °C
Switch-off point	5...30 °C
Sensing element, temperature	Bimetal
Digital outputs	1-pin Potential-free CO contact
Digital output, switching voltage	AC 250 V
Digital output, switching current	10 (4) A
Mounting	For screw fixing Flush or wall-mounted conduit box
Degree of protection	IP30
Dimensions (W x H x D)	50 x 50 x 39 mm

Stock No.	Product No.
5TC9201	**5TC9 201**

Autonomous room thermostats
For heating and/or cooling systems - Standard 5TC92..

5TC9 202

Room temperature controllers, 3-position switch

- With 3-position switches: automatic timing, constant day temperature, constant nighttime reduction
- For electric and warm water convectors, pumps and tank control
- The S1 switch can be used to preselect between time/day and night to control temperature reduction
- The temperature controller operates as two-position controller with thermal feedback
- If the temperature on the bimetal increases and the setpoint value is reached, the NC contact (heating contact) switches off
- If the temperature on the bimetal sinks below the setpoint value minus the hysteresis, the NC contact switches back on
- Activation of the temperature reduction lowers the temperature range by approx. 5 K
- With screwless terminals

Setpoint setting range	5...30 °C
Switch-off point	5...30 °C
Sensing element, temperature	Bimetal
Digital outputs	1-pin Potential-free NC contact
Digital output, switching voltage	AC 250 V
Digital output, switching current	10 (4) A
Mounting	For screw fixing Flush or wall-mounted conduit box
Degree of protection	IP30
Dimensions (W x H x D)	50 x 50 x 39 mm

Stock No.	Product No.
5TC9202	**5TC9 202**

5TC9 203

Room temperature controllers, direct floor heating

- With remote sensor
- Switch contact, NO contact
- For controlling floor storage heating and electric floor heating with heat mats
- The basic controller type comprises two parts: control device (for setting the required floor temperature) and remote sensor (in the floor for monitoring the set temperature)
- The rotary button lets you set the required floor temperature
- If the temperature falls below the set value, the control device demands heat, which is also visually indicated by a red LED
- A nighttime reduction can be activated over the connection (time switch), this is indicated by a green LED
- The temperature reduction is approx. 5 °C
- With screwless terminals

Setpoint setting range	10...50 °C
Switch-off point	10...50 °C
Sensing element, temperature	Bimetal
Digital outputs	1-pin Potential-free NO contact
Digital output, switching voltage	AC 250 V
Digital output, switching current	10 (4) A
Mounting	For screw fixing Flush or wall-mounted conduit box
Degree of protection	IP30
Dimensions (W x H x D)	50 x 50 x 39 mm

Stock No.	Product No.
5TC9203	**5TC9 203**

Cover plates for room temperature controllers, NC/CO — 5TC9 2..01

Cover plates for room temperature controllers:
- With rotary button to set the temperature

Degree of protection	IP20
Dimensions (W x H x D)	55 x 55 x 13 mm

Range overview 5TC92..01

Color	Stock No.	Product No.
Electro white	5TC9220	**5TC9 220**
Titanium white	5TC9221	**5TC9 221**
Aluminum metallic	5TC9250	**5TC9 250**
Carbon metallic	5TC9251	**5TC9 251**

5

Cover plates for room temperature controllers, 3-position switch — 5TC9 2..02

Cover plates for room temperature controllers:
- With rotary button to set the temperature
- With 3-position switch, possible positions: Automatic timing, Constant day temperature, Constant nighttime reduction

Degree of protection	IP20
Dimensions (W x H x D)	55 x 55 x 13 mm

Range overview 5TC92..02

Color	Stock No.	Product No.
Titanium white	5TC9223	**5TC9 223**
Aluminum metallic	5TC9252	**5TC9 252**
Carbon metallic	5TC9253	**5TC9 253**
Electro white	5TC9222	**5TC9 222**

Cover plates for room temperature controllers, direct floor heating — 5TC9 2..03

Cover plates for room temperature controllers:
- With rotary button to set the temperature
- With On/Off switch
- Nighttime reduction indicated by a green LED
- Heating indicated by a red LED

Degree of protection	IP20
Dimensions (W x H x D)	55 x 55 x 13 mm

Range overview 5TC92..03

Color	Stock No.	Product No.
Titanium white	5TC9225	**5TC9 225**
Aluminum metallic	5TC9254	**5TC9 254**
Carbon metallic	5TC9255	**5TC9 255**
Electro white	5TC9224	**5TC9 224**

Autonomous room thermostats
For heating and/or cooling systems - with display: RDD.. / RDH..

RDD..

Simple electronic room temperature controllers with LCD

- 2-position control with on / off positioning signal output for heating
- Operating modes: Normal operation and energy saving mode
- Automatic operating mode changeover as an option
- Color of housing front: signal white RAL9003 (NCS S 0502-G)
- Color of baseplate: light grey RAL7035 (NCS 2801-Y43R)

Setpoint setting range	5...35 °C
Switching differential	1 K
Relay outputs	Change-over contact, potential-free
Relay output, switching current	5 (2) A

RDD10

Simple electronic room temperature controller with LCD

Data sheet	N3031
Operating voltage	AC 230 V
Relay output, switching voltage	AC 230 V
Dimensions (W x H x D)	96 x 119 x 24 mm

Stock No.	Product No.
BPZ:RDD10	**RDD10**

RDD10.1

Simple electronic room temperature controller with LCD

Data sheet	N3031
Voltage supply	Micro (2xAAA)
Operating voltage	DC 3 V
Relay output, switching voltage	AC 24...250 V
Dimensions (W x H x D)	96 x 119 x 24 mm

Stock No.	Product No.
BPZ:RDD10.1	**RDD10.1**

RDD10.1DHW

Simple electronic room temperature controller with LCD and DHW control

- 2-position control with on / off positioning signal output for heating
- Operating modes: Normal operation, energy saving mode and frostprotection
- Independent ON / OFF control for "Domestic Hot Water" boiler or equipment

Data sheet	N3033
Voltage supply	Mignon (2xAA)
Operating voltage	DC 3 V
Relay output, switching voltage	AC 24...250 V
Dimensions (W x H x D)	102 x 128 x 30 mm

Stock No.	Product No.
BPZ:RDD10.1DHW	**RDD10.1DHW**

Semi flush-mounted room temperature controllers with LCD

RDD310

- Operating voltage AC 230 V
- 2-position control with On / Off control output
- Input for an external temperature sensor (QAH11.1 / QAA32)
- Temperature limitation function for heating, controlled by external temperature sensor (optional)
- Operating modes: Comfort, Energy Saving and Frost Protection
- Manual changeover of current operating mode
- Maximum and minimum setpoint limitation
- Backlit LCD
- Mounting on recessed rectangular conduit box, fixing center at 60.3mm

Data sheet	N3077
Operating voltage	AC 230 V
Setpoint setting range	5...40 °C
Digital output, switching voltage	AC 230 V
Dimensions (W x H x D)	96 x 119 x 24 mm

Stock No.	Product No.
S55770-T107	**RDD310**

Electronic room temperature controllers, LCD, setting knob

RDH..

Mains independent, battery powered electronic room temperature controller with 2-position output.
The required temperature is adjusted with the large setting knob on the front of the unit.
- Easy operation by large setting knob and large display
- for heating or cooling
- Color of housing front: signal white RAL9003 (NCS S 0502-G)
- Color of baseplate: light grey RAL7035 (NCS 2801-Y43R)

Voltage supply	Mignon (2xAA)
Operating voltage	DC 3 V
Battery life	1 year
Setpoint setting range	5...30 °C
Relay outputs, number	1
Relay outputs	Change-over contact, potential-free
Relay output, switching voltage	24...250 V
Relay output, switching current	0.2...5 (2) A
Switching differential	1 K
Dimensions (W x H x D)	120 x 90 x 35 mm

Range overview RDH..

Product Title	Data sheet	Stock No.	Product No.
Room temperature controller, LCD, setting knob	N3069	BPZ:RDH10	**RDH10**
Room temperature controller radio frequency set (transmitter and receiver), LCD, setting knob	N3070	BPZ:RDH10RF/SET	**RDH10RF/SET**

Autonomous room thermostats
For heating and/or cooling systems - with display: RDD.. / RDH..

Accessories for RDD.. and RDH..

Product Title	Stock No.	Product No.
Mounting plate 120 x 120 mm for 4 x 4" housing	BPZ:ARG70	**ARG70**
Mounting plate 96 x 120 mm for 2 x 4" housing	BPZ:ARG70.1	**ARG70.1**
Mounting plate 112 x 130 mm for surface wiring	BPZ:ARG70.2	**ARG70.2**
High current switching relay, maximum 16 A resistive	BPZ:SEZ16	**SEZ16**
Conduit box	S55770-T137	**ARG71**

Electronic room temperature controllers with time switch, LCD and selection slider

REV..

Mains-independent, battery-operated room temperature controllers featuring user-friendly operation, easy-to-read display and large numbers
- Self-learning two-position controller with PID response (REV13.., REV17.., REV24..)
- 3-position controller with PI response (for REV34..)
- Remote operation (REV13.., REV17.., REV24, REV24DC, REV34..)
- Override button
- Sensor calibration and reset function
- Frost protection function and minimum limitation of setpoint
- Color of housing front: signal white RAL9003 (NCS S 0502-G)
- Color of baseplate: grey RAL7038

Operating mode selection:
- Automatic modes with time switch program
- Automatic mode with one or two heating phases (REV13..)
- Automatic mode with up to three comfort phases (REV17.., REV24.., REV34..)
- Exception day mode with up to three comfort phases (REV17.., REV24.., REV34..)
- Continuous comfort mode
- Continuous energy saving mode
- Frost protection

Operating voltage	DC 3 V
Battery life	2 years
Setpoint setting range	3...35 °C
Relay output, switching voltage	AC 24...250 V
Relay output, switching current	0.1...6 (2.5) A For RF versions: 0.2...16 (2) A

Autonomous room thermostats
For heating and/or cooling systems - with time clock: REV.. / RDJ.. / RDE.. / RAV.. / REA..

Range overview REV.. Slider

Product Title	Dimensions (H x W x D) [mm]	Data sheet	Stock No.	Product No.
Room temperature controller with 2-point control and 24-hour time switch, batteries, only heating	130 x 94 x 30	N2201	BPZ:REV13	**REV13**
Room temperature controller with 2-point control and 24-hour time switch, batteries, only heating, receive time signal DCF77	130 x 94 x 30	N2201	BPZ:REV13DC	**REV13DC**
Room temperature controller with 2-point control and 7-day time switch, batteries, only heating	134.5 x 94 x 30	N2203	BPZ:REV17	**REV17**
Room temperature controller with 2-point control and 7-day time switch, batteries, only heating, receive time signal DCF77	134.5 x 94 x 30	N2203	BPZ:REV17DC	**REV17DC**
Room temperature controller with 2-point control and 7-day time switch, batteries, heating and cooling	134.5 x 94 x 30	N2205	BPZ:REV24	**REV24**
Room temperature controller with 2-point control and 7-day time switch, batteries, heating and cooling, receive time signal DCF77	134.5 x 94 x 30	N2205	BPZ:REV24DC	**REV24DC**
Room temperature controller with 2-point control and 7-day time switch, receiver with relay outputs (RF set), batteries, heating or cooling, receive time signal DCF77	134.5 x 94 x 30	N2206	BPZ:REV24RFDC/SET	**REV24RFDC/SET**
Room temperature controller with 2-point control and 7-day time switch, receiver with relay outputs (RF set), batteries, heating or cooling	134.5 x 94 x 30	N2206	BPZ:REV24RF/SET	**REV24RF/SET**
Room temperature controller with 3-point control and with 7-day time switch, batteries, only heating	134.5 x 94 x 30	N2208	BPZ:REV34	**REV34**
Room temperature controller with 3-point control and with 7-day time switch, batteries, only heating, receive time signal DCF77	134.5 x 94 x 30	N2208	BPZ:REV34DC	**REV34DC**

Electronic room temperature controllers with time switch and LCD touch screen

REV100/200/300..

- Mains-independent, electronic PID controller with 2-position output, battery-powered
- Self-explanatory touch screen
- Programmable with digital 24-hour or 7-day time switch
- Self-learning 2-position controller with PID control (patented)
- Remote operation (REV100.., REV200, REV300)
- Override button
- Sensor calibration and reset function
- Locking of display to facilitate cleaning or to prevent tampering
- Frost protection function and minimum limitation of setpoint

Operating modes:
- Automatic mode with up to 2 heating periods per day (REV100..)
- Automatic modes with up to 3 comfort periods per day (REV200.., REV300)
- Continuous Comfort mode
- Continuous Economy mode
- Standby with frost protection

Voltage supply	Mignon (2xAA)
Operating voltage	DC 3 V
Setpoint setting range	3...29 °C
Relay output, switching voltage	AC 24...250 V
Relay output, switching current	8 (3.5) A

Range overview REV.. Touch screen

Product Title	Dimensions (W x H x D) [mm]	Data sheet	Stock No.	Product No.
Room temperature controller with 2-point control and 24-hour time switch, batteries, housing signal white	120 x 98 x 31	N2211	BPZ:REV100	**REV100**
Room temperature controller with 2-point control and 7-day time switch, batteries, housing signal white	130 x 110 x 33	N2212	BPZ:REV200	**REV200**
Room temperature controller with 2-point control and 7-day time switch, receiver with relay outputs (RF set), batteries, housing signal white		N2214	BPZ:REV200RF/SET	**REV200RF/SET**
Room temperature controller with 3-point control and with 7-day time switch, batteries, housing signal white	130 x 110 x 33	N2213	BPZ:REV300	**REV300**

Autonomous room thermostats
For heating and/or cooling systems - with time clock: REV.. / RDJ.. / RDE.. / RAV.. / REA..

RDJ..

Electronic room temperature controllers with 24-hour time switch, LCD, setting knob

Mains independent, battery powered electronic room temperature controller with 2-position output. The required temperature is adjusted with the large setting knob on the front of the unit.
- Easy operation by large setting knob and large display
- for heating or cooling
- Color of housing front: signal white RAL9003 (NCS S 0502-G)
- Color of baseplate: light grey RAL7035 (NCS 2801-Y43R)

Voltage supply	Mignon (2xAA)
Operating voltage	DC 3 V
Battery life	1 year
Setpoint setting range	5...30 °C
Relay outputs	Change-over contact, potential-free
Relay output, switching voltage	AC 24...250 V
Relay output, switching current	0.2...5 (2) A
Relay outputs, number	1
Switching differential	1 K
Dimensions (W x H x D)	120 x 90 x 35 mm

5

Range overview RDJ..

Product Title	Data sheet	Stock No.	Product No.
Room temperature controller with 24-hour time switch, LCD, setting knob	N3071	BPZ:RDJ10	**RDJ10**
Room temperature controller radio frequency set (transmitter and receiver) with 24-hour time switch, LCD, setting knob	N3072	BPZ:RDJ10RF/SET	**RDJ10RF/SET**

Accessories for RDJ..

Product Title	Stock No.	Product No.
Mounting plate 120 x 120 mm for 4 x 4" housing	BPZ:ARG70	**ARG70**

RDE..

Electronic room temperature controller with 7-day time switch and LCD

- 2-position control with on/off output for heating
- Operating modes: Normal and energy-saving mode
- Programmable 7-day time switch and manual operation
- Color of housing front: signal white RAL9003 (NCS S 0502-G)
- Color of baseplate: light grey RAL7035 (NCS 2801-Y43R)

Setpoint setting range	5...35 °C
Switching differential	1 K
Dimensions (W x H x D)	119 x 96 x 24 mm

RDE10

Room temperature controller with 7-day time switch and LCD

Data sheet	N3035
Operating voltage	AC 230 V
Relay output, switching voltage	AC 230 V
Relay output, switching current	5 (2) A
Relay outputs	Change-over contact, potential-free

Stock No.	Product No.
BPZ:RDE10	**RDE10**

Room temperature controller with 7-day time switch and LCD — RDE10.1

Data sheet	N3035
Voltage supply	Micro (2xAAA)
Operating voltage	DC 3 V
Relay output, switching voltage	AC 24...250 V
Relay output, switching current	5 (2) A
Relay outputs	Change-over contact, potential-free

Stock No.	Product No.
BPZ:RDE10.1	**RDE10.1**

Room temperature controller with 7-day time switch, LCD and DHW control — RDE10.1DHW

- 2-position control with ON / OFF output for heating
- Independent ON / OFF control of DHW
- Operating modes: Auto, normal operation, energy saving and frost protection
- 7-day time switch and manual control

Data sheet	N3038
Voltage supply	Mignon (2xAA)
Operating voltage	DC 3 V
Relay output, switching voltage	AC 24...250 V
Relay output, switching current	5 (2) A
Relay outputs	Change-over contacts, potential-free
Switching differential	1 K

Stock No.	Product No.
BPZ:RDE10.1DHW	**RDE10.1DHW**

Room temperature controller with 7-day time switch and LCD — RDE20.1

Same functionality and technical data as RDE10.1, but with connection facility for external QAH11 sensor.

Data sheet	N3036
Voltage supply	Micro (2xAAA)
Operating voltage	DC 3 V
Relay output, switching voltage	AC 24...250 V
Relay output, switching current	5 (2) A
Relay outputs	Change-over contact, potential-free

Stock No.	Product No.
BPZ:RDE20.1	**RDE20.1**

Autonomous room thermostats
For heating and/or cooling systems - with time clock: REV.. / RDJ.. / RDE.. / RAV.. / REA..

RDE410

Semi flush-mounted room temperature controllers with LCD

- Operating voltage AC 230 V
- 2-position control with On / Off control output
- Input for an external temperature sensor (QAH11.1 / QAA32)
- Temperature limitation function for heating, controlled by external temperature sensor (optional)
- Operating modes: Comfort, Energy Saving and Frost Protection
- Manual changeover of current operating mode
- Maximum and minimum setpoint limitation
- Backlit LCD
- Mounting on recessed rectangular conduit box, fixing center at 60.3mm
- Auto Timer mode with 8 programmable timers

Data sheet	N3077
Operating voltage	AC 230 V
Setpoint setting range	5...40 °C
Digital output, switching voltage	AC 230 V
Dimensions (W x H x D)	96 x 119 x 24 mm

Stock No.	Product No.
S55770-T108	**RDE410**

5

Accessories for RDE..

Product Title	Stock No.	Product No.
Mounting plate 120 x 120 mm for 4 x 4" housing	BPZ:ARG70	**ARG70**
Mounting plate 96 x 120 mm for 2 x 4" housing	BPZ:ARG70.1	**ARG70.1**
Mounting plate 112 x 130 mm for surface wiring	BPZ:ARG70.2	**ARG70.2**
High current switching relay, maximum 16 A resistive	BPZ:SEZ16	**SEZ16**
Conduit box	S55770-T137	**ARG71**

REV26..

Electronic touch screen room temperature controller with time switch and LCD

- Mains-independent, electronic PID controller with 2-position output, battery-powered
- With digital 7-day time switch
- Version for wall mounting
- Self-learning 2-position controller with PID control (patented)
- Optimum start control for the first heating period
- Selectable operating action: heating or cooling

Operating modes:
- Automatic operation with up to 3 heating or cooling periods per day
- Continuous normal temperature
- Continuous economy temperature
- Standby with frost protection

Data sheet	N2242
Voltage supply	Micro (2xAAA)
Operating voltage	DC 3 V
Battery life	2 years
Setpoint setting range	3...29 °C
Relay outputs	Change-over contact, potential-free
Relay output, switching voltage	AC 24...250 V
Relay output, switching current	6 (2.5) A
Relay outputs, number	1

Range overview REV26..

Product Title	Data sheet	Stock No.	Product No.
Room temperature controller with 2-point control and 7-day time switch, batteries, flush mounted, housing anthracite grey	N2242	BPZ:REV26	**REV26**
Room temperature controller with 2-point control and 7-day time switch, batteries, flush mounted, housing fokker grey	N2242	BPZ:REV26GF-I	**REV26GF-I**

Room temperature controller with 24-hour or 7-day time switch RAV11..

- Mains-independent, electronic PID controller with 2-position output, battery-powered
- With analog 24-hour time switch
- Self-learning 2-position controller with PID control (patented)
- Color of housing front: signal white RAL9003 (NCS S 0502-G)
- Color of baseplate: light grey RAL7035 (NCS 2801-Y43R)

Operating modes:
- 24-hour or 7-day mode with heating periods according to the analog time switch
- Continuous Comfort mode
- Continuous Economy mode
- Stanby with frost protection

Data sheet	N2224
Operating voltage	DC 3 V
Battery life	2.5 years
Setpoint setting range	5...30 °C
Relay outputs	N.O. contact, Potential-free
Relay output, switching voltage	AC 24...250 V
Relay output, switching current	8 (3.5) A
Relay outputs, number	1
Dimensions (W x H x D)	128 x 104 x 37 mm

Range overview RAV11..

Product Title	Data sheet	Stock No.	Product No.
Room temperature controller with 24-hour time switch	N2224	BPZ:RAV11.1	**RAV11.1**
Room temperature controller with 7-day time switch	N2224	BPZ:RAV11.7	**RAV11.7**

Room temperature controller with 7-day time switch and LCD REA23/101

Mains-independent, battery powered electronic room temperature PID controller with two-position output
- "Albatros Design"
- Straightforward, self-explanatory menu selection via rotary selector
- without front cover, without company logo

Data sheet N2216

	Stock No.	Product No.
	BPZ:REA23/101	**REA23/101**

Autonomous room thermostats
For heating and/or cooling systems - with time clock: REV.. / RDJ.. / RDE.. / RAV.. / REA..

REA23M/101

Room temperature controller with 7-day time switch and LCD, OpenTherm Plus compatible

OpenTherm Plus capable electronic room temperature PID controller
- “Albatros Design”
- Straightforward, self-explanatory menu selection via rotary selector
- without front cover, without company logo

Data sheet N2217

	Stock No.	Product No.
	BPZ:REA23M/101	**REA23M/101**

5

Application examples REV..

These are only a few examples of many applications that can be done with the thermostat REV...
More applications are described in "HIT" (the HVAC project engineering tool with a library of over 300 pre-configured HVAC-applications) and in the REV.. data sheet..

Application examples REV..

REV24

HAA001 EV2 HQ

Room temperature controller with 7-day time switch, acting on on/off device

These are only a few examples of many applications that can be done with the thermostat REV...
More applications are described in "HIT" (the HVAC project engineering tool with a library of over 300 pre-configured HVAC-applications) and in the REV.. data sheet..

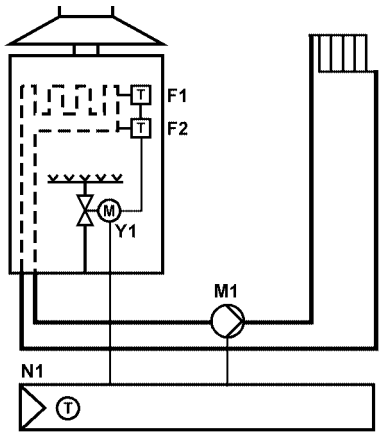

- 7-day time switch programme
- Three different 24-hour operating modes
- Continuous normal temperature mode
- Continuous economy temperature mode
- Standby with frost protection mode
- Holiday mode
- Override mode button
- Sensor calibration
- Installer parameter setting for pump kick and cooling
- Installer parameter setting for optimum start control in the morning
- Installer parameter setting for minimum limitation of set point
- Digital user interface
- Installer choice of algorithm: PID self learning; PID 12; PID 6; or 2-point

Room temperature controller with 7-day time switch, acting on 3-position valve actuator

REV34

H0C002 EV3 HQ

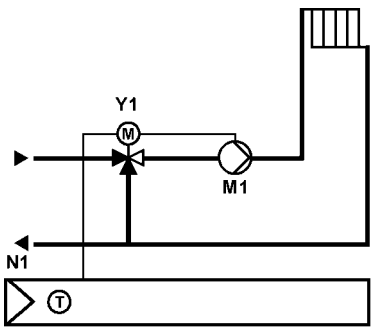

- 3-position controller with PI control
- 7-day time switch programme
- Three different 24-hour operating modes
- Continuous comfort temperature mode
- Continuous economy temperature mode
- Standby with frost protection mode
- Holiday mode
- Override mode button
- Digital user interface
- Sensor calibration
- Installer parameter setting for optimum start control in he morning
- Installer parameter setting for minimum limitation of set point
- Installer parameter setting for room size and heating capacity

Autonomous room thermostats
For fan coil units RAB.. / RCC..

RAB..1..

Electromechanical room thermostats for fan coils

Electromechanical room temperature controllers for fan coil for heating and/or cooling applications. Manual three-speed fan control. The required room temperature is adjusted with the setpoint knob on the front of the unit.
- Gas-filled diaphragm
- 2-position control
- Color of housing front and baseplate: signal white RAL9003 (NCS S 0502-G)

Setpoint setting range	8...30 °C
Switching differential	≤1 K
Switching voltage	AC 250 V
Switching current	0.2...6 (2) A
Dimensions (W x H x D)	99 x 110 x 35.3 mm

RAB11

Electromechanical room thermostat for 2-pipe fan coils, selector heating/cooling

- Heating or cooling applications
- Selector for heating or cooling mode
- Selector for manual 3-speed fan operation
- Manual fan operation or automatic fan operation parallel with the valve can be configured inside the unit

Data sheet N3015

Stock No.	Product No.
S55770-T225	RAB11

RAB11.1

Electromechanical room thermostat for 2-pipe fan coils, selector heating/cooling/fan only

Same functionality and technical data as RAB11. Additional selector position for ventilation (heating and cooling inactive).

Data sheet N3015

Stock No.	Product No.
S55770-T226	RAB11.1

RAB21

Electromechanical room thermostat for 2-pipe fan coils, basic model

- Heating or cooling applications
- Selector for manual 3-speed fan operation
- Changeover function, heating or cooling (with external automatic aquastat)
- Manual fan operation or automatic fan operation parallel with cooling / heating mode can be configured inside the unit

Data sheet N3016

Stock No.	Product No.
S55770-T227	RAB21

Electromechanical room thermostat for 2-pipe fan coils, selector heating-cooling/fan only

RAB21.1

Same functionality and technical data as RAB21. Additional selector for changeover between heating / cooling and ventilation.

Data sheet N3016

Stock No.	Product No.
S55770-T228	RAB21.1

Electromechanical room thermostat for 4-pipe fan coils, selector heating/cooling

RAB31

- Heating or cooling applications
- Selector for heating or cooling mode
- Selector for 3-speed fan operation
- Manual fan operation or automatic fan operation parallel with heating / cooling mode (depending on the selector's position) can be configured inside the unit

Data sheet N3017

Stock No.	Product No.
S55770-T229	RAB31

Electromechanical room thermostat for 4-pipe fan coils, selector heating/cooling/fan only

RAB31.1

Same functionality and technical data as RAB31. Additional selector position for ventilation (heating and cooling inactive).

Data sheet N3017

Stock No.	Product No.
S55770-T230	RAB31.1

Fan speed switch, 3-stage

RAB91

Selector for 3-speed fan operation

Data sheet N3018

Switching voltage AC 24...250 V

Stock No.	Product No.
S55770-T231	RAB91

NEW PRODUCT

Autonomous room thermostats
For fan coil units RAB.. / RCC..

Accessories for RAB..1..

Product Title	Stock No.	Product No.
Mounting plate 120 x 120 mm for 4 x 4" housing	BPZ:ARG70	**ARG70**
Mounting plate 96 x 120 mm for 2 x 4" housing	BPZ:ARG70.1	**ARG70.1**
Mounting plate 112 x 130 mm for surface wiring	BPZ:ARG70.2	**ARG70.2**

RCC..

Electronic room temperature controllers for fan coils

- For heating and cooling applications
- Operating mode selector
- LEDs for indicating the operating state
- Setting knob for room temperature adjustment
- External operating mode changeover contact
- Various operating modes (normal and energy saving mode, etc.)

Setpoint setting range	8...30 °C
Relay output, switching voltage	AC 230 V
Dimensions (W x H x D)	97 x 114 x 43 mm

RCC10

Room temperature controller for 2-pipe fan coils, AC 230 V, positioning signal 2 pt, return air sensor

- Heating or cooling sequence
- Automatic heating/cooling changeover (with sensor QAH11.1)
- Operating mode changeover input for remote control
- Outputs for 3-speed fan (0 / I / II / III)
- 2-position control
- Selectable switching differential
  (1 K heating, 0.5 K cooling, or 4 K heating, 2 K cooling)
- Input for return temperature sensor (QAH11.1)
- Frost protection mode

Data sheet	N3021
Operating voltage	AC 230 V
Relay output, switching voltage	AC 230 V
Relay output, switching current	Fan: 0.1...2.6 A Valve: 0.1...1.3 A
Relay outputs	Fan: 3-position switch with N.O. contacts, non-floating Valve: change-over contact, non-floating

	Stock No.	Product No.
	BPZ:RCC10	**RCC10**

Room temperature controller for 2-pipe fan coils, AC 230 V, positioning signal 2 pt, return air sensor, el. heater

RCC20

- Heating or cooling sequence
- Automatic heating/cooling changeover (with sensor QAH11.1)
- Operating mode changeover input for remote control
- Output for electrical heater
- 2-position control
- Selectable switching differential (1 K heating, 0.5 K cooling, or 4 K heating, 2 K cooling)
- Selectable dead zone (2 K or 5 K)
- Input for return air temperature sensor (QAH11.1)
- Frost protection mode
- Outputs for 3-speed fan (0 / I / II / III)

Data sheet	N3022
Operating voltage	AC 230 V
Relay output, switching voltage	AC 230 V
Relay output, switching current	Fan: 0.1...2.6 A Valve: 0.1...1.3 A Electric heater: 0.1...5.4 A
Relay outputs	Fan: 3-position switch with N.O. contacts, non-floating Valve and electric heater: NO contacts, non-floating

	Stock No.	Product No.
	BPZ:RCC20	**RCC20**

Room temperature controller for 4-pipe fan coils, AC 230 V, positioning signal 2 2 pt, return air sensor

RCC30

- Heating and cooling sequence
- Operating mode changeover input for remote control
- 2-position control
- Selectable switching differential (1 K heating, 0.5 K cooling, or 4 K heating, 2 K cooling)
- Input for return air temperature sensor (QAH11.1)
- Frost protection mode
- Selectable dead zone (2 K or 5 K)
- Outputs for 3-speed fan (0 / I / II / III)

Data sheet	N3023
Operating voltage	AC 230 V
Relay output, switching voltage	AC 230 V
Relay output, switching current	Fan: 0.1...2.6 A Valve: 0.1...1.3 A
Relay outputs	Fan: 3-position switch with N.O. contacts Valve: N.O. contacts, non-floating

	Stock No.	Product No.
	BPZ:RCC30	**RCC30**

Field devices for RCC..

Product Title	Data sheet	Stock No.	Product No.
Cable temperature sensor PVC 2.5 m, NTC 3 kOhm, with connectors 2.8 x 0.8 mm	N1840	BPZ:QAH11	**QAH11**
Changeover cable holder for QAH11..	N1840	BPZ:ARG86.3	**ARG86.3**

Application examples RAB..

These are only a few examples of many applications that can be done with the thermostat RAB...
More applications are described in "HIT" (the HVAC project engineering tool with a library of over 300 pre-configured HVAC-applications) and in the RAB.. data sheet.

RAB11

TAAE01 AB1 HQ

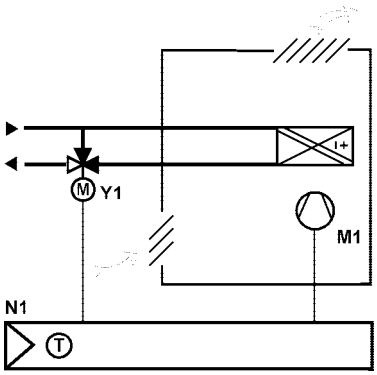

2-pipe fan coil, manual heating / cooling changeover

- 2-position control algorithm for heating or cooling systems
- Setting range of setpoint knob can be limited
- Operating mode selector for heating and cooling
- 4-position fan speed selector (I/II/III/off)

RAB21

TAAE01 AB2 HQ

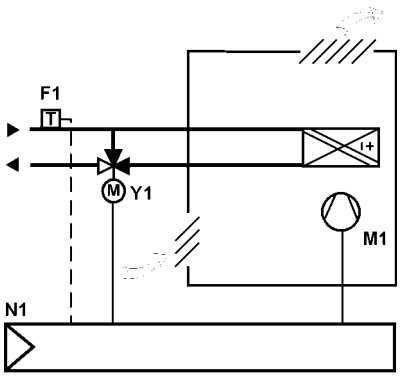

2-pipe fan coil, automatic heating / cooling changeover

- 2-position control for heating or cooling systems
- Setting range of setpoint knob can be limited
- 4-position fan speed selector (I/II/III/off)
- Heating/cooling changeover (aquastat)

Application examples RCC..

These are only a few examples of many applications that can be done with the thermostat RCC...
More applications are described in "HIT" (the HVAC project engineering tool with a library of over 300 pre-configured HVAC-applications) and in the RCC.. data sheet.

2-pipe fan coil, automatic heating / cooling changeover on/off output

RCC10

TAAE01 CC1 HQ

- 2-position control algorithm for heating or cooling systems
- Output for ON/OFF valve actuator
- 4-position fan speed selector (I/II/III/standby)
- Status LED for heating, cooling and fan
- Setting range of setpoint knob can be limited
- Parameter setting by installer for: Fan control, operating mode changeover operating mode switch condition, frost protection, switching differential for heating or cooling
- Automatic heating/cooling changeover with external temperature sensor (QAH11.1)
- Operating mode changeover for remote control with external switch
- Temperature control according to integrated sensor or external temperature sensor QAH11.1 or QAA32)

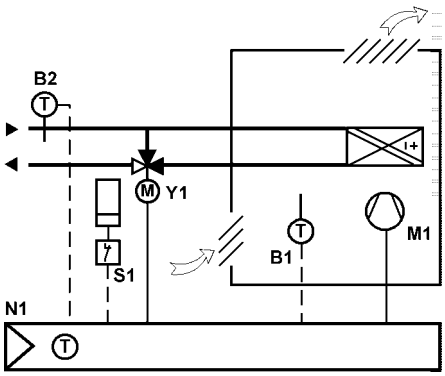

2-pipe fan coil, automatic heating / cooling changeover and electrical heater

RCC20

TAAZ01 CC2 HQ

- 2-position control algorithm for heating or cooling systems
- Outputs for ON/OFF valve actuator and electrical heater
- 4-position fan speed selector (I/II/III/standby)
- Status LED for heating, cooling and fan
- Setting range of setpoint knob can be limited
- Parameter setting by installer for: Fan control, operating mode changeover operating mode switch condition, frost protection, switching differential for heating or cooling, dead zone, setpoint differential, operation of electrical heater in cooling or heating mode
- Automatic heating/cooling changeover with external temperature sensor (QAH11.1)
- Operating mode changeover for remote control withexternal switch
- Temperature control according to integrated sensor or external temperature sensor (QAH11.1 or QAA32)

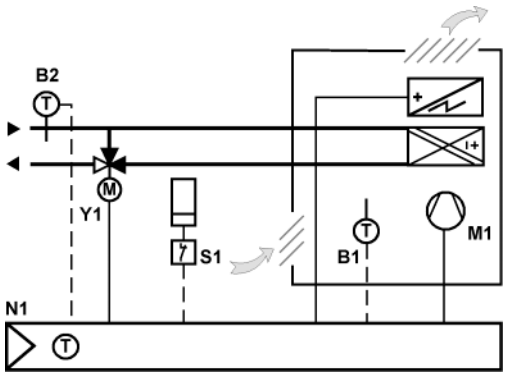

Autonomous room thermostats
For fan coil units RDG1.. / RDF..

5

RDG1..

Room thermostats for fan coil units, universal applications and heat pump applications

- Operating modes: Comfort, Energy Saving and Protection
- 2-position, 3-position, PWM or DC 0...10V control outputs
- Automatic or manual fan speed
- 3 multifunctional inputs for keycard contact, external room / return air temperature, heat / cool changeover, operation mode changeover, window contact on/off, dewpoint monitor, electrical heater enabled, fault contact
- Automatic or manual heating / cooling changeover
- Adjustable commissioning and control parameters
- Minimum and maximum setpoint limitation
- Backlit display

Application selectable:
- 2-pipe system
- 2-pipe system with electrical heater
- 2-pipe system and radiator / floor heating
- 4-pipe system
- 4-pipe system with electrical heater (only RDG100)
- 2-stage heating or cooling system

Data sheet	N3181
Setpoint setting range	5...40 °C
Switching differential	Heating: 0.5...6 K Cooling: 0.5...6 K
Analog inputs, number	2
Digital inputs, number	1
Type of fixing	Wall mounting with screws
Degree of protection	IP30
Dimensions (W x H x D)	93 x 128 x 30.8 mm

RDG100

Room thermostat, AC 230 V, for fan coil units and universal applications

Operating voltage	AC 230 V
Relay outputs, number	3
Relay outputs	Fan: 1- or 3-speed
Relay output, switching voltage	AC 230 V
Relay output, switching current	5 (4) A
Triac outputs, number	3
Triac outputs	Valve, el. heater 2-position, PWM, 3-position
Triac output, switching voltage	AC 230 V
Triac output, switching current	Max. 1 A

Stock No.	Product No.
S55770-T158	**RDG100**

Room thermostat, AC 230 V, for fan coil units and heat pump applications — RDG110

Operating voltage	AC 230 V
Relay outputs, number	5
Relay outputs	Valve, compressor or el. heater: 2 outputs (SPDT), 2-position Fan: 1- or 3-speed
Relay output, switching voltage	AC 230 V
Relay output, switching current	Valve, compressor or el. heater: 5 (3) A Fan: 5 (4) A

Stock No.	Product No.
S55770-T160	**RDG110**

Room thermostat, AC 24 V, for fan coil units and universal applications, analog outputs DC 0...10 V — RDG140

Operating voltage	AC 24 V
Analog outputs, number	2
Analog outputs	Valve, el. heater
Analog output, signal	DC 0...10 V
Analog output, current	Max. ±1 mA
Relay outputs, number	3
Relay outputs	Fan: 1- or 3-speed
Relay output, switching voltage	AC 24...230 V
Relay output, switching current	5 (4) A

Stock No.	Product No.
S55770-T161	**RDG140**

Room thermostat, AC 24 V, for fan coil units and universal applications, analog outputs DC 0...10 V / ECM fan — RDG160

Operating voltage	AC 24 V
Analog outputs, number	3
Analog outputs	Valve, el. heater: 2 Fan: 1 (ECM)
Analog output, signal	DC 0...10 V
Analog output, current	Max. ±1 mA

Stock No.	Product No.
S55770-T162	**RDG160**

Autonomous room thermostats
For fan coil units RDG1.. / RDF..

RDG100T..

Room thermostat, AC 230 V, for fan coil units and universal applications, 7-day time switch

- Operating modes: Auto timer, Comfort, Energy Saving and Protection
- Auto Timer mode with 8 programmable timers
- 2-position, 3-position or PWM control outputs
- Automatic or manual fan speed for 1-speed or 3-speed fan
- 3 multifunctional inputs for keycard contact, external room / return air temperature, heat / cool changeover, operation mode changeover, window contact on/off, dewpoint monitor, electrical heater enabled, fault contact
- Automatic or manual heating / cooling changeover
- Adjustable commissioning and control parameters
- Minimum and maximum setpoint limitation
- Infrared remote control receiver
- Backlit display

Application selectable:
- 2-pipe system
- 2-pipe system with electrical heater
- 2-pipe system and radiator / floor heating
- 4-pipe system
- 4-pipe system with electrical heater
- 2-stage heating or cooling system

Data sheet	N3181
Operating voltage	AC 230 V
Setpoint setting range	5...40 °C
Switching differential	Heating: 0.5...6 K Cooling: 0.5...6 K
Analog inputs, number	2
Digital inputs, number	1
Relay outputs, number	3
Relay outputs	Fan: 1- or 3-speed
Relay output, switching voltage	AC 230 V
Relay output, switching current	5 (4) A
Triac outputs, number	3
Triac outputs	Valve, el. heater 2-position, PWM, 3-position
Triac output, switching current	Max. 1 A
Triac output, switching voltage	AC 230 V
Dimensions (W x H x D)	93 x 128 x 30.8 mm

Range overview RDG100T..

Template attribute	Data sheet	Stock No.	Product No.
Room thermostat, AC 230 V, for fan coil units and universal applications, 7-day time switch, vertical	N3181	S55770-T159	**RDG100T**
Room thermostat, AC 230 V, for fan coil units and universal applications, 7-day time switch, horizontal	N3181	S55770-T235	RDG100T/H

Accessories for RDG1..

Product Title	Data sheet	Stock No.	Product No.
Infrared Remote Control for room thermostats	N3060	S55770-T166	**IRA211**
Mounting plate 120 x 120 mm for 4 x 4" housing	N3009	BPZ:ARG70	**ARG70**
Mounting plate 96 x 120 mm for 2 x 4" housing	N3009	BPZ:ARG70.1	**ARG70.1**
Mounting plate 112 x 130 mm for surface wiring	N3009	BPZ:ARG70.2	**ARG70.2**

NEW PRODUCT

Room temperature controller RDF..

- Electronic room temperature controller with LCD for fan coil units and depending on the type for compressors in DX-type equipment
- For heating and/or cooling applications
- ON/OFF, 3-position or modulating output
- Operating mode changeover input for remote control
- Various operating modes (normal, energy saving and stand-by)
- Outputs for 3-speed fan
- Selectable installation and control parameters
- Color of housing front: signal white RAL9003 (NCS S 0502-G)
- Color of baseplate: light grey RAL7035 (NCS 2801-Y43R)

Operating voltage	AC 230 V
Setpoint setting range	5...40 °C
Relay output, switching voltage	AC 230 V
Relay output, switching current	4 (2) A
Relay outputs	Fan: N.O. contacts, non-floating Valve: change-over contact, non-floating
Dimensions (W x H x D)	102 x 128 x 30 mm

Room temperature controller for 2-pipe fan coils or DX-type equipment, return air temperature sensor RDF110

- Output for an on / off valve actuator or compressor
- Outputs for a 3-speed fan
- Control depending on the room or return air temperature (with sensor QAH11.1)
- 2-position control
- Sensor input either for automatic heating / cooling changeover or return air temperature (with sensor QAH11.1)
- Automatic or manual three-speed fan control
- Operating modes: normal, energy-saving and standby
- Operating mode changeover input for remote control

Data sheet N3057

Stock No.	Product No.
BPZ:RDF110	**RDF110**

Room temperature controller for 2-pipe fan coils or DX-type equipment RDF110.2

- Output for an on / off valve actuator or compressor
- Outputs for a 3-speed fan
- Control depending on the room or return air temperature (with sensor QAH11.1)
- 2-position control
- Manual heating/Cooling change-over
- Automatic or manual three-speed fan control
- Operating modes: normal, energy-saving and standby

Data sheet N3057

Stock No.	Product No.
BPZ:RDF110.2	**RDF110.2**

Autonomous room thermostats
For fan coil units RDG1.. / RDF..

RDF210/IR

Room temperature controller for 2-pipe fan coils or DX-type equipment, return air temperature sensor, infrared remote control, 7-day time switch

Same functionality and technical data as RDF210 and:
- With infrared receiver for remote control; remote control not included

Data sheet N3058

	Stock No.	Product No.
	BPZ:RDF210/IR	**RDF210/IR**

Accessories for RDF..

Product Title	Data sheet	Stock No.	Product No.
Infrared Remote Control for room thermostats	N3060	S55770-T166	**IRA211**
Mounting plate 120 x 120 mm for 4 x 4" housing	N3009	BPZ:ARG70	**ARG70**
Mounting plate 96 x 120 mm for 2 x 4" housing	N3009	BPZ:ARG70.1	**ARG70.1**
Mounting plate 112 x 130 mm for surface wiring	N3009	BPZ:ARG70.2	**ARG70.2**

Semi Flush-mount room temperature controllers

RDF..Semi Flush Mount

Semi Flush Mount room temperature controller with LCD for fan coil units and compressors in DX-type equipment
- For heating and/or cooling applications
- Outputs for 3-speed fan
- Selectable installation and control parameters

Setpoint setting range	5...40 °C
Degree of protection	IP30
Additional info	Conduit box ARG71 for RDF3.., RDF4.., RDF5..

Semi Flush-mount room temperature controller for 2-/4-pipe fan coils or DX type equipment, backlit LCD

RDF600

Semi Flush Mount room temperature controller for round conduit box with LCD for fan coil units and compressors in DX-type equipment
- Backlit display
- 2 or 3-position control outputs
- Output for 1-speed or 3-speed fan
- Two multifunctional inputs for keycard contact, external sensor, etc.
- Operating modes: Comfort, Energy Saving and Protection
- Automatic or manual heating/cooling changeover
- Adjustable commissioning and control parameters
- Minimum and maximum setpoint limitation
- With infrared receiver for remote control, remote control not included.
- Color of housing: signal white (RAL 9003)

Application selectable:
- 2-pipe system
- 2-pipe system with electrical heater
- 4-pipe system

Data sheet	N3076
Operating voltage	AC 230 V
Relay output, switching voltage	AC 230 V
Relay output, switching current	5 (2) A
Relay outputs	Fan: N.O. contacts, non-floating Valve: N.O. contacts, non-floating
Type of fixing	Recessed round conduit box diameter min. 60 mm
Dimensions (W x H x D)	86 x 86 x 46 mm

	Stock No.	Product No.
	S55770-T291	RDF600

NEW PRODUCT

Autonomous room thermostats
For fan coil units RDF.. Semi Flush Mount

RDF300

Semi Flush-mount room temperature controller for 2-/4-pipe fan coils or DX type equipment

Semi Flush Mount room temperature controller with LCD for fan coil units and compressors in DX-type equipment
- 2 or 3-position control outputs
- Output for 3-speed or 1-speed fan
- Two multifunctional inputs for keycard contact, external sensor, etc.
- Operating modes: Comfort, Energy Saving and Protection
- Automatic or manual heating/cooling changeover
- Adjustable commissioning and control parameters
- Minimum and maximum setpoint limitation
- Color of housing: signal white (RAL 9003)

Application selectable:
- 2-pipe system
- 2-pipe system with electrical heater
- 4-pipe system

Data sheet	N3076
Operating voltage	AC 230 V
Relay output, switching voltage	AC 230 V
Relay output, switching current	5 (2) A
Relay outputs	Fan: N.O. contacts, non-floating Valve: N.O. contacts, non-floating
Type of fixing	Recessed rectangular conduit box BS4662 with fixing centres of 60.3 mm
Dimensions (W x H x D)	86 x 86 x 57 mm

Stock No.	Product No.
BPZ:RDF300	**RDF300**

RDF300.02

Semi Flush-mount room temperature controller for 2-/4-pipe fan coils or DX type equipment, backlit LCD

Same functionality and technical data as RDF300 and:
- Backlit display

Data sheet	N3076
Type of fixing	Recessed rectangular conduit box BS4662 with fixing centres of 60.3 mm
Dimensions (W x H x D)	86 x 86 x 57 mm

Stock No.	Product No.
BPZ:RDF300.02	**RDF300.02**

Semi Flush-mount room temperature controller for 2-pipe fan coils or DX type equipment

RDF310.2

Semi Flush Mount room temperature controller with LCD for fan coil units and compressors in DX-type equipment
- 2-position control outputs
- 3-speed fan control: Automatic or manual
- Manual heating / cooling changeover or continuous Cooling only / Heating only
- Operation modes: Comfort and Protection
- Adjustable commissioning and control parameters
- Optional display of room temperature or setpoint
- Minimum and maximum setpoint limitation
- Color of housing: signal white (RAL 9003)

Data sheet	N3067
Operating voltage	AC 230 V
Relay output, switching voltage	AC 230 V
Relay output, switching current	4 (2) A
Relay outputs	Fan: N.O. contacts, non-floating Valve: N.O. contacts, non-floating
Type of fixing	Recessed rectangular conduit box BS4662 with fixing centres of 60.3 mm
Dimensions (W x H x D)	86 x 86 x 39 mm

	Stock No.	Product No.
	BPZ:RDF310.2	**RDF310.2**

Semi Flush-mount room temperature controller for 2-pipe fan coils or DX type equipment, infrared remote control, backlit LCD

RDF310.21

Same functionality and technical data as RDF310.2 and:
- Backlit display
- With infrared receiver for remote control, remote control not included

Data sheet	N3067
Type of fixing	Recessed rectangular conduit box BS4662 with fixing centres of 60.3 mm
Dimensions (W x H x D)	86 x 86 x 39 mm

	Stock No.	Product No.
	BPZ:RDF310.21	**RDF310.21**

Autonomous room thermostats
For fan coil units RDF.. Semi Flush Mount

RDF340

Semi Flush-mount room temperature controller for 2-/4-pipe fan coils

Semi Flush Mount room temperature controller with LCD for fan coil units
- Output for 3-speed or 1-speed fan
- Two multifunctional inputs for keycard contact, external sensor, etc.
- Operating modes: Comfort, Energy Saving and Protection
- Automatic or manual heating/cooling changeover
- Adjustable commissioning and control parameters
- Minimum and maximum setpoint limitation
- Color of housing: signal white (RAL 9003)

Application selectable:
- 2-pipe system
- 2-pipe system with electrical heater
- 4-pipe system

Data sheet	N3076
Operating voltage	AC 24 V
Analog output, signal	DC 0...10 V
Analog outputs	Heating/Cooling
Analog output, current	Max. ±1 mA
Relay output, switching voltage	AC 24...230 V
Relay output, switching current	5 (2) A
Relay outputs	Fan: N.O. contacts, floating
Type of fixing	Recessed rectangular conduit box BS4662 with fixing centres of 60.3 mm
Dimensions (W x H x D)	86 x 86 x 57 mm

Stock No.	Product No.
BPZ:RDF340	**RDF340**

Semi Flush-mount room temperature controller for 2-/4-pipe fan coils or DX type equipment, infrared remote control, 7-day time switch, backlit LCD

RDF600T

Semi Flush Mount room temperature controller for round conduit box with LCD for fan coil units and compressors in DX-type equipment
- Backlit display
- 8 Timers with a 7-day programmable schedule
- 2 or 3-position control outputs
- Output for 1-speed or 3-speed fan
- Two multifunctional inputs for keycard contact, external sensor, etc.
- Operating modes: Comfort, Energy Saving and Protection
- Automatic or manual heating/cooling changeover
- Adjustable commissioning and control parameters
- Minimum and maximum setpoint limitation
- With infrared receiver for remote control, remote control not included.
- Color of housing: signal white (RAL 9003)

Application selectable:
- 2-pipe system
- 2-pipe system with electrical heater
- 4-pipe system

5

Data sheet	N3076
Operating voltage	AC 230 V
Relay output, switching voltage	AC 230 V
Relay output, switching current	5 (2) A
Relay outputs	Fan: N.O. contacts, non-floating Valve: N.O. contacts, non-floating
Type of fixing	Recessed round conduit box diameter min. 60 mm
Dimensions (W x H x D)	86 x 86 x 46 mm

	Stock No.	Product No.
	S55770-T292	RDF600T

NEW PRODUCT

Autonomous room thermostats
For fan coil units RDF.. Semi Flush Mount

RDF400.01

Semi Flush-mount room temperature controller for 2-/4-pipe fan coils or DX type equipment, infrared remote control, 7-day time switch, backlit LCD

Semi Flush Mount room temperature controller with LCD for fan coil units and compressors in DX-type equipment
- Backlit display
- 8 Timers with a 7-day programmable schedule
- 2 or 3-position control outputs
- Output for 1-speed or 3-speed fan
- Two multifunctional inputs for keycard contact, external sensor, etc.
- Operating modes: Comfort, Energy Saving and Protection
- Automatic or manual heating/cooling changeover
- Adjustable commissioning and control parameters
- Minimum and maximum setpoint limitation
- With infrared receiver for remote control, remote control not included.
- Color of housing: signal white (RAL 9003)

Application selectable:
- 2-pipe system
- 2-pipe system with electrical heater
- 4-pipe system

Data sheet	N3076
Operating voltage	AC 230 V
Relay output, switching voltage	AC 230 V
Relay output, switching current	5 (2) A
Relay outputs	Fan: N.O. contacts, non-floating Valve: N.O. contacts, non-floating
Type of fixing	Recessed rectangular conduit box BS4662 with fixing centres of 60.3 mm
Dimensions (W x H x D)	86 x 86 x 57 mm

Stock No.	Product No.
BPZ:RDF400.01	**RDF400.01**

RDF410.21

Semi Flush-mount room temperature controller for 2-pipe fan coils or DX type equipment, infrared remote control, 7-day time switch, backlit LCD

Same functionality and technical data as RDF310.2 and:
- Backlit display
- With infrared receiver for remote control, remote control not included.
- 8 Timers with a 7-day programmable schedule

Data sheet	N3067
Operating voltage	AC 230 V
Relay output, switching voltage	AC 230 V
Relay output, switching current	4 (2) A
Relay outputs	Fan: N.O. contacts, non-floating Valve: N.O. contact, non-floating
Type of fixing	Recessed rectangular conduit box BS4662 with fixing centres of 60.3 mm
Dimensions (W x H x D)	86 x 86 x 39 mm

Stock No.	Product No.
BPZ:RDF410.21	**RDF410.21**

Semi Flush-mount room temperature controller for 2-pipe fan coils or DX type equipment, DELTA lavie design

RDF510.2

Semi Flush Mount room temperature controller with LCD for fan coil units and compressors in DX-type equipment
- 2-position control outputs
- 3-speed fan control: Automatic or manual
- Manual heating / cooling changeover or continuous Cooling only / Heating only
- Operation modes: Comfort and Protection
- Adjustable commissioning and control parameters
- Optional display of room temperature or setpoint
- Minimum and maximum setpoint limitation
- Keypad lock function
- Color of housing: signal white (RAL 9003)

Data sheet	N3064
Operating voltage	AC 230 V
Relay output, switching voltage	AC 230 V
Relay output, switching current	4 (2) A
Relay outputs	Fan: N.O contacts, non-floating Valve: 1 x changeover contact (SPDT), non-floating
Type of fixing	Recessed rectangular conduit box with fixing centres of 60.3 mm
Dimensions (W x H x D)	86 x 86 x 42 mm

	Stock No.	Product No.
	S55770-T189	**RDF510.2**

Accessories for RDF..Semi Flush Mount

Product Title	Data sheet	Stock No.	Product No.
Infrared Remote Control for room thermostats	N3060	S55770-T166	**IRA211**
Mounting plate 82 x 82 x 10 mm	N3009	BPZ:ARG70.3	**ARG70.3**
Conduit box	N3009	S55770-T137	**ARG71**

Conduit box ARG71 for RDF3.., RDF4.., RDF5..

Autonomous room thermostats
For VAV systems: RCU.. / RDG.. / RDU..

RCU..VAV

Electronic room temperature controllers for VAV and CAV systems

- Electronic room temperature controller for heating and cooling operation
- P control
- Setpoint shifting
- On/off, 3-position or modulating outputs
- Color of housing front: signal white RAL9003 (NCS S 0502-G)
- Color of baseplate: light grey RAL7035 (NCS 2801-Y43R)

Operating voltage	AC 24 V
Setpoint setting range	8...30 °C
Analog outputs	Heating or cooling
Analog output, signal	DC 0...10 V
Analog output, current	Max. ±1 mA
Dimensions (W x H x D)	97 x 114 x 43 mm

RCU50

Room temperature controller for VAV and CAV systems, AC 24 V, positioning signal DC 0...10 V

- Heating and cooling sequence
- Automatic heating / cooling changeover (with sensor QAH11.1)
- DC 0...10 V output (max. ±1 mA)
- Operating mode changeover input for remote control
- Adjustable minimum limitation for cooling output
- Active input for setpoint shift
- Normal, energy saving and frost protection mode

Data sheet N3045

Stock No.	Product No.
BPZ:RCU50	**RCU50**

RCU50.2

Room temperature controller for VAV and CAV systems, AC 24 V, positioning signal DC 0...10 V, manual changeover heating/cooling/off

Same functionality and technical data as RCU50
- Manual heating / cooling changeover and OFF position
- Signal inversion of output signal
- No setpoint shift
- No operating mode changeover input for remote control
- No adjustable minimum limitation for cooling output
- No frost protection

Data sheet N3045

Stock No.	Product No.
BPZ:RCU50.2	**RCU50.2**

Room thermostat, AC 24 V, VAV heating and cooling systems

RDG400

- Modulating PI control
- Control depending on the room or the return air temperature
- Output DC 0...10 V for VAV actuator and auxiliary output ON/OFF, PWM or 3-position or 3-position for VAV actuator and auxiliary output DC 0...10 V
- Automatic or manual heating / cooling changeover
- Operating modes: Comfort, Energy Saving and Protection
- 3 multifunctional inputs for keycard contact, external room / return air temperature, heat / cool changeover, operation mode changeover, window contact on/off, dewpoint monitor, electrical heater enabled, fault contact
- Adjustable commissioning and control parameters
- Minimum and maximum setpoint limitation
- Minimum and maximum limitation of air flow signal
- Output signal inversion (DC 0...10 V) as an option
- Backlit display

Application selectable:
- Single-duct system
- Single-duct system with electrical heater
- Single-duct system and radiator / floor heating
- Single-duct system with heating / cooling coil

Data sheet	N3182
Operating voltage	AC 24 V
Control algorithm	P / PI
Setpoint setting range	5...40 °C
Analog inputs, number	2
Digital inputs, number	1
Analog outputs, number	1
Analog outputs	VAV actuator, electric heater
Analog output, signal	DC 0...10 V
Analog output, current	Max. ±1 mA
Triac outputs, number	1
Triac outputs	VAV actuator, valve, el. heater 2-position, PWM, 3-position
Triac output, switching voltage	AC 24 V
Triac output, switching current	Max. 1 A
Type of fixing	Wall mounting with screws
Degree of protection	IP30
Dimensions (W x H x D)	93 x 128 x 30.8 mm

Stock No.	Product No.
S55770-T164	**RDG400**

Autonomous room thermostats
For VAV systems: RCU.. / RDG.. / RDU..

RDU340

Semi Flush-mount room temperature controllers with LCD for VAV application

- Modulating PI control
- Control depending on the room or the return air temperature
- Output for a DC 0...10 V actuator and AC 230V electrical heater (ON-OFF)
- Automatic or manual heating/cooling changeover
- Operating modes: Comfort, Energy Saving and Protection
- 2 multifunctional inputs for keycard contact, external room / return air temperature, heat / cool changeover, operation mode changeover, window contact on/off, dewpoint monitor, electrical heater enabled, fault contact
- Adjustable commissioning and control parameters
- Minimum and maximum setpoint limitation
- Adjustable minimum and maximum limitation for air flow signal DC 0...10V
- Output signal inversion as an option
- Mounting on recessed rectangular conduit box, 60.3 mm fixing centers

Application selectable:
- Single-duct system
- Single-duct system with electrical heater

Data sheet	N3078
Operating voltage	AC 24 V
Setpoint setting range	5...40 °C
Analog inputs, number	2
Analog outputs, number	1
Analog output, signal	DC 0...10 V
Analog output, current	Max. 1 mA
Relay outputs, number	1
Relay outputs	N.O. contact, potential-free
Relay output, switching voltage	AC 230 V
Relay output, switching current	Max. 5 (2) A
Type of fixing	Recessed rectangular conduit box BS4662 with fixing centres of 60.3 mm
Dimensions (W x H x D)	86 x 86 x 57 mm

	Stock No.	Product No.
	BPZ:RDU340	**RDU340**

Accessories for RDU340

Product Title	Data sheet	Stock No.	Product No.
Conduit box	N3009	S55770-T137	**ARG71**

Application examples RDG..

These are only a few examples of many applications that can be done with the room thermostats RDG...
More applications are described in "HIT" (the HVAC project engineering tool with a library of over 300 pre-configured HVAC-applications) and in the RDG.. data sheet

VAV box, automatic heating/cooling changeover with radiator, mod. PI-control, DC 0...10 V for cooling

RDG400

TCCE01 DG4 HQ

- Modulating PI control algorithm for heating and cooling systems
- Outputs for DC 0...10 V and ON/OFF, PWM, 3-postion
- Setting range of setpoint knob can be limited
- Manual operating mode button
- Parameter setting by installer
- Temperature control according to integrated sensor
- Adjustable minimum limitation of cooling output (air flow)
- Operating mode changeover for remote control with external switch/sensor
- Operating voltage AC 24 V
- Backlit display

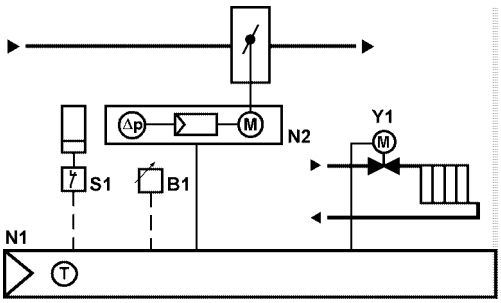

5

Communicative room thermostats
For fan coil units - Communicative KNX thermostat

RDG100KN

Room thermostat with KNX communications, AC 230 V, for fan coil units and universal applications

- Operating modes: Comfort, Economy and Protection
- 2-position, 3-position, PWM or DC control outputs
- Automatic or manual fan speed for 1-speed, 3-speed or EC fan
- 3 multifunctional inputs for keycard contact, external room / return air temperature, heat / cool changeover, operation mode changeover, window contact on/off, dewpoint monitor, electrical heater enabled, fault contact
- Automatic or manual heating / cooling changeover
- Adjustable commissioning and control parameters
- Minimum and maximum setpoint limitation
- Backlit display

Application selectable:
- 2-pipe system
- 2-pipe system with electrical heater
- 2-pipe system and radiator / floor heating
- 4-pipe system
- 4-pipe system with electrical heater (only RDG100KN)
- 2-stage heating or cooling system

5

Data sheet	N3191
Operating voltage	AC 230 V
Switching differential	Heating: 0.5...6 K Cooling: 0.5...6 K
Setpoint setting range	5...40 °C
Analog inputs, number	2
Analog input, signal	NTC 3k Switch
Digital inputs, number	1
Relay outputs, number	3
Relay outputs	Fan: 1- or 3-speed
Relay output, switching voltage	AC 230 V
Relay output, switching current	5 (4) A
Triac outputs, number	3
Triac outputs	Valve, el. heater 2-position, PWM, 3-position
Triac output, switching voltage	AC 230 V
Triac output, switching current	Max. 1 A
Type of fixing	Wall mounting with screws
Degree of protection	IP30
Dimensions (W x H x D)	93 x 128 x 30.8 mm
Communication	Bus: KNX (S-Mode und LTE-Mode mit Synco 700)

Stock No.	Product No.
S55770-T163	**RDG100KN**

Semi Flush-mount room thermostats with KNX communications, 2-/4-pipe fan coils or DX type equipment

RDF..KNX Semi Flush Mount

Semi Flush Mount room thermostat with LCD for fan coil units and compressors in DX-type equipment
- For heating and/or cooling applications
- KNX communications
- 2 or 3-position control outputs
- Output for 1-speed or 3-speed fan
- 2 multifunctional inputs for keycard contact, external room / return air temperature, heat / cool changeover, operation mode changeover, window contact on/off, dewpoint monitor, electrical heater enabled, fault contact
- Operating modes: Comfort, Economy and Protection
- Automatic or manual heating/cooling changeover
- Adjustable commissioning and control parameters
- Minimum and maximum setpoint limitation
- Backlit display
- Color of housing: signal white (RAL 9003)

Application selectable:
- 2-pipe system
- 2-pipe system with electrical heater
- 4-pipe system

Data sheet	N3171
Operating voltage	AC 230 V
Setpoint setting range	5...40 °C
Analog inputs, number	2
Relay outputs, number	5
Relay outputs	Fan: N.O. contacts, non-floating Valve: N.O. contacts, non-floating
Relay output, switching voltage	AC 230 V
Relay output, switching current	5 (2) A
Degree of protection	IP30
Communication	Bus: KNX (S-mode and LTE mode with Synco 700)

Range overview RDF..KNX Semi Flush Mount

Product Title	Type of fixing	Power consumption	Stock No.	Product No.
Semi Flush-mount room thermostat with KNX communications, 2-/4-pipe fan coils or DX type equipment	Recessed round conduit box diameter min. 60 mm	2	S55770-T293	RDF600KN
Semi Flush-mount room thermostat with KNX communications, 2-/4-pipe fan coils or DX type equipment	Recessed rectangular conduit box BS4662 with fixing centres of 60.3 mm	4	S55770-T104	**RDF301**
Semi Flush-mount room thermostat with KNX communications, 2-/4-pipe fan coils or DX type equipment, four buttons for switching lights and blinds	Recessed rectangular conduit box BS4662 with fixing centres of 60.3 mm	4	S55770-T105	**RDF301.50**

NEW PRODUCT

Communicative room thermostats
For VAV systems - Communicative KNX thermostat

RDG400KN

Room thermostat with KNX communications, AC 24 V, VAV heating and cooling systems

- Modulating PI control
- Control depending on the room or the return air temperature
- Output DC 0...10 V for VAV actuator and auxiliary output ON/OFF, PWM or 3-position or 3-position for VAV actuator and auxiliary output DC 0...10 V
- Automatic or manual heating / cooling changeover
- Operating modes: Comfort, Economy and Protection
- 2 multifunctional inputs for keycard contact, external room / return air temperature, heat / cool changeover, operation mode changeover, window contact on/off, dewpoint monitor, electrical heater enabled, fault contact
- 1 input DC 0...10 V for damper position feedback
- Adjustable commissioning and control parameters
- Minimum and maximum setpoint limitation
- Minimum and maximum limitation of air flow signal
- Output signal inversion (DC 0...10 V) as an option
- Backlit display

Application selectable:
- Single-duct system
- Single-duct system with electrical heater
- Single-duct system and radiator / floor heating
- Single-duct system with heating / cooling coil

Data sheet	N3192
Operating voltage	AC 24 V
Setpoint setting range	5...40 °C
Analog inputs, number	2
Analog input, signal	NTC 3k DC 0...10 V
Digital inputs, number	1
Analog outputs, number	1
Analog outputs	VAV actuator, electric heater
Analog output, signal	DC 0...10 V
Analog output, current	Max. ±1 mA
Triac outputs, number	1
Triac outputs	VAV actuator, valve, el. heater 2-position, PWM, 3-position
Triac output, switching voltage	AC 24 V
Triac output, switching current	Max. 1 A
Type of fixing	Wall mounting with screws
Degree of protection	IP30
Dimensions (W x H x D)	93 x 128 x 30.8 mm
Communication	Bus: KNX (S-mode and LTE mode with Synco 700)

Stock No.	Product No.
S55770-T165	**RDG400KN**

Semi Flush-mount room thermostat with KNX communications, for VAV application

RDU341

Semi Flush-mount room thermostat for VAV application
- Modulating PI control
- Control depending on the room or the return air temperature
- Output for a DC 0...10 V actuator and AC 230V electrical heater (ON-OFF)
- Automatic or manual heating/cooling changeover
- Operating modes: Comfort, Economy and Protection
- 2 multifunctional inputs for keycard contact, external room / return air temperature, heat / cool changeover, operation mode changeover, window contact on/off, dewpoint monitor, electrical heater enabled, fault contact
- Adjustable commissioning and control parameters
- Minimum and maximum setpoint limitation
- Adjustable minimum and maximum limitation for air flow signal DC 0...10V
- Output signal inversion as an option
- KNX communications

Application selectable:
- Single-duct system
- Single-duct system with electrical heater

Data sheet	N3172
Operating voltage	AC 24 V
Setpoint setting range	5...40 °C
Analog inputs, number	2
Analog outputs, number	1
Analog output, signal	DC 0...10 V
Analog output, current	Max. 1 mA
Relay outputs, number	1
Relay outputs	N.O. contact, potential-free
Relay output, switching voltage	AC 230 V
Relay output, switching current	Max. 5 (2) A
Type of fixing	Recessed rectangular conduit box BS4662 with fixing centres of 60.3 mm
Dimensions (W x H x D)	86 x 86 x 57 mm
Communication	Bus: KNX (S-mode and LTE mode with Synco 700)

Stock No.	Product No.
S55770-T106	**RDU341**

Communicative room thermostats
For fan coil units - Communicative Modbus thermostat

RDF302

Semi Flush-mount room thermostat with Modbus communications, 2-/4-pipe fan coils or DX type equipment

Semi Flush Mount room thermostat with LCD for fan coil units and compressors in DX-type equipment
- For heating and/or cooling applications
- Modbus communications
- 2 or 3-position control outputs
- Output for 1-speed or 3-speed fan
- 2 multifunctional inputs for keycard contact, external room / return air temperature, heat / cool changeover, operation mode changeover, window contact on/off, dewpoint monitor, electrical heater enabled, fault contact
- Operating modes: Comfort, Economy and Protection
- Automatic or manual heating/cooling changeover
- Adjustable commissioning and control parameters
- Minimum and maximum setpoint limitation
- Backlit display
- Color of housing: signal white (RAL 9003)

Application selectable:
- 2-pipe system
- 2-pipe system with electrical heater
- 4-pipe system

Data sheet	N3079
Operating voltage	AC 230 V
Setpoint setting range	5...40 °C
Analog inputs, number	2
Relay outputs, number	5
Relay outputs	Fan: N.O. contacts, non-floating Valve: N.O. contacts, non-floating
Relay output, switching voltage	AC 230 V
Relay output, switching current	5 (2) A
Type of fixing	Recessed rectangular conduit box BS4662 with fixing centres of 60.3 mm
Degree of protection	IP30
Dimensions (W x H x D)	86 x 86 x 57 mm
Communication	Bus: Modbus RTU (RS 485)

	Stock No.	Product No.
	S55770-T238	**RDF302**

Accessories for RDU.. / RDF302

Product Title	Data sheet	Stock No.	Product No.
Mounting plate 82 x 82 x 10 mm	N3009	BPZ:ARG70.3	**ARG70.3**
Conduit box	N3009	S55770-T137	**ARG71**

Temperature controller

RAK-TR.1..H

External scale, 1 changeover contact, immersion and strap-on thermostat in one.

Data sheet	N1205
Sensing element	Liquid expansion sensor
Digital outputs	1-pin Potential-free Changeover contact
Digital output, switching voltage	AC 24...250 V
Digital output, switching current	0.1...16 (2.5) A
Switching differential	6 K
Degree of protection	IP43
Dimensions (W x H x D)	55 x 156 x 72 mm

Range overview RAK-TR.1..H

Setpoint setting range [°C]	Protection pocket [LW7]	Capillary length [mm]	Stock No.	Product No.
15...95	PN 10, 100 mm, G ½"	700	S55700-P111	**RAK-TR.1000B-H**
15...95		700	S55700-P112	**RAK-TR.1000S-H**
15...82	PN 10, 100 mm, G ½"	700	S55700-P113	**RAK-TR.1210B-H**

Note to protection pocket: Brass, nickel-plated

Thermal reset limit thermostat

RAK-TW.1..H

Internal scale, 1 changeover contact, immersion and strap-on thermostat in one.

Data sheet	N1202
Sensing element	Liquid expansion sensor
Digital outputs	1-pin Potential-free Changeover contact
Digital output, switching voltage	AC 24...250 V
Digital output, switching current	Contact 1-2: 0.1...16 (2.5) A Contact 1-3: 0.1...6 (2.5) A
Switching differential	6 K
Degree of protection	IP43
Dimensions (W x H x D)	55 x 156 x 64 mm

Range overview RAK-TW.1..H

Setpoint setting range [°C]	Protection pocket [LW7]	Capillary length [mm]	Stock No.	Product No.
15...95	PN 10, 100 mm, G ½"	700	S55700-P114	**RAK-TW.1000B-H**
15...95		700	S55700-P116	**RAK-TW.1000S-H**
40...120	PN 10, 100 mm, G ½"	700	S55700-P117	**RAK-TW.1200B-H**
40...120		700	S55700-P119	**RAK-TW.1200S-H**

Note to protection pocket: Brass, nickel-plated

RAK-TW.1..H..

Thermal reset limit thermostat

Immersion, strap-on and remote thermostat in one

Data sheet	N1202
Sensing element	Liquid expansion sensor
Digital outputs	1-pole Potential-free Changeover contact
Digital output, switching voltage	AC 24...250 V
Digital output, switching current	Contact connection 1-2: 0.1...16 (2.5) A Contact connection 1-3: 0.1...6(2.5) A
Switching differential	6 K
Degree of protection	IP65
Dimensions (W x H x D)	55 x 156 x 64 mm

5

Range overview RAK-TW.1..H..

Setpoint setting range [°C]	Protection pocket [LW7]	Capillary length [mm]	Stock No.	Product No.
40...120	PN 10, 100 mm, G½"	700	S55700-P118	**RAK-TW.1200HP**
15...95	PN 10, 100 mm, G½"	700	S55700-P115	**RAK-TW.1000HB**

Note to protection pocket: Brass, nickel-plated

RAK-TB.1..M

Temperature limiter

Internal scale, 1 changeover contact, immersion and strap-on thermostat in one.

Data sheet	N1206
Sensing element	Liquid expansion sensor
Digital outputs	1-pin Potential-free Switchover contact
Digital output, switching voltage	AC 24...250 V
Digital output, switching current	Contact 11-12: 0.1...16 (2.5) A Contact 11-13: 2 (0.4) A
Reset temperature	Min. 15 K under the switch-off point
Degree of protection	IP43
Dimensions (W x H x D)	55 x 156 x 67 mm

Range overview RAK-TB.1..M

Switch-off point [°C]	Protection pocket [LW7]	Capillary length [mm]	Stock No.	Product No.
45...60		700	S55700-P108	**RAK-TB.1400S-M**
50...70	PN 10, 100 mm, G½"	700	S55700-P109	**RAK-TB.1410B-M**
65...80		700	S55700-P110	**RAK-TB.1420S-M**

Note to protection pocket: Brass, nickel-plated

Safety limit thermostat

RAK-ST..M

Internal scale, 1 changeover contact, failsafe capillary, immersion and strap-on thermostat in one, with ambient temperature compensation.

Data sheet	N1204
Sensing element	Liquid expansion sensor
Digital outputs	1-pin Potential-free Switchover contact
Digital output, switching voltage	AC 24...250 V
Digital output, switching current	Contact 11-12: 0.1...16 (2.5) A Contact 11-13: 2 (0.4) A
Reset temperature	Min. 15 K under the switch-off point
Degree of protection	IP43
Dimensions (W x H x D)	55 x 156 x 67 mm

Range overview RAK-ST..M

Switch-off point [°C]	Protection pocket [LW7]	Capillary length [mm]	Stock No.	Product No.
95	PN 10, 100 mm, G ½"	700	S55700-P100	**RAK-ST.010FP-M**
100	PN 10, 100 mm, G ½"	700	S55700-P101	**RAK-ST.020FP-M**
110	PN 10, 100 mm, G ½"	700	S55700-P102	**RAK-ST.030FP-M**
120...130	PN 10, 100 mm, G ½"	700	S55700-P103	**RAK-ST.1300P-M**
90...110	PN 10, 100 mm, G ½"	700	S55700-P104	**RAK-ST.1310P-M**
80...100		1600	S55700-P106	**RAK-ST.1430S-M**

Note to protection pocket: Brass, nickel-plated

Safety limit thermostat

RAK-ST.1..M..

Immersion, strap-on and remote thermostat in one

Data sheet	N1204
Sensing element	Liquid expansion sensor
Digital outputs	1-pole Potential-free Changeover contact
Digital output, switching voltage	AC 24...250 V
Digital output, switching current	Contact 11-12: 16 (2,5) A Contact 11-13: 2 (0,4) A
Reset temperature	7 K under the switch-off point
Degree of protection	IP65
Dimensions (W x H x D)	55 x 156 x 67 mm

Range overview RAK-ST.1..M..

Switch-off point [°C]	Protection pocket [LW7]	Capillary length [mm]	Stock No.	Product No.
Adjustable: 95...130	PN 10, 100 mm, G ½"	700	S55700-P107	**RAK-ST.1600MP**
Adjustable: 40...70		700	S55700-P105	**RAK-ST.1385M**

Note to protection pocket: Brass, nickel-plated

Protection pockets for RAK-T and RAK-S

Packaging unit	Protection pocket [LW7]	Material	PN class	Data sheet	Stock No.	Product No.
1 pc	100 mm, G½"	Brass, nickel-plated	PN 10	N1194	BPZ:ALT-SB100	**ALT-SB100**
1 pc	150 mm, G½"	Brass, nickel-plated	PN 10	N1194	BPZ:ALT-SB150	**ALT-SB150**
1 pc	200 mm, G½"	Brass, nickel-plated	PN 10	N1194	BPZ:ALT-SB200	**ALT-SB200**
1 pc	280 mm, G½"	Brass, nickel-plated	PN 10	N1194	BPZ:ALT-SB280	**ALT-SB280**
1 pc	450 mm, G½"	Brass, nickel-plated	PN 10	N1194	BPZ:ALT-SB450	**ALT-SB450**
1 pc	100 mm, G½"	Stainless steel V4A	PN 16	N1194	BPZ:ALT-SS100	**ALT-SS100**
1 pc	150 mm, G½"	Stainless steel V4A	PN 16	N1194	BPZ:ALT-SS150	**ALT-SS150**
1 pc	280 mm, G½"	Stainless steel V4A	PN 16	N1194	BPZ:ALT-SS280	**ALT-SS280**
1 pc	450 mm, G½"	Stainless steel V4A	PN 16	N1194	BPZ:ALT-SS450	**ALT-SS450**
1 pc	100 mm, G½" (with flange)	Stainless steel V4A	PN 40	N1194	BPZ:ALT-SSF100	**ALT-SSF100**
1 pc	150 mm, G½" (with flange)	Stainless steel V4A	PN 40	N1194	BPZ:ALT-SSF150	**ALT-SSF150**
1 pc	200 mm, G½" (with flange)	Stainless steel V4A	PN 40	N1194	BPZ:ALT-SSF200	**ALT-SSF200**
1 pc	280 mm, G½" (with flange)	Stainless steel V4A	PN 40	N1194	BPZ:ALT-SSF280	**ALT-SSF280**
1 pc	450 mm, G½" (with flange)	Stainless steel V4A	PN 40	N1194	BPZ:ALT-SSF450	**ALT-SSF450**
1 pc	600 mm, G½" (with flange)	Stainless steel V4A	PN 40	N1194	BPZ:ALT-SSF600	**ALT-SSF600**

Accessories for RAK-T and RAK-S

Packaging unit	Product Title	Material	Data sheet	Stock No.	Product No.
1 pc	Protection pocket, perforated, 200 mm	Steel, galvanized	N1193	BPZ:ALT-AB200	**ALT-AB200**
1 bag	Mounting kit for RAK../RAZ..		N1193	BPZ:ALT-C001	**ALT-C001**
1 pcs.	Mounting flange, adjustable depth	PA66GF35	N1193	BPZ:AQM63.0	**AQM63.0**
1 box	Terminal housing		N1207	S55700-P131	**RAK-H-M**

Temperature controller/ thermal reset limit thermostat

RAZ-TW.1..J

Combination of control thermostat (TR) and thermal reset limit thermostat (TW). Inernal scale (TR), internal scale (TW), 2 changeover contacts. Immersion thermostat and wall mounting.

Data sheet	N1212
Sensing element	Liquid expansion sensor
Reset temperature	Min. 15 Kelvin under the switch-off point
Switching differential	6 K
Digital outputs	1-pin Potential-free Changeover contact
Digital output, switching voltage	AC 24...250 V
Digital output, switching current	0.1...16 (4) A
Degree of protection	IP40
Dimensions (W x H x D)	120 x 106 x 70 mm

Range overview RAZ-TW.1..J

Setpoint setting range [°C]	Protection pocket [LW7]	Capillary length [mm]	Stock No.	Product No.
TR: 15...95 TW: 15...95	PN 10, 100 mm, G ½" 2x	700	S55700-P140	**RAZ-TW.1000P-J**
TR: 40...120 TW: 40...120	PN 10, 100 mm, G ½" 2x	700	S55700-P141	**RAZ-TW.1200P-J**

Double protection pocket 2x inner dia.7mm, brass nickel plated

Temperature controller/ safety limit thermostat

RAZ-ST..J

Combination of control thermostat (TR) and safety limit thermostat (STB). Internal scale (TR), internal scale (STB), 2 changeover contacts, failsafe capillary, STB with ambient temperature compensation. Immersion thermostat and wall mounting.

Data sheet	N1214
Sensing element	Liquid expansion sensor
Capillary length	700 mm
Reset temperature	Min. 20 Kelvin under the switch-off point
Switching differential	TR: 6 K STB: ±5 K
Digital outputs	1-pin Potential-free Changeover contact
Digital output, switching voltage	AC 24...250 V
Digital output, switching current	TR: 0.1...16 (4) A STB: Contact 1-2 0.1...16 (1) A Contact 1-4 max. 0.5 A (alarm contact)
Degree of protection	IP40
Dimensions (W x H x D)	120 x 106 x 70 mm

Range overview RAZ-ST..J

Setpoint setting range [°C]	Switch-off point [°C]	Protection pocket [LW7]	Stock No.	Product No.
TR: 15...95 STB: 100	100	PN 10, 100 mm, G ½"	S55700-P136	**RAZ-ST.011FP-J**
TR: 15...95 STB: 110	110	PN 10, 100 mm, G ½"	S55700-P137	**RAZ-ST.030FP-J**
TR: 15...95 STB: 110...130	110...130	PN 10, 100 mm, G ½"	S55700-P138	**RAZ-ST.1500P-J**
TR: 15...95 STB: 90...110	90...110	PN 10, 100 mm, G ½"	S55700-P139	**RAZ-ST.1510P-J**

Double protection pocket 2x inner dia.7mm, brass nickel plated

5

Accessories for RAZ-..

Product Title	Material	PN class	Data sheet	Stock No.	Product No.
Protection pocket 100 mm, MS63 nickel-plated, G½", PN10, 2xLW7	Brass, nickel-plated	PN 10	N1194	S55700-P142	**ALT-DB100J**
Protection pocket 150 mm, MS63 nickel-plated, G½", PN10, 2xLW7	Brass, nickel-plated	PN 10	N1194	S55700-P143	**ALT-DB150J**
Protection pocket 280 mm, MS63 nickel-plated, G½", PN10, 2xLW7	Brass, nickel-plated	PN 10	N1194	S55700-P144	**ALT-DB280J**
Protection pocket 450 mm, MS63 nickel-plated, G½", PN10, 2xLW7	Brass, nickel-plated	PN 10	N1194	S55700-P145	**ALT-DB450J**
Protection pocket, 100 mm, G½" LW15, stainless steel V4A	Stainless steel V4A	PN 16	N1194	S55700-P146	**ALT-DS100J**
Protection pocket, 150 mm, G½" LW15, stainless steel V4A	Stainless steel V4A	PN 16	N1194	S55700-P147	**ALT-DS150J**
Protection pocket, 280 mm, G½" LW15, stainless steel V4A	Stainless steel V4A	PN 16	N1194	S55700-P148	**ALT-DS280J**
Protection pocket, 450 mm, G½" LW15, stainless steel V4A	Stainless steel V4A	PN 16	N1194	S55700-P149	**ALT-DS450J**
Mounting kit for RAK../RAZ..			N1193	BPZ:ALT-C001	**ALT-C001**

Strap-on temperature controller, 20...90 °C, fixing spring, setpoint adjuster externally

RAM-TR.2000M

Electromechanical temperature control (TR) with single-pole changeover microswitch:
- Set point externally adjustable
- Controlled medium: water, oil

Data sheet	N1198
Sensing element	Bimetall
Digital outputs	1-pin Potential-free Changeover contact
Digital output, switching voltage	AC 24...250 V
Digital output, switching current	0.2...16 A
Setpoint setting range	20...90 °C
Mounting location	Surface-mounted on pipes or storage tanks
Degree of protection	IP20
Dimensions (W x H x D)	38 x 105 x 42 mm

Stock No.	Product No.
BPZ:RAM-TR.2000M	**RAM-TR.2000M**

Strap-on temperature limitation, 20...90 °C, fixing spring, setpoint adjuster internally

RAM-TW.2000M

Electromechanical temperature limitation (TW) with single-pole changeover microswitch:
- Set point internally adjustable
- Controlled medium: water, oil

Data sheet	N1198
Sensing element	Bimetal
Digital outputs	1-pin Potential-free Changeover contact
Digital output, switching voltage	AC 24...250 V
Digital output, switching current	0.2...16 A
Setpoint setting range	20...90 °C
Mounting location	Surface-mounted on pipes or storage tanks
Degree of protection	IP20
Dimensions (W x H x D)	38 x 105 x 42 mm

Stock No.	Product No.
BPZ:RAM-TW.2000M	**RAM-TW.2000M**

RYT182

Changeover thermostat, changeover, 30 °C / 19 °C, IP54

For changeover of controller's operating action (heating / cooling) depending on the flow temperature.

Data sheet	N1295
Cooling mode *1)	t_{VI} < 19 °C
Heating mode *2)	t_{VI} > 30 °C
Digital outputs	1-pin Potential-free Changeover contact
Digital output, switching voltage	AC 230 V
Digital output, switching current	0.1...3 A
Degree of protection	IP54

Stock No.	Product No.
BPZ:RYT182	**RYT182**

Cooling mode: closed contact between white-blue
Heating mode: closed contact between white-black

5

TKM2

Thermal reset limit thermostat for air ducts, 20...110 °C; perforated protection pocket 200mm

Data sheet	N1291
Setpoint setting range	20...110 °C
Switching differential	2 K
Digital outputs	1-pin Potential-free Changover contact
Digital output, switching voltage	AC 250 V
Digital output, switching current	0.2...10 (2) A
Mounting position	Any
Ambient temperature head	Max. 100 °C
Ambient temperature, operation	120 °C
Ambient temperature sensor	Max. 10 % above setpoint setting range
Degree of protection	IP54
Dimensions (W x H x D)	60 x 120 x 55 mm

Stock No.	Product No.
BPZ:TKM2	**TKM2**

Accessory for TKM2

Product Title	Material	Packaging unit	Data sheet	Stock No.	Product No.
Protection pocket, perforated, 200 mm	Steel, galvanized	1 pc	N1193	BPZ:ALT-AB200	**ALT-AB200**

Safety limit thermostats and thermal reset limit thermostats, capillary 150 mm

RAG-..

Internal scale, 1 changeover contact, failsafe capillary, immersion thermostat, with ambient temperature compensation.

Data sheet	N1211
Setpoint setting range	40...230 °C
Sensing element	Liquid expansion sensor
Digital outputs	1-pin Potential-free Switchover contact
Digital output, switching voltage	AC 230 V
Digital output, switching current	16 (2.5) A
Switching differential	1.5 K
Capillary length	150 mm
Protection pocket	Protection pocket with mounting flange, 150 mm, 4.8 mm dia
Degree of protection	IP43
Dimensions (W x H x D)	55 x 156 x 67 mm

Range overview RAG-..

Product Title	Stock No.	Product No.
Safety temperature limiter fixed 40...230 °C, pocket 150 mm, capillary 150 mm	S55700-P135	**RAG-ST.1**
Thermal reset limit thermostat, 40...230 °C, capillary tube 150 mm	S55700-P134	**RAG-TW.1**

QAF63..

Frost sensor, modulating

- For fitting to the air duct
- Fully active capillary tube sensor
- With capillary tube entry

Data sheet	N1821
Operating voltage	AC 24 V
Power consumption	5 VA
Analog output, signal	DC 0...10 V
Measuring range, temperature	0...15 °C
Min. active length	250 mm
Ambient temperature, operation	-15...60 °C
Connection cable	3-wire
Degree of protection	IP42
Dimensions (W x H x D)	96 x 136 x 67 mm

In addition to direct mounting, the frost sensor can be fitted to the air duct using the AQM63.0 snap-on mounting flange (accessory).

5

Range overview QAF63..

Capillary length [mm]	Data sheet	Stock No.	Product No.
2000	N1821	BPZ:QAF63.2	**QAF63.2**
6000	N1821	BPZ:QAF63.6	**QAF63.6**

Frost monitor, air side, 2-point

QAF64..

- Modulating and 2-position
- Fully active capillary type sensing element
- Indication of frost with red LED
- Test switch for simulation of frost
- Selector for automatic or manual reset function
- Modulating P-controller for startup
- Limit value contact for plant control

Data sheet	N1283
Operating voltage	AC 24 V
Power consumption	6 VA
Analog inputs	Control input
Analog output, signal	DC 0...10 V
Analog input, signal	0.1 mA DC 0...10 V
Setpoint setting range	1...10 °C
Measuring range, temperature	0...15 °C
Min. active length	250 mm
Digital outputs	Potential-free Switchover contact
Digital output, switching voltage	DC 5 V / AC 5...250 V
Digital output, switching current	6 (4) A
Ambient temperature, operation	-15...60 °C
Connection cable	6 (8)-wire
Degree of protection	IP42
Dimensions (W x H x D)	96 x 136 x 67 mm

In addition to direct mounting, the frost monitor can be fitted to the air duct using the AQM63.0 snap-on mounting flange (accessory).

Range overview QAF64..

Capillary length [mm]	Data sheet	Stock No.	Product No.
2000	N1283	BPZ:QAF64.2	**QAF64.2**
6000	N1283	BPZ:QAF64.6	**QAF64.6**

Accessories for QAF63.. and QAF64..

Mounting flange, adjustable depth

AQM63.0

Data sheet	N1193
Packaging unit	1 pcs.

Accessories for QAM21.., QAF63.. and QAF64..

Stock No.	Product No.
BPZ:AQM63.0	**AQM63.0**

AQM63.2

3 capillary supports and 3 spacers for QAF.. Mounting

3 capillary tube clamps and 3 spacers
With 2 m capillary tube: Use 1 AQM63.2
With 6 m capillary tube: Use 2 AQM63.2

Data sheet N1821

Stock No.	Product No.
BPZ:AQM63.2	**AQM63.2**

QAF65.3-J

Frost monitor, 2-point, capillary tube 3000 mm, -10...15 °C

Internal scale, 1 changeover contact, capillary tube for fitting on air heating coils

Data sheet	N1286
Setpoint setting range	-10...15 °C
Switching differential	2 K
Digital output, switching voltage	AC 24...250 V
Digital outputs	Switchover contact Potential-free
Digital output, switching current	Contact 1-2: 0.1...16 (2.5) A Contact 1-3: 0.1...16 (2.5) A
Degree of protection	IP43
Dimensions (W x H x D)	56 x 156 x 64 mm

For fixing the capillary, accessory AQM63.2 (2 x 3 capillary tube clamps and 2 x 3 spacers) or capillary clamps type FK-TZ1 is required.

Stock No.	Product No.
S55700-P150	**QAF65.3-J**

Accessories for QFA65.3-J

Product Title	Data sheet	Stock No.	Product No.
Mounting flange, adjustable depth	N1193	BPZ:AQM63.0	**AQM63.0**
3 capillary supports and 3 spacers for QAF.. Mounting	N1821	BPZ:AQM63.2	**AQM63.2**
6 Capillary tube clamps for QAF../QAM.. mounting	N1284	BPZ:AQM63.3	**AQM63.3**

QAF81..

Frost monitor, 2-point

For temperature supervision on the air side of air heating coils in ventilation and air conditioning plants to provide protection against frost.

Data sheet	N1284
Setpoint setting range	-5...+15 °C
Switching differential	2 K
Digital outputs	1-pin Potential-free Switchover contact
Digital output, switching voltage	AC 250 V
Digital output, switching current	10 (2) A
Mounting position	Any
Min. active length	300 mm
Degree of protection	IP54
Dimensions (W x H x D)	106 x 113 x 37 mm

Range overview QAF81..

Capillary length [mm]	Data sheet	Stock No.	Product No.
3000	N1284	BPZ:QAF81.3	**QAF81.3**
6000	N1284	BPZ:QAF81.6	**QAF81.6**
6000	N1284	BPZ:QAF81.6M	**QAF81.6M**

QAF81.6M, with lock-out and manual reset

Accessories for QAF81..

Product Title	Data sheet	Stock No.	Product No.
6 Capillary tube clamps for QAF../QAM.. mounting	N1284	BPZ:AQM63.3	**AQM63.3**

Frost protection monitor

RAK-TW.5..H

Internal scale, 1 changeover contact, immersion and strap-on thermostat in one.

Data sheet	N1203
Sensing element	Liquid expansion sensor
Digital outputs	1-pin Potential-free Switching contact
Digital output, switching voltage	AC 24...250 V
Digital output, switching current	Contact 1-2: 0.1...16 (2.5) A Contact 1-3: 0.1...6 (2.5) A
Switching differential	5 K
Degree of protection	IP43
Dimensions (W x H x D)	55 x 156 x 64 mm

Perforated protection pocket must be ordered as a separate item: ALT-AB200

Range overview RAK-TW.5..H

Setpoint setting range [°C]	Capillary length [mm]	Stock No.	Product No.
5...65	1600	S55700-P121	**RAK-TW.5000S-H**
-10...50	1600	S55700-P122	**RAK-TW.5010S-H**

Frost protection monitor

RAK-TW.5..H..

Immersion, strap-on and remote thermostat in one

Data sheet	N1203
Sensing element	Liquid expansion sensor
Digital outputs	1-pole Potential-free Changeover contact
Digital output, switching voltage	AC 24...250 V
Digital output, switching current	Contact connection 1-2: 0.1...16 (2.5) A Contact connection 1-3: 0.1...6 (2.5) A
Switching differential	5 K
Degree of protection	IP65
Dimensions (W x H x D)	55 x 156 x 64 mm

Perforated protection pocket must be ordered as a separate item: ALT-AB200

Range overview RAK-TW.5..H..

Setpoint setting range [°C]	Capillary length [mm]	Stock No.	Product No.
5...65	1600	S55700-P120	**RAK-TW.5000HS**

Accessories for RAK-TW.5.. and RAK-TW.5..H..

Product Title	Material	Packaging unit	Data sheet	Stock No.	Product No.
Protection pocket, perforated, 200 mm	Steel, galvanized	1 pc	N1193	BPZ:ALT-AB200	**ALT-AB200**

Room thermostat with helix sensor, TR -5..50 °C — TRG2

For commercial and industrial applications.

Data sheet	N1329
Setpoint setting range	-5...50 °C
Switching differential	Adjustable: 0.7...6 K
Digital outputs	1-pin Potential-free Changeover contact
Digital output, switching voltage	AC 250 V
Digital output, switching current	0.2...10 (2) A
Mounting position	Horizontal
Degree of protection	IP54
Dimensions (W x H x D)	98 x 95 x 63 mm

Stock No.	Product No.
BPZ:TRG2	**TRG2**

5

Room thermostat with helix sensor, TR -5..50 °C, 2 switches on 2 steps 2..12 K difference — TRG22

For commercial and industrial applications.

Data sheet	N1329
Setpoint setting range	-5...50 °C
Switching differential	2 K
Switching interval	2...12 K
Digital outputs	2 Changeover contacts, 1-pole Potential-free
Digital output, switching voltage	AC 250 V
Digital output, switching current	0.2...10 (2) A
Mounting position	horizontal
Degree of protection	IP54
Dimensions (W x H x D)	98 x 135 x 67 mm

Note on switching interval:
Adjustable temperature difference between step 1 and step 2.

Stock No.	Product No.
BPZ:TRG22	**TRG22**

Sensors

6

Overview and selection tools	Overview of product details	6-2
Temperature sensors	Room sensors - wall mounting QAA..	6-5
	Room sensors - flush mounting AQR..	6-8
	Duct sensors: QAM.. / FK-TP..	6-9
	Immersion sensors: QAE.. / FT-TP..	6-11
	Strap-on sensors QAD..	6-16
	Outside sensors QAC..	6-17
	Window pan / flue gas: QAT.. / FGT..	6-18
	Cable sensors: QAP.. / QAZ.. / QAH..	6-19
Humidity sensors	Room sensors - wall mounting QFA..	6-21
	Accessories for room sensors - wall mounting	6-23
	Room sensors - flush mounting AQR25..	6-24
	Room hygrostats	6-26
	Duct sensors QFM	6-27
	Accessories for duct sensors	6-30
	Duct hygrostats	6-31
	Condensation monitor QXA..	6-32
Air quality sensors	Room sensors - wall mounting QPA..	6-34
	Room sensors - flush mounting AQR25..	6-36
	Duct sensors QPM..	6-40
Pressure sensors	Differential pressure sensor air and non-aggressive gas QBM..	6-41
	Differential pressure switches QBM81	6-45
	Pressure sensors for liquids and gases QBE..	6-46
	Pressure sensors refrigerant QBE..	6-51
Flow sensors	Flow sensors QVE..	6-53
	Flow switches QVE1..	6-55
	Velocity sensors QVM..	6-57
Solar sensors..	Solar sensors QLS..	6-58

Overview sensors

Temperature

Model		Room sensors	Duct sensors	Immersion sensors	Outside sensors		Strap-on sensors	Cable sensors
Type reference		QAA	QAM	QAE	QAC	QAC	QAD	QAP
Category:	Standard	■	■	■		■	■	■
	High Quality				■			

Humidity

Model		Room sensors				Duct sensors			Outside sensors
Type reference		QFA	QFA..D	QFA	QFA..D	QFM	QFM	QFM..D	QFA
Category	Standard	■	■			■			
	High Quality			■	■		■	■	■
	Certified			■	■		■		

Air quality

Model		Room sensors			Air duct sensors		
Type reference		QPA		QPA..D	QPM		QPM..D
Measured value	VOC	■			■		
	CO_2		■			■	
	CO_2 / VOC		■	■		■	■
	CO_2 / T		■	■		■	■
	CO_2 / H / T		■	■		■	■
Display				■			■
Category	Basic	■			■		
	Standard		■	■		■	■

Pressure

Model		Differential pressure sensors				Absolute pressure sensors	
Medium		Air	Air	Liquids / gases	Liquids / gases	Liquids / gases	Refrigeration
Type reference		QBM65/75	QBM66	QBE63	QBE3x00-D	QBE2x02-P	QBE2x01-P
Category	Standard		■	■		■	■
	High Quality	■			■		
	Certified	■					

Flow

Model		Flow switch			Flow sensor		Air velocity sensor
Medium		Liquids	Liquids	Liquids	Liquids	Liquids	Air
Type reference		QVE1900	QVE1901	QVE1902	QVE2x00	QVE3x00	QVM62.1
Category	Basic	■	■	■			
	Standard				■		■
	High Quality					■	

Xtra			
Model		Solar sensors	Flue gas temperature sensors
Type reference		QLS60	FGT-PT1000
Medium			Air
Measured value		Intensity of radiation	Flue gas temperature
Category	Standard	■	
	High Quality		■

Overview module combinations - room sensors for flush mounting

Active sensors			Measuring variables					Selection tool controller range						
Basic module	+	Front module	CO_2	VOC	Relative humidity	Active temp.	Passive temp.	Desigo PX	RXL	RXB	RXC	RVL4, RVP3	Synco 200	Synco 700
AQR2540Nx	+	AQR2532NNW				■		■					■	■
AQR2540Nx	+	AQR2533NNW			■			■					■	■
AQR2540Nx	+	AQR2535NNW			■	■		■					■	■
AQR2540Nx	+	AQR2534ANW			■	■	LG-Ni1000	■	■	■	■	■	■	■
AQR2540Nx	+	AQR2534FNW			■	■	NTC 10k [3]	■						
AQR2546Nx	+	AQR2530NNW	■					■					■	■
AQR2546Nx	+	AQR2532NNW	■			■		■					■	■
AQR2546Nx	+	AQR2533NNW	■		■			■					■	■
AQR2546Nx	+	AQR2535NNW	■		■	■ [2]		■					■	■
AQR2546Nx	+	AQR2534ANW	■		■	■ [2]	LG-Ni1000	■	■	■	■	■	■	■
AQR2546Nx	+	AQR2534FNW	■		■	■ [2]	NTC 10k [3]	■						
AQR2547Nx	+	AQR2530NNW		■				■					■	■
AQR2547Nx	+	AQR2532NNW		■		■		■					■	■
AQR2547Nx	+	AQR2533NNW		■	■			■					■	■
AQR2547Nx	+	AQR2535NNW		■	■	■ [2]		■					■	■
AQR2547Nx	+	AQR2534ANW		■	■	■ [2]	LG-Ni1000	■	■	■	■	■	■	■
AQR2547Nx	+	AQR2534FNW		■	■	■ [2]	NTC 10k [3]	■						
AQR2548Nx	+	AQR2530NNW	■	■ [1]				■					■	■
AQR2548Nx	+	AQR2532NNW	■	■ [1]		■		■					■	■
AQR2548Nx	+	AQR2533NNW	■	■ [1]	■			■					■	■
AQR2548Nx	+	AQR2535NNW	■	■ [1]	■	■ [2]		■					■	■
AQR2548Nx	+	AQR2534ANW	■	■ [1]	■	■ [2]	LG-Ni1000	■	■	■	■	■	■	■
AQR2548Nx	+	AQR2534FNW	■	■ [1]	■	■ [2]	NTC 10k [3]	■						

For passive sensors see page **6-4**

[1] Here, the in-door air quality is calculated from the CO_2 and VOC measuring variables. VOC is not available as direct measuring variable.
[2] The measuring variable is solely available as switch output.
[3] The Desigo PX does not accept NTC 10k signal. The Desigo TX module need to be used for the NTC 10k signal.

Overview and selection tools
Overview of product details

Passive sensors			Measuring variables					Selection tool controller range						
Mounting plate	+	Front module	CO_2	VOC	Relative humidity	Active temp.	Passive temp.	Desigo PX	RXL	RXB	RXC	RVL4, RVP3	Synco 200	Synco 700
AQR2500Nx	+	AQR2531ANW					LG-Ni1000	■	■	■	■	■	■	■
AQR2500Nx	+	AQR2531BNW					PT1000	■					■	■
AQR2500Nx	+	AQR2531FNW					NTC 10k [3]	■						

[1] Here, the in-door air quality is calculated from the CO_2 and VOC measuring variables. VOC is not available as direct measuring variable.
[2] The measuring variable is solely available as switch output.
[3] The Desigo PX does not accept NTC 10k signal. The Desigo TX module need to be used for the NTC 10k signal.

Replace x with:
– **F** for VDI (70x70 mm)
– **H** for British Standard (83x83 mm)
– **G** for Italian Standard 3 modular (110x64 mm)
– **J** for UL Standard 2" x 4" (64x110 mm)

Power supply: AC 24 V, DC 15...36 V
Signal range active sensor: DC 0...5 V, DC 2...10 V, DC 0...10 V, DC 0...20 mA, DC 4...20 mA, and DC 0...10 mA
A freely selectable switching contact is available for every measuring variable.

6

Communicative sensors			Measuring variables				Inputs	
Base modul	+	Front module	CO_2	Relative humidity	Temperature	Air quality indicator	Passive temperature NTC 10k	Two potential-free contacts
AQR2570Nx	+	AQR2532NNW			■		■	■
AQR2570Nx	+	AQR2533NNW		■			■	■
AQR2570Nx	+	AQR2535NNW		■	■		■	■
AQR2576Nx	+	AQR2530NNW	■				■	■
AQR2576Nx	+	AQR2532NNW	■		■		■	■
AQR2576Nx	+	AQR2533NNW	■	■			■	■
AQR2576Nx	+	AQR2535NNW	■	■	■		■	■
AQR2576Nx	+	AQR2535NNWQ	■	■	■	■	■	■

Replace x with:
– F for VDI (70x70 mm)
– **H** for British Standard (83x83 mm)
– **G** for Italian Standard 3 modular (110x64 mm)
– **J** for UL Standard 2" x 4" (64x110 mm)

The room sensors are KNX certified and can be used in conjunction with all devices capable of communicating over KNX.

Furthermore the sensors can be used with the following Siemens building automation systems:
– Desigo TRA (PL-Link)
– Synco 700 (KNX LTE-Mode)
– GAMMA (KNX S-Mode)

Room temperature sensor, passive

QAA2..

Measuring range, temperature	0...50 °C
Connection, electrical	Screw terminals
Degree of protection	IP30
Dimensions (W x H x D)	90 x 100 x 32 mm

Range overview QAA2..

Sensing element, temperature	Time constant [min]	Measurement accuracy [°C]	Data sheet	Stock No.	Product No.
LG-Ni1000	7	At 0...50 °C: ±0.8	N1721	BPZ:QAA24	**QAA24**
Pt100	7	At 0...50 °C: ±0.6	N1745	BPZ:QAA2010	**QAA2010**
Pt1000	7	At 0...50 °C: ±0.6	N1745	BPZ:QAA2012	**QAA2012**
Pt1000	7	At 0...50 °C: ±0.6	N1745	S55720-S108	**QAA2012N**
LG-Ni1000	7	At 0...50 °C: ±0.8	N1721	S55720-S107	**QAA2020N**
NTC 10k	7	At 0...50 °C: ±0.8	N1745	BPZ:QAA2030	**QAA2030**

Variants QAA..N = no logo

6

Room temperature sensor

QAA24/AP

For wall mounting

Data sheet	N1748
Measuring range, temperature	0...50 °C
Sensing element, temperature	LG-Ni1000
Time constant	2 min with air movement
Connection, electrical	Screw terminals
Degree of protection	IP30

Stock No.	Product No.
BPZ:QAA24/AP	**QAA24/AP**

Room unit with temperature sensor and setpoint adjuster

QAA25/AP

With setpoint adjuster, housing for wall mounting

Data sheet	N1748
Measuring range, temperature	0...50 °C
Setpoint setting range	5...35 °C
Sensing element, temperature	LG-Ni1000
Time constant	4 min with air movement
Connection, electrical	Screw terminals
Degree of protection	IP30

Stock No.	Product No.
BPZ:QAA25/AP	**QAA25/AP**

QAA25

Room unit with room temperature sensor and setpoint adjuster

Data sheet	N1721
Setpoint setting range	5...35 °C
Measuring range, temperature	0...50 °C
Degree of protection	IP30
Sensing element, temperature	LG-Ni1000
Time constant	7 min
Connection, electrical	Screw terminals

For Synco™ and Desigo™ PX applications

Stock No.	Product No.
BPZ:QAA25	**QAA25**

QAA26

Room unit with room temperature sensor and setpoint adjuster 5..30 °C

Data sheet	N1721
Setpoint setting range	5...30 °C
Measuring range, temperature	0...50 °C
Degree of protection	IP30
Sensing element, temperature	LG-Ni1000
Time constant	7 min
Connection, electrical	Screw terminals

For Desigo™ PX applications

Stock No.	Product No.
BPZ:QAA26	**QAA26**

QAA27

Room unit with room temperature sensor and setpoint readjuster -3...3 K

Data sheet	N1721
Setpoint readjustment range	-3...3 K
Measuring range, temperature	0...50 °C
Degree of protection	IP30
Sensing element, temperature	LG-Ni1000
Time constant	7 min
Connection, electrical	Screw terminals

For Synco™, Desigo™ PX and Desigo™ RXA applications

Stock No.	Product No.
BPZ:QAA27	**QAA27**

QAA20..1

Room temperature sensor, active

Data sheet	N1749
Measuring range	0...50 °C
Measurement accuracy	at AC 24 V in the range of -25 °C...+25 °C ± 0.75 K -50 °C...+50 °C ±0.9 K
Time constant	7 min
Connection, electrical	Screw terminals
Degree of protection	IP30
Dimensions (W x H x D)	90 x 100 x 36 mm

Range overview QAA20..1

Analog output, signal	Operating voltage	Display	Stock No.	Product No.
DC 0...10 V	AC 24 V DC 13.5...35 V		BPZ:QAA2061	**QAA2061**
DC 4...20 mA	DC 13.5...35 V		BPZ:QAA2071	**QAA2071**
DC 0...10 V	AC 24 V DC 13.5...35 V	LCD	BPZ:QAA2061D	**QAA2061D**

Room temperature sensor LG-Ni1000 for mounting on recessed conduit boxes QAA64

For mounting on recessed conduit boxes.
Not suited for cooling in VAV installations.

Data sheet	N1722
Measuring range, temperature	0...50 °C
Sensing element, temperature	LG-Ni1000
Measurement accuracy	At 0...50 °C: ±0.8 K
Time constant	6.5 min
Connection, electrical	Screw terminals
Degree of protection	IP40
Dimensions (W x H x D)	84 x 84 x 25 mm

Stock No.	Product No.
BPZ:QAA64	**QAA64**

Room temperature sensor NTC 3 kOhm QAA32

Data sheet	N1747
Measuring range, temperature	0...40 °C
Sensing element, temperature	NTC 3k
Measurement accuracy	At 25 °C: ±0.3 K
Time constant	6 min
Connection, electrical	Screw terminals
Degree of protection	IP30
Dimensions (W x H x D)	97 × 100 × 36 mm

Stock No.	Product No.
BPZ:QAA32	**QAA32**

Accessories for QAA32

Product Title	Stock No.	Product No.
Mounting plate 96 x 120 mm for 2 x 4" housing	BPZ:ARG70.1	**ARG70.1**
Mounting plate 120 x 120 mm for 4 x 4" housing	BPZ:ARG70	**ARG70**

AQR2531..

Front modules with passiv temperature measurement

Data sheet	N1408
Measuring range, temperature	0...50 °C
Connection, electrical	Screw terminals
Degree of protection	IP30
Color	Titanium white
Dimensions (W x H)	55 x 55 mm

Range overview AQR2531..

Sensing element, temperature	Stock No.	Product No.
LG-Ni1000	S55720-S133	AQR2531ANW
Pt1000	S55720-S134	**AQR2531BNW**
NTC 10k	S55720-S135	**AQR2531FNW**

Mounting plates for front modules AQR2531..

Mechanical design	Dimensions (W x H)	Stock No.	Product No.
EU (CEE/VDE)	70.8 x 70.8 mm	S55720-S161	**AQR2500NF**
UK (British Standard)	83 x 83 mm	S55720-S162	**AQR2500NH**
IT (3 modular)	110 x 64 mm	S55720-S163	**AQR2500NG**
US (UL)	64 x 110 mm	S55720-S164	**AQR2500NJ**

Frames for front modules AQR253..

Mechanical design	Color	Dimensions (W x H)	Stock No.	Product No.
DELTA line (CEE/VDE)	Titanium white	80.2 x 80.2 mm	S55720-S158	**AQR2510NFW**
DELTA miro (British Standard)	Titanium white	90 x 90 mm	S55720-S159	**AQR2510NHW**
DELTA azio (UL / 3 Modular)	Titanium white	80 x 120 mm / 120 x 80 mm	S55720-S160	**AQR2510NGW**

Duct temperature sensor, passive

QAM21..

Fully active, flexible probe for averaging.

Data sheet	N1761
Time constant	At v = 2 m/s: 30 s
Connection, electrical	Screw terminals
Type of fixing	Flange
Degree of protection	IP42

Note on fixing:
Supplied complete with mounting flange.

Range overview QAM21..

Probe length [mm]	Sensing element, temperature	Measuring range, temperature [°C]	Measurement accuracy [K]	Stock No.	Product No.
400	LG-Ni1000	-50...80	At -50...80 °C: ±1.8	BPZ:QAM2120.040	**QAM2120.040**
2000	LG-Ni1000	-50...80	At -50...80 °C: ±1.8	BPZ:QAM2120.200	**QAM2120.200**
6000	LG-Ni1000	-50...80	At -50...80 °C: ±1.8	BPZ:QAM2120.600	**QAM2120.600**
400	Pt100	-50...80	At -50...80 °C: ±0.7	BPZ:QAM2110.040	**QAM2110.040**
400	Pt1000	-50...80	At -50...80 °C: ±0.7	BPZ:QAM2112.040	**QAM2112.040**
2000	Pt1000	-50...80	At -50...80 °C: ±0.7	BPZ:QAM2112.200	**QAM2112.200**
400	NTC 10k	-40...80	At -40...80 °C: ±1.2	BPZ:QAM2130.040	**QAM2130.040**

6

Duct temperature sensor active

QAM21..1..

Fully active, flexible probe for averaging.

Data sheet	N1762
Measuring range, temperature	-50...50 °C
Measurement accuracy	At -50...50 °C: ±0.9 K
Time constant	30 s at v = 2 m/s
Connection, electrical	Screw terminals
Type of fixing	Flange
Degree of protection	IP54
Power consumption	≤ 1 VA

Note on fixing:
Supplied complete with mounting flange.

Range overview QAM21..1..

Analog output, signal	Operating voltage	Probe length [mm]	Stock No.	Product No.
DC 0...10 V	AC 24 V DC 13.5...35 V	400	BPZ:QAM2161.040	**QAM2161.040**
DC 4...20 mA	DC 13.5...35 V	400	BPZ:QAM2171.040	**QAM2171.040**

Accessories for QAM21.. and QAM21..1..

Product Title	Data sheet	Stock No.	Product No.
Mounting flange, adjustable depth	N1193	BPZ:AQM63.0	**AQM63.0**
3 capillary supports and 3 spacers for QAF.. Mounting	N1821	BPZ:AQM63.2	**AQM63.2**
6 Capillary tube clamps for QAF../QAM.. mounting	N1284	BPZ:AQM63.3	**AQM63.3**

FK-TP/200

Duct temperature sensor Pt100, for high temperature

With connecting head to DIN.
No protection pocket required.

Data sheet	N1778
Measuring range, temperature	-60...300 °C
Sensing element, temperature	Pt100
Time constant	<100 s at v = 1 m/s
Connection, electrical	Screw terminals
Type of fixing	Flange
Material, immersion pocket	Stainless steel
Immersion length	200 mm
Degree of protection	IP54
Dimensions (W x H x D)	60 x 80 x 83 mm

Supplied complete with mounting flange.

Stock No.	Product No.
BPZ:FK-TP/200	**FK-TP/200**

Immersion temperature sensor QAE1612.010

Passive sensor for acquiring the water temperature in pipes and tanks

Data sheet	Q3730
Measuring range, temperature	0...100 °C
Sensing element	Pt1000
Immersion length	100 mm
Connection cable	Screw terminal / cable entry via cable entry gland
Degree of protection	IP42
Dimensions (W x H x D)	151 x 56 x 72 mm

Stock No.	Product No.
S55720-S197	QAE1612.010

Immersion temperature sensor, passive QAE21..

Data sheet	N1781
Time constant	With protection pocket: 30 s Without protection pocket: 8 s
Material, immersion pocket	Stainless steel
Connection, electrical	Screw terminals
Dimensions (W x H x D)	80 x 60 x 31 mm

Fixing is made by protection pocket or compression fitting. If for the nominal pressure no entry can be found in the table, no protection pocket is included as standard and the nominal pressure depends on the protection pocket used (see accessories). By using the compression fitting AQE2102 the nominal pressure is 16 bar (PN16).

Range overview QAE21.. Immersion temperature sensor with protection pocket:

Sensing element, temperature	Measuring range, temperature [°C]	Immersion length [mm]	Measurement accuracy [K]	Degree of protection	PN class	Stock No.	Product No.
LG-Ni1000	-30...130	100	At -30...130 °C: ±1.3	IP42	PN 10	BPZ:QAE2120.010	**QAE2120.010**
LG-Ni1000	-30...130	150	At -30...130 °C: ±1.3	IP42	PN 10	BPZ:QAE2120.015	**QAE2120.015**

NEW PRODUCT

Range overview QAE21.. Immersion temperature sensor without protection pocket:

Sensing element, temperature	Measuring range, temperature [°C]	Immersion length [mm]	Measurement accuracy [K]	Degree of protection	PN class	Stock No.	Product No.
Pt100	-30...130	100	At -30...130 °C: ±0,95	IP42		BPZ:QAE2111.010	**QAE2111.010**
Pt100	-30...130	150	At -30...130 °C: ±0.95	IP42		BPZ:QAE2111.015	**QAE2111.015**
Pt1000	-30...130	100	At -30...130 °C: ±0.95	IP42		BPZ:QAE2112.010	**QAE2112.010**
Pt1000	-30...130	150	At -30...130 °C: ±0.95	IP42		BPZ:QAE2112.015	**QAE2112.015**
LG-Ni1000	-30...130	100	At -30...130 °C: ±1.3	IP42		BPZ:QAE2121.010	**QAE2121.010**
LG-Ni1000	-30...130	150	At -30...130 °C: ±1,3	IP42		BPZ:QAE2121.015	**QAE2121.015**
NTC 10k	-30...125	100	At -30...125 °C: ±1.7	IP42		BPZ:QAE2130.010	**QAE2130.010**
NTC 10k	-30...125	150	At -30...125 °C: ±1.7	IP42		BPZ:QAE2130.015	**QAE2130.015**

Protecktion pocket are not included and needs to be ordered seperately

6

QAE21..4

Immersion temperature sensor active

Data sheet	N1782
Measuring range, temperature	-10...120 °C
Time constant	With protection pocket: 30 s
Material, immersion pocket	Stainless steel
Connection, electrical	Screw terminals
Measurement accuracy	At 0...70 °C: ±1 K At -40...120 °C: ±1.4 K
Power consumption	≤ 1 VA
Degree of protection	IP54
Dimensions (W x H x D)	80 x 88 x 39 mm

Fixing is made by protection pocket or compression fitting. No protection pocket is included as standard. The nominal pressure depends on the protection pocket used (see accessories). By using the compression fitting AQE2102 the nominal pressure is 16 bar (PN 16).

Range overview QAE21..4

Analog output, signal	Operating voltage	Immersion length [mm]	Stock No.	Product No.
DC 0...10 V	AC 24 V DC 13.5...35 V	100	BPZ:QAE2164.010	**QAE2164.010**
DC 0...10 V	AC 24 V DC 13.5...35 V	150	BPZ:QAE2164.015	**QAE2164.015**
DC 4...20 mA	DC 13.5...35 V	100	BPZ:QAE2174.010	**QAE2174.010**
DC 4...20 mA	DC 13.5...35 V	150	BPZ:QAE2174.015	**QAE2174.015**

Accessories for QAE21..

Packaging unit	Protection pocket [LW7]	Material	PN class	Stock No.	Product No.
1 pc	100 mm, G½"	Stainless steel V4A	PN 16	BPZ:ALT-SS100	**ALT-SS100**
1 pc	150 mm, G½"	Stainless steel V4A	PN 16	BPZ:ALT-SS150	**ALT-SS150**
1 pc	100 mm, G½" (with flange)	Stainless steel V4A	PN 40	BPZ:ALT-SSF100	**ALT-SSF100**
1 pc	150 mm, G½" (with flange)	Stainless steel V4A	PN 40	BPZ:ALT-SSF150	**ALT-SSF150**
1 pc	100 mm, G½"	Brass, nickel-plated	PN 10	BPZ:ALT-SB100	**ALT-SB100**
1 pc	150 mm, G½"	Brass, nickel-plated	PN 10	BPZ:ALT-SB150	**ALT-SB150**

Product Title	Data sheet	Stock No.	Product No.
Compression fitting with threaded nipple ½"	N1781	BPZ:AQE2102	**AQE2102**

Immersion temperature sensor Ø 6 mm with cable and fitting — QAE26.9

With connecting cable

Data sheet	N1790
Measuring range, temperature	-40...180 °C
Sensing element, temperature	LG-Ni1000
Time constant	<3 s
Connection cable	Silicone, 2-wire
Cable length	1.2 m
Material, immersion pocket	Stainless steel
Immersion length	25...260 mm
Diameter	6 mm
Type of fixing	Thread R ¼ "
PN class	PN 40
Degree of protection	IP64

Stock No.	Product No.
BPZ:QAE26.9	**QAE26.9**

Immersion temperature sensur Ø 4 mm with cable and fitting — QAE26.9..

With connecting cable

Data sheet	N1790
Time constant	<2.5 s
Cable length	2 m
Type of fixing	R¼ " thread
PN class	PN 16
Measurement accuracy	At -50...180 °C: ±1.75 K
Diameter	4 mm
Degree of protection	IP64
Material, immersion pocket	Stainless steel
Sensing element, temperature	LG-Ni1000

Other technical data identical to QAE26.9

Packaging unit QAE1020.024 100 pieces

Range overview QAE26.9..

Immersion length [mm]	Measuring range, temperature [°C]	Connection cable	Stock No.	Product No.
15...65	-50...180	Silicone	BPZ:QAE26.90	**QAE26.90**
15...125	-50...180	Silicone	BPZ:QAE26.91	**QAE26.91**
15...240	-50...180	Silicone	BPZ:QAE26.93	**QAE26.93**
15...465	-50...180	Silicone	BPZ:QAE26.95	**QAE26.95**
15...240	-5...105	PVC	BPZ:QAE1020.024	**QAE1020.024**

QAE3..

Immersion temperature sensor for high temperature

With connection head made of die-cast aluminium.
No protection pocket required.

Data sheet	N1794
Sensing element, temperature	Pt100
Time constant	25 s
Connection, electrical	Screw terminals
Material, immersion pocket	Stainless steel
Type of fixing	Protection pocket G½ "
Material, housing	Die-cast aluminum
PN class	PN 40
Degree of protection	IP65
Dimensions (W x H x D)	69 x 92 x 81 mm

Range overview QAE3..

Measuring range, temperature [°C]	Analog output, signal	Immersion length [mm]	Operating voltage	Stock No.	Product No.
-50...200	Passive	100		BPZ:QAE3010.010	**QAE3010.010**
-50...200	Passive	160		BPZ:QAE3010.016	**QAE3010.016**
0...200	DC 4...20 mA	100	DC 7.5...30	BPZ:QAE3075.010	**QAE3075.010**
0...200	DC 4...20 mA	160	DC 7.5...30	BPZ:QAE3075.016	**QAE3075.016**

FT-TP/..

Immersion temperature sensor Pt100, short time constant, for high temperature

With connecting head to DIN.
No protection pocket required.

Data sheet	N1797
Measuring range, temperature	-100...450 °C
Sensing element, temperature	Pt100
Time constant	Air v = 1 m/s: <100 s Water v = 0,4 m/s: <5 s
Connection, electrical	Screw terminals
Type of fixing	Protection pocket G ½ "
Material, immersion pocket	Stainless steel
PN class	PN 40
Degree of protection	IP54
Dimensions (W x H x D)	60 x 80 x 85 mm

Range overview FT-TP/..

Immersion length [mm]	Stock No.	Product No.
100	BPZ:FT-TP/100	**FT-TP/100**
400	BPZ:FT-TP/400	**FT-TP/400**

QAD2..

Strap-on temperature sensor

Data sheet	N1801
Connection, electrical	Screw terminals
Degree of protection	IP42
Dimensions (W x H x D)	60 x 67 x 43 mm

Supplied complete with strap for pipe diameters from 15...140 mm.

Range overview QAD2..

Sensing element, temperature	Measuring range, temperature [°C]	Time constant [s]	Stock No.	Product No.
LG-Ni1000	-30...130	3	BPZ:QAD22	**QAD22**
Pt100	-30...130	3	BPZ:QAD2010	**QAD2010**
Pt1000	-30...130	3	BPZ:QAD2012	**QAD2012**
NTC 10k	-30...125	6	BPZ:QAD2030	**QAD2030**

6

QAD26.220

Strap-on temperature sensor with cable LG-Ni1000

With cable, without housing

Data sheet	N1802
Measuring range, temperature	-35...90 °C
Sensing element	LG-Ni 1000
Time constant	<10 s
Connection cable	2-wire
Cable length	2 m
Degree of protection	IP65

Supplied complete with strap for pipe diameters from 10...50 mm.

Stock No.	Product No.
BPZ:QAD26.220	**QAD26.220**

Outside sensor, passive

QAC..

For acquiring the outside temperature and – to a lesser degree – solar radiation, the effect of wind and the temperature of the wall.

Data sheet	N1811
Connection, electrical	Screw terminals
Degree of protection	IP54
Material	Plastic (ASA)

Range overview QAC..

Measuring range, temperature [°C]	Sensing element, temperature	Measurement accuracy [°C]	Time constant [min]	Stock No.	Product No.
-50...70	Pt100	±0.3 K at 0	14	BPZ:QAC2010	**QAC2010**
-50...70	Pt1000	±0.3 K at 0	14	BPZ:QAC2012	**QAC2012**
-50...70	LG-Ni1000	±0.4 K at 0	14	BPZ:QAC22	**QAC22**
-50...70	NTC 575	±1 K at -10...+20	12	BPZ:QAC32	**QAC32**
-40...70	NTC 10k	±0,46 K at 25	14	BPZ:QAC2030	**QAC2030**

Outside temperature sensor active

QAC31..

The QAC31.. may be used as an high-quality room sensor.

Data sheet	N1814
Measuring range, temperature	-50...50 °C
Time constant	20 min
Connection, electrical	Screw terminals
Degree of protection	IP65
Sensing element, temperature	Pt1000

Range overview QAC31..

Analog output, signal	Operating voltage	Measurement accuracy [K]	Stock No.	Product No.
DC 0...10 V	AC 24 V DC 13.5...35 V	At -50...50 °C: ±0.9	BPZ:QAC3161	**QAC3161**
DC 4...20 mA	DC 13.5...35 V	At -50...50 °C: ±0.9	BPZ:QAC3171	**QAC3171**

QAT22

Window pane temperature sensor

Data sheet	N1830
Cable length	1.5 m
Measurement accuracy	At 0 °C: ±0.4 K
Measuring range, temperature	-10...50 °C
Sensing element, temperature	LG-Ni1000
Time constant	30 s
Connection cable	2-wire

Stock No.	Product No.
BPZ:QAT22	**QAT22**

FGT-PT1000

Flue gas temperature sensor Pt1000

For measuring the flue gas temperature in flueways.

Data sheet	N1846
Sensing element, temperature	Pt1000
Measuring range, temperature	-20...400 °C
Connection cable	2-wire, 1.5 m, teflon with steel wire mesh
Material	Stainless steel V4A
Cable length	1.5 m
Material, immersion pocket	Sensor sleeve, stainless steel

Stock No.	Product No.
BPZ:FGT-PT1000	**FGT-PT1000**

Cable temperature sensor (6 x 40.5 mm) for HVAC applications

QAP..

Data sheet	N1831
Time constant	Fitted to pipe: <20 s
Material, protection pocket	Stainless steel
Type of fixing	Cable tie or with accessories
Degree of protection	IP65
Protection pocket	40,5 x 6 mm

Range overview QAP..

Cable length [m]	Sensing element, temperature	Connection cable	Measurement accuracy [K]	Measuring range, temperature [°C]	Stock No.	Product No.
1.5	LG-Ni1000	Silicone	At -30...130 °C: ±1.3	-30...130	BPZ:QAP21.3	**QAP21.3**
8	LG-Ni1000	Silicone	At -30...130 °C: ±1.3	-30...130	BPZ:QAP21.3/8000	**QAP21.3/8000**
1.5	Pt100	Silicone	At -30...130 °C: ±0.95	-30...130	BPZ:QAP2010.150	**QAP2010.150**
1.5	Pt1000	Silicone	At -30...130 °C: ±0.95	-30...130	BPZ:QAP2012.150	**QAP2012.150**
2	LG-Ni1000	PVC	At -30...130 °C: ±1.3	-25...95	BPZ:QAP22	**QAP22**
2	NTC 10k	PVC	At -25...95 °C: ±1.4	-25...95	BPZ:QAP1030.200	**QAP1030.200**

Accessories for QAP..

Product Title	Packaging unit	Data sheet	Stock No.	Product No.
Changeover cable holder for QAP..	Set of 10 pieces	N1831	BPZ:ARG22.1	**ARG22.1**
Aluminium bar attachment for QAP..	Set of 5 pieces	N1831	BPZ:ARG22.2	**ARG22.2**
Terminal housing		N1207	S55700-P131	**RAK-H-M**
Cable holder for protection pocket mounting		N1831	BPZ:421314160	**421314160**

Cable temperature sensor for high-temperature applications (180°C)

QAP21.2

For acquiring the water temperature in flat solar collectors

Data sheet	N1833
Measuring range, temperature	-30...180 °C
Measurement accuracy	At -30...180 °C: ±1.65 K
Sensing element, temperature	LG-Ni1000
Time constant	Fitted to pipe: <20 s
Connection cable	Silicone
Cable length	1.5 m
Material, protection pocket	Stainless steel
Degree of protection	IP67
Protection pocket	50 x 6 mm

Stock No.	Product No.
BPZ:QAP21.2	**QAP21.2**

QAZ21.68..

Cable temperature sensor for use in refrigeration plants (-50 °C)

Data sheet	N1848
Measuring range, temperature	-50...80 °C
Sensing element, temperature	LG-Ni1000
Time constant	Fitted to pipework <20 s
Connection cable	Silicone, 2-wire
Material, protection pocket	Stainless steel
Degree of protection	IP67
Protection pocket	50 x 6 mm

Supplied complete with 2 cable ties and sleeve coated with thermal conductive wax for fitting to pipe-work.

Range overview QAZ21.68..

Cable length [m]	Packaging unit	Stock No.	Product No.
2	1 piece	BPZ:QAZ21.682/101	**QAZ21.682/101**
5	100 pieces	BPZ:QAZ21.685/101	**QAZ21.685/101**

6

QAH11..

Cable sensor for fan coil applications

For installation in fan coil units as
- a return air temperature sensor
- a changeover sensor

Data sheet	N1840
Measuring range	For fixed cable
Measuring range, temperature	-20...70 °C
Sensing element, temperature	NTC 3k
Time constant	1.5 min at v = 0 m/s
Cable length	2.5 m

Range overview QAH11..

Connection cable	Packaging unit	Stock No.	Product No.
2-wire, cable complete with connectors	10 pieces	BPZ:QAH11	**QAH11**
2-wire, with ferrules	10 pieces	BPZ:QAH11.1	**QAH11.1**

Accessories for QAH11..

Product Title	Packaging unit	Data sheet	Stock No.	Product No.
Changeover cable holder for QAH11..	10 pieces	N1840	BPZ:ARG86.3	**ARG86.3**

Room sensor for rel. humidity / temperature

QFA20..

For relative humidity and temperature

Data sheet	N1857
Measurement range humidity	0...95 % r.h.
Measurement accuracy	At 0...95 % r.h. and 23 °C: ±5 % At 30...70 % r.h. and 23 °C: ±3 %
Time constant	Humidity <20 s Temperature <8.5 min
Connection, electrical	Screw terminals
Degree of protection	IP30
Dimensions (W x H x D)	90 x 100 x 36 mm

Range overview QFA20..

Signal output humidity	Signal output temperature	Operating voltage	Measuring range, temperature	Display	Stock No.	Product No.
DC 0...10 V		AC 24 V DC 13.5...35 V			BPZ:QFA2000	**QFA2000**
DC 4...20 mA		DC 13.5...35 V			S55720-S114	**QFA2001**
DC 0...10 V	LG-Ni1000	AC 24 V DC 13.5...35 V	0...50 °C		BPZ:QFA2020	**QFA2020**
DC 0...10 V	DC 0...10 V	AC 24 V DC 13.5...35 V	0...50 °C -35...35 °C -40...70 °C		BPZ:QFA2060	**QFA2060**
DC 0...10 V	DC 0...10 V	AC 24 V DC 13.5...35 V	0...50 °C -35...35 °C -40...70 °C	LCD	BPZ:QFA2060D	**QFA2060D**
DC 0...10 V	DC 0...10 V	AC 24 V DC 13.5...35 V	0...50 °C -35...35 °C -40...70 °C		S55720-S105	**QFA2060N**
DC 4...20 mA	DC 4...20 mA	DC 13.5...35 V	0...50 °C -35...35 °C -40...70 °C		S55720-S115	**QFA2071**

Variants QFA..N = no logo

Room sensors for rel. Humidity / temperature for demanding requirements

QFA31..

For relative humidity and temperature

Data sheet	N1858
Measurement range humidity	0...100 % r.h.
Measurement accuracy	Humidity at 0...100 % r.h. and 23 °C: ±2 % r.h. Temperature, at 15...35 °C: ±0.6 K Temperature, at 40...70 °C: ±0.8 K
Time constant	Humidity: <20 s Temperature: <8.5 min
Connection, electrical	Screw terminals
Degree of protection	IP65
Dimensions (W x H x D)	80 x 144 x 39 mm

Range overview QFA31..

Signal output humidity	Signal output temperature	Operating voltage	Measuring range, temperature	Display	Stock No.	Product No.
DC 0...10 V		AC 24 V DC 13.5...35 V			BPZ:QFA3100	**QFA3100**
DC 4...20 mA		DC 13.5...35 V			BPZ:QFA3101	**QFA3101**
DC 0...10 V	DC 0...10 V	AC 24 V DC 13.5...35 V	0...50 °C -35...35 °C -40...70 °C		BPZ:QFA3160	**QFA3160**
DC 0...10 V	DC 0...10 V	AC 24 V DC 13.5...35 V	0...50 °C -35...35 °C -40...70 °C	LCD	BPZ:QFA3160D	**QFA3160D**
DC 4...20 mA	DC 4...20 mA	DC 13.5...35 V	0...50 °C -35...35 °C -40...70 °C		BPZ:QFA3171	**QFA3171**
DC 4...20 mA	DC 4...20 mA	DC 13,5...35 V	0...50 °C -35...35 °C -40...70 °C	LCD	BPZ:QFA3171D	**QFA3171D**

6

QFA41..

Room sensors for rel. humidity / temperature for demanding requirements, with calibration certificate

For relative humidity and temperature

Data sheet	N1859
Measurement range humidity	0...100 % r.h.
Measurement accuracy	Humidity at 0...100 % r.h. and 23 °C: ±2 % r.h. Temperature, at 15...35 °C: ±0.6 K Temperature, at 40...70 °C: ±0.8 K
Time constant	Humidity: <20 s Temperature: <8.5 min
Measuring range, temperature	0...50 °C -35...35 °C -40...70 °C
Connection, electrical	Round connector
Degree of protection	IP65
Dimensions (W x H x D)	80 x 144 x 39 mm

Range overview QFA41..

Signal output humidity	Signal output temperature	Operating voltage	Display	Stock No.	Product No.
DC 0...10 V	DC 0...10 V	AC 24 V DC 13.5...35 V	---	BPZ:QFA4160	**QFA4160**
DC 0...10 V	DC 0...10 V	AC 24 V DC 13,5...35 V	LCD	BPZ:QFA4160D	**QFA4160D**
DC 4...20 mA	DC 4...20 mA	DC 13.5...35 V	---	BPZ:QFA4171	**QFA4171**
DC 4...20 mA	DC 4...20 mA	DC 13,5...35 V	LCD	BPZ:QFA4171D	**QFA4171D**

Accessories for QFA..

Product Title	Data sheet	Stock No.	Product No.
Filter cap for humidity sensor	N1858	BPZ:AQF3101	**AQF3101**
Exchangeable measuring tip	N1858	BPZ:AQF3150	**AQF3150**
Remote sensing cable 3 m for sensor tip.	N1859	BPZ:AQY2010	**AQY2010**
Exchangeable measuring tip, with calibration certificate	N1859	BPZ:AQF4150	**AQF4150**

Radiation shield for exterior wall mounting **AQF3100**

In combination with QFA31... room sensors.

Data sheet N1858

Stock No.	Product No.
BPZ:AQF3100	**AQF3100**

Service-Set **AQF3153**

The service set comprises three measuring tips without sensor element. Each tip signals a predefined temperature and humidity value to the basic unit:

- 85%, 40 °C
- 50%, 23 °C
- 20%, 5 °C

The fixed values are available at the signal outputs. The accuracy is the same as for the test function. The measuring tips can be exchanged in operation.

Data sheet

Stock No.	Product No.
BPZ:AQF3153	**AQF3153**

AQR2540..

Base modules for temperature and humidity measurement

Data sheet	N1410
Operating voltage	AC 24 V DC15...36 V
Analog output, signal	DC 0...10 V DC 2...10 V DC 0...5 V DC 0...20 mA DC 4...20 mA DC 0...10 mA
Connection, electrical	Screw terminals

Range overview AQR2540..

Mechanical design	Dimensions (W x H)	Stock No.	Product No.
EU (CEE/VDE)	70.8 x 70.8 mm	S55720-S142	**AQR2540NF**
UK (British Standard)	83 x 83 mm	S55720-S143	**AQR2540NH**
IT (3 modular)	110 x 64 mm	S55720-S144	**AQR2540NG**
US (UL)	64 x 110 mm	S55720-S145	**AQR2540NJ**

6

AQR2570..

Base module with KNX / PL-link for temperature and humidity measurement

Data sheet	N1411
Voltage supply	KNX bus
Communication	KNX (S-mode and LTE-mode) / PL-Link
Analog inputs	Passive temperature sensor NTC 10k
Analog inputs, number	1
Digital inputs	Potential-free contacts
Digital inputs, number	2
Connection, electrical	Bus connection: spring terminal sensor inputs: 4 screw terminals

Range overview AQR2570..

Mechanical design	Dimensions (W x H)	Stock No.	Product No.
EU (CEE/VDE)	70.8 x 70.8 mm	S55720-S203	AQR2570NF
UK (British Standard)	83 x 83 mm	S55720-S204	AQR2570NH
IT (3 Modular)	110 x 64 mm	S55720-S205	AQR2570NG
US (UL)	64 x 110 mm	S55720-S206	AQR2570NJ

AQR253..

Front modules for base modules

Data sheet	N1410
Color	Titanium white
Degree of protection	IP30
Dimensions (W x H)	55 x 55 mm

NEW PRODUCT

Range overview AQR253..

Measuring range, temperature	Signal output temperature	Measurement range humidity	Stock No.	Product No.
0...50 °C	Active		S55720-S136	**AQR2532NNW**
		0...100 %	S55720-S140	**AQR2533NNW**
0...50 °C	Active	0...100 %	S55720-S141	**AQR2535NNW**
0...50 °C	Active LG-Ni1000	0...100 %	S55720-S138	**AQR2534ANW**
0...50 °C	Active NTC 10k	0...100 %	S55720-S139	**AQR2534FNW**

Frames for front modules AQR253..

Mechanical design	Color	Dimensions (W x H)	Stock No.	Product No.
DELTA line (CEE/VDE)	Titanium white	80.2 x 80.2 mm	S55720-S158	**AQR2510NFW**
DELTA miro (British Standard)	Titanium white	90 x 90 mm	S55720-S159	**AQR2510NHW**
DELTA azio (UL / 3 Modular)	Titanium white	80 x 120 mm / 120 x 80 mm	S55720-S160	**AQR2510NGW**

QFA1001

Room hygrostat, setpoint setting range 30...90 % r.h., external setpoint adjustment

2-position controller with humidity sensor
External setpoint adjustment

Data sheet	N1518
Setpoint setting range	30...90 % r.h.
Switching differential	6 % r.h.
Time constant	At v = 0.2 m/s: 5 min
Digital outputs	1-pin Potential-free Changeover contact
Connection, electrical	Screw terminals
Digital output, switching voltage	AC 230 V
Digital output, switching current	5 (3) A
Degree of protection	IP20
Dimensions (W x H x D)	76 x 76 x 34 mm

Stock No.	Product No.
BPZ:QFA1001	**QFA1001**

QFA1000

Room hygrostat, setpoint setting range 30...90 % r.h., setpoint adjuster inside device

2-position controller with humidity sensor
Setpoint adjuster inside device

Data sheet	N1518
Setpoint setting range	30...90 % r.h.
Switching differential	6 % r.h.
Time constant	At v = 0.2 m/s: 5 min
Digital outputs	1-pin Potential-free Changeover contact
Connection, electrical	Screw terminals
Digital output, switching voltage	AC 230 V
Digital output, switching current	5 (3) A
Degree of protection	IP20
Dimensions (W x H x D)	76 x 76 x 34 mm

Stock No.	Product No.
BPZ:QFA1000	**QFA1000**

Duct sensor for humidity (0...10 V) and temperature (0...10 V) QFM1660

Active sensor for acquiring the air humidity and temperature in air duct

Data sheet	Q3731
Operating voltage	AC 24 V
Signal output humidity	DC 0...10 V
Signal output temperature	DC 0...10 V
Measurement range humidity	10...90% r. h.
Measuring range, temperature	0...50 °C
Measurement accuracy	Temperature at AC 24 V and 25 °C:±0.8 °C Humidity at 10...90% r. h. and 25 °C/20 °C:±5% r. h.
Degree of protection	IP42

Stock No.	Product No.
S55720-S198	QFM1660

Duct sensor for rel. humidity / temperature QFM21..

For relative humidity and temperature

Data sheet	N1864
Measurement range humidity	0...95 % r.h.
Measurement accuracy	Humidity at 30...70 % r.h. and 23 °C: ±3 % r.h. Temperature, at 15...35 °C: ±0.8 K Temperature, at 35...50 °C: ±1.0 K
Time constant	Humidity: <20 s Temperature in with 2 m/s moved air: <3.5 min
Immersion length	90...154 mm
Connection, electrical	Screw terminals
Type of fixing	Flange
Degree of protection	IP54
Dimensions (W x H x D)	80 x 88 x 39 mm

Range overview QFM21..

Signal output humidity	Signal output temperature	Operating voltage	Measuring range, temperature	Stock No.	Product No.
DC 0...10 V		AC 24 V DC 13.5...35 V		BPZ:QFM2100	**QFM2100**
DC 4...20 mA		DC 13.5...35 V		BPZ:QFM2101	**QFM2101**
DC 0...10 V	LG-Ni1000	AC 24 V DC 13.5...35 V	0...50 °C -35...35 °C -40...70 °C	BPZ:QFM2120	**QFM2120**
DC 0...10 V	DC 0...10 V	AC 24 V DC 13.5...35 V	0...50 °C -35...35 °C -40...70 °C	BPZ:QFM2160	**QFM2160**
DC 0...10 V	DC 0...10 V	AC 24 V DC 13.5...35 V	0...50 °C -35...35 °C -40...70 °C	S55720-S106	**QFM2160N**
DC 4...20 mA	DC 4...20 mA	DC 13.5...35 V	0...50 °C -35...35 °C -40...70 °C	BPZ:QFM2171	**QFM2171**

Variants QFM..N = no logo

NEW PRODUCT

QFM31..

Duct sensors for rel. humidity / temperature for demanding requirements

For relative humidity and temperature.

Data sheet	N1882
Measurement range humidity	0...100 % r.h.
Measurement accuracy	Humidity at 0...100 % r.h. and 23 °C: ±2 % r.h. Temperature, at 15...35 °C: ±0.6 K Temperature, at 40...70 °C: ±0.8 K
Time constant	Humidity: <20 s Temperature in with 2 m/s moved air: <3.5 min
Immersion length	90...206 mm
Connection, electrical	Screw terminals
Type of fixing	Flange
Degree of protection	IP65
Dimensions (W x H x D)	80 x 88 x 39 mm

Range overview QFM31..

Signal output humidity	Signal output temperature	Operating voltage	Measuring range, temperature	Display	Stock No.	Product No.
DC 0...10 V		AC 24 V DC 13.5...35 V			BPZ:QFM3100	**QFM3100**
DC 4...20 mA		DC 13.5...35 V			BPZ:QFM3101	**QFM3101**
DC 0...10 V	DC 0...10 V	AC 24 V DC 13.5...35 V	0...50 °C -35...35 °C -40...70 °C		BPZ:QFM3160	**QFM3160**
DC 0...10 V	DC 0...10 V	AC 24 V DC 13.5...35 V	0...50 °C -35...35 °C -40...70 °C	LCD	BPZ:QFM3160D	**QFM3160D**
DC 4...20 mA	DC 4...20 mA	DC 13.5...35 V	0...50 °C -35...35 °C 0...70 °C		BPZ:QFM3171	**QFM3171**
DC 4...20 mA	DC 4...20 mA	DC 13,5...35 V	0...50 °C -35...35 °C -40...70 °C	LCD	BPZ:QFM3171D	**QFM3171D**

QFM41..

Duct sensor for rel. humidity/temperature for demanding requirements, with calibration certificate

For relative humidity and temperature

Data sheet	N1883
Measurement range humidity	0...100 % r.h.
Measurement accuracy	Humidity at 0...100 % r.h. and 23 °C: ±2 % r.h. Temperature, at 15...35 °C: ±0.6 K Temperature, at 40...70 °C: ±0.8 K
Time constant	Humidity: <20 s Temperature in with 2 m/s moved air: <3.5 min
Immersion length	90...206 mm
Connection, electrical	Round connector
Type of fixing	Flange
Degree of protection	IP65
Dimensions (W x H x D)	80 x 117 x 39 mm

Range overview QFM41..

Signal output humidity	Signal output temperature	Operating voltage	Measuring range, temperature	Stock No.	Product No.
DC 4...20 mA		DC 13.5...35 V		BPZ:QFM4101	**QFM4101**
DC 0...10 V	DC 0...10 V	AC 24 V DC 13.5...35 V	0...50 °C -35...35 °C -40...70 °C	BPZ:QFM4160	**QFM4160**
DC 4...20 mA	DC 4...20 mA	DC 13.5...35 V	0...50 °C -35...35 °C -40...70 °C	BPZ:QFM4171	**QFM4171**

Accessories for QFM..

Product Title	Data sheet	Stock No.	Product No.
Filter cap for humidity sensor	N1858	BPZ:AQF3101	**AQF3101**
Exchangeable measuring tip	N1858	BPZ:AQF3150	**AQF3150**
Exchangeable measuring tip, with calibration certificate	N1859	BPZ:AQF4150	**AQF4150**

AQF3153

Service-Set

The service set comprises three measuring tips without sensor element. Each tip signals a predefined temperature and humidity value to the basic unit:

- 85%, 40 °C
- 50%, 23 °C
- 20%, 5 °C

The fixed values are available at the signal outputs. The accuracy is the same as for the test function. The measuring tips can be exchanged in operation.

Data sheet

	Stock No.	Product No.
	BPZ:AQF3153	**AQF3153**

6

Duct hygrostat, setpoint setting range 15...95 % r.h. QFM81.2

On / off hygrostat with humidity sensor.
External setpoint adjustment.

Data sheet	N1514
Setpoint setting range	15...95 % r.h.
Switching differential	4 % r.h.
Digital outputs	1-pin Potential-free Changeover contact
Digital output, switching voltage	AC 250 V
Digital output, switching current	5 (3) A
Immersion length	130...156 mm
Degree of protection	IP30
Dimensions (W x H x D)	73 x 140 x 64 mm

Supplied complete with mounting flange.

Stock No.	Product No.
BPZ:QFM81.2	**QFM81.2**

Room hygrostat, setpoint setting range 15...95 % r.h., setpoint adjuster inside device QFM81.21

On / off hygrostat with humidity sensor.
Setpoint adjuster inside device.

Data sheet	N1514
Setpoint setting range	15...95 % r.h.
Switching differential	4 % r.h.
Digital outputs	1-pin Potential-free Changeover contact
Digital output, switching voltage	AC 250 V
Digital output, switching current	5 (3) A
Immersion length	130...156 mm
Degree of protection	IP55
Dimensions (W x H x D)	73 x 140 x 64 mm

Stock No.	Product No.
BPZ:QFM81.21	**QFM81.21**

QXA2000

Condensation monitor

For monitoring and preventing condensation in buildings with chilled ceilings or in ventilation, air conditioning and heating plant.

Data sheet	N1542
Operating voltage	AC 24 V DC 24 V
Power consumption	1 VA
Digital outputs	1-pin Potential-free Changeover contact
Digital output, switching voltage	AC/DC 1...48 V
Digital output, switching current	0.001...0.5 A
Switching point	95 ±4 % r.h.
Connection, electrical	Screw terminals
Degree of protection	IP40

Stock No.	Product No.
BPZ:QXA2000	**QXA2000**

QXA2001

Condensation monitor with remote sensor head (cable length 1.5 m)

For monitoring and preventing condensation in buildings with chilled ceilings or in ventilation, air conditioning and heating plant.

Data sheet	N1542
Operating voltage	AC 24 V DC 24 V
Power consumption	1 VA
Digital outputs	1-pin Potential-free Changeover contact
Digital output, switching voltage	AC/DC 1...48 V
Digital output, switching current	0.001...0.5 A
Switching point	95 ±4 % r.h.
Connection, electrical	Screw terminals
Degree of protection	IP40

Stock No.	Product No.
BPZ:QXA2001	**QXA2001**

AC 230 V extension module for QXA2000

AQX2000

The extension module facilitates connection of the QXA2000 to the Desigo room controllers RXC20.., 21.., 22.. and 30.. and direct switching of voltages up to AC/DC 250 V.

Data sheet	N1542
Primary voltage	AC 230 V
Secondary voltage	AC 24 V
Digital input, contact query	DC 37 V
Dimensions (W x H x D)	80 x 110 x 62 mm
Relay outputs, number	1
Relay outputs	Potential-free Changeover contact
Relay output, switching voltage	AC/DC 12...250 V
Relay output, switching current	0.01...6 A
Power consumption	4 VA
Connection, electrical	Screw terminals
Degree of protection	IP20

	Stock No.	Product No.
	BPZ:AQX2000	**AQX2000**

Accessories for AQX2000

Product Title	Data sheet	Stock No.	Product No.
Terminal cover for RXC4.. and AQX2000	N3842	BPZ:RXZ40.1	**RXZ40.1**

QPA..

Room air quality sensor CO_2 / temperature / rel. Humidity / VOC

Data sheet	N1961
Operating voltage	AC 24 V DC 15...35 V
Power consumption	2 VA
Analog output, signal	DC 0...5 V DC 0...10 V
Ambient temperature, operation	0...50 °C
Connection, electrical	Screw terminals
Degree of protection	IP30
Dimensions (W x H x D)	90 x 100 x 36 mm
Time constant	CO_2: <5 min Humidity: <20 s Temperature: <8.5 min

Note:Not suited for safety-related applications!

Range overview QPA..

Measuring range	Measuring range, temperature	Measurement range humidity	Display	Stock No.	Product No.
VOC: 0...100 %				S55720-S119	**QPA1000**
VOC: 0...100 %				S55720-S120	**QPA1000N**
CO_2: 0...2000 ppm				BPZ:QPA2000	**QPA2000**
CO_2: 0...2000 ppm				S55720-S101	**QPA2000N**
CO_2: 0...2000 ppm CO_2+VOC: 0...2000 ppm				BPZ:QPA2002	**QPA2002**
CO_2: 0...2000 ppm CO_2+VOC: 0...2000 ppm			LCD	BPZ:QPA2002D	**QPA2002D**
CO_2: 0...2000 ppm CO_2+VOC: 0...2000 ppm				S55720-S102	**QPA2002N**
CO_2: 0...2000 ppm	0...50 °C -35...35 °C			BPZ:QPA2060	**QPA2060**
CO_2: 0...2000 ppm	0...50 °C -35...35 °C		LCD	BPZ:QPA2060D	**QPA2060D**
CO_2: 0...2000 ppm	0...50 °C -35...35 °C			S55720-S103	**QPA2060N**
CO_2: 0...2000 ppm	0...50 °C -35...35 °C	0...95 % r.H.		BPZ:QPA2062	**QPA2062**
CO_2: 0...2000 ppm	0...50 °C -35...35 °C	0...95 % r.H.	LCD	BPZ:QPA2062D	**QPA2062D**
CO_2: 0...2000 ppm	selectable			S55720-S121	**QPA2080**
CO_2: 0...2000 ppm	selectable		LCD	S55720-S122	**QPA2080D**

With the QPA2080 and QPA2080D the passive temperature element is freely selectable, enclosed in the delivery are LG-Ni1000, Pt1000, Pt100, NTC 10kOhm

Variants QPA..N = no logo

Indoor air quality controller with integrated VOC sensor for mixed gas

QPA84

In ventilation plant to optimize indoor air quality and consumption of energy by means of demand-controlled ventilation.

Data sheet	N1571
Operating voltage	AC 230 V
Power consumption	0.5 VA
Measured variable	Mixed gas (VOC)
Digital outputs	Non-floating Switching contact
Digital output, switching voltage	AC 230 V
Digital output, switching current	8 (6.8) A
Connection, electrical	Screw terminals
Degree of protection	IP30
Dimensions (W x H x D)	96 x 101 x 39 mm

	Stock No.	Product No.
	BPZ:QPA84	**QPA84**

6

AQR2547..

Base modules with integrated VOC measurement

Data sheet	N1410
Operating voltage	AC 24 V DC15...36 V
Analog output, signal	DC 0...10 V DC 2...10 V DC 0...5 V DC 0...20 mA DC 4...20 mA DC 0...10 mA
Measuring range	VOC: 0...100 %
Connection, electrical	Screw terminals

Range overview AQR2547..

Mechanical design	Dimensions (W x H)	Stock No.	Product No.
EU (CEE/VDE)	70.8 x 70.8 mm	S55720-S146	**AQR2547NF**
UK (British Standard)	83 x 83 mm	S55720-S149	**AQR2547NH**
IT (3 modular)	110 x 64 mm	S55720-S152	**AQR2547NG**
US (UL)	64 x 110 mm	S55720-S155	**AQR2547NJ**

6

AQR253..

Front modules for base modules

Data sheet	N1410
Color	Titanium white
Degree of protection	IP30
Dimensions (W x H)	55 x 55 mm

Range overview AQR253..

Measuring range, temperature	Signal output temperature	Measurement range humidity	Stock No.	Product No.
			S55720-S137	**AQR2530NNW**
0...50 °C	Active		S55720-S136	**AQR2532NNW**
		0...100 %	S55720-S140	**AQR2533NNW**
0...50 °C	Active	0...100 %	S55720-S141	**AQR2535NNW**
0...50 °C	Active LG-Ni1000	0...100 %	S55720-S138	**AQR2534ANW**
0...50 °C	Active NTC 10k	0...100 %	S55720-S139	**AQR2534FNW**

Frames for front modules AQR253..

Mechanical design	Color	Dimensions (W x H)	Stock No.	Product No.
DELTA line (CEE/VDE)	Titanium white	80.2 x 80.2 mm	S55720-S158	**AQR2510NFW**
DELTA miro (British Standard)	Titanium white	90 x 90 mm	S55720-S159	**AQR2510NHW**
DELTA azio (UL / 3 Modular)	Titanium white	80 x 120 mm / 120 x 80 mm	S55720-S160	**AQR2510NGW**

Base modules with integrated CO_2 measurement

AQR2546..

Data sheet	N1410
Operating voltage	AC 24 V DC15...36 V
Analog output, signal	DC 0...10 V DC 2...10 V DC 0...5 V DC 0...20 mA DC 4...20 mA DC 0...10 mA
Measuring range	CO_2: 0...2000 ppm
Connection, electrical	Screw terminals

Range overview AQR2546..

Mechanical design	Dimensions (W x H)	Stock No.	Product No.
EU (CEE/VDE)	70.8 x 70.8 mm	S55720-S147	**AQR2546NF**
UK (British Standard)	83 x 83 mm	S55720-S150	**AQR2546NH**
IT (3 modular)	110 x 64 mm	S55720-S153	**AQR2546NG**
US (UL)	64 x 110 mm	S55720-S156	**AQR2546NJ**

6

Base modules with KNX / PL-link for CO_2 measurement

AQR2576..

Data sheet	N1411
Voltage supply	KNX bus
Communication	KNX (S-mode and LTE-mode) / PL-Link
Analog inputs	Passive temperature sensor NTC 10k
Analog inputs, number	1
Digital inputs	Potential-free contacts
Digital inputs, number	2
Measuring range	CO_2: 0...5000 ppm
Connection, electrical	Bus connection: spring terminal sensor inputs: 4 screw terminals

Range overview AQR2576..

Mechanical design	Dimensions (W x H)	Stock No.	Product No.
	70.8 x 70.8 mm	S55720-S207	AQR2576NF
UK (British Standard)	83 x 83 mm	S55720-S208	AQR2576NH
IT (3 Modular)	110 x 64 mm	S55720-S209	AQR2576NG
US (UL)	64 x 110 mm	S55720-S210	AQR2576NJ

Front modules for base modules

AQR253..

Data sheet	N1410
Color	Titanium white
Degree of protection	IP30
Dimensions (W x H)	55 x 55 mm

NEW PRODUCT

Range overview AQR253..

Measuring range, temperature	Signal output temperature	Measurement range humidity	Display	Stock No.	Product No.
				S55720-S137	**AQR2530NNW**
0...50 °C	Active			S55720-S136	**AQR2532NNW**
		0...100 %		S55720-S140	**AQR2533NNW**
0...50 °C	Active	0...100 %		S55720-S141	**AQR2535NNW**
0...50 °C	Active LG-Ni1000	0...100 %		S55720-S138	**AQR2534ANW**
0...50 °C	Active NTC 10k	0...100 %		S55720-S139	**AQR2534FNW**
0...50 °C	Active	0...100 %	Air quality indicator by LED	S55720-S219	AQR2535NNWQ

AQR2535NNWQ only with AQR2570.. (KNX / PL-Link) possible; other combinations on request

Frames for front modules AQR253..

Mechanical design	Color	Dimensions (W x H)	Stock No.	Product No.
DELTA line (CEE/VDE)	Titanium white	80.2 x 80.2 mm	S55720-S158	**AQR2510NFW**
DELTA miro (British Standard)	Titanium white	90 x 90 mm	S55720-S159	**AQR2510NHW**
DELTA azio (UL / 3 Modular)	Titanium white	80 x 120 mm / 120 x 80 mm	S55720-S160	**AQR2510NGW**

6

AQR2548..

Base modules with integrated CO_2 and VOC measurement

Data sheet	N1410
Operating voltage	AC 24 V DC15...36 V
Analog output, signal	DC 0...10 V DC 2...10 V DC 0...5 V DC 0...20 mA DC 4...20 mA DC 0...10 mA
Measuring range	CO_2 + VOC: 0...100 % CO_2: 0...2000 ppm
Connection, electrical	Screw terminals

Range overview AQR2548..

Mechanical design	Dimensions (W x H)	Stock No.	Product No.
EU (CEE/VDE)	70.8 x 70.8 mm	S55720-S148	**AQR2548NF**
UK (British Standard)	83 x 83 mm	S55720-S151	**AQR2548NH**
IT (3 modular)	110 x 64 mm	S55720-S154	**AQR2548NG**
US (UL)	64 x 110 mm	S55720-S157	**AQR2548NJ**

Front modules for base modules

AQR253..

Data sheet	N1410
Color	Titanium white
Degree of protection	IP30
Dimensions (W x H)	55 x 55 mm

Range overview AQR253..

Measuring range, temperature	Signal output temperature	Measurement range humidity	Stock No.	Product No.
			S55720-S137	**AQR2530NNW**
0...50 °C	Active		S55720-S136	**AQR2532NNW**
		0...100 %	S55720-S140	**AQR2533NNW**
0...50 °C	Active	0...100 %	S55720-S141	**AQR2535NNW**
0...50 °C	Active LG-Ni1000	0...100 %	S55720-S138	**AQR2534ANW**
0...50 °C	Active NTC 10k	0...100 %	S55720-S139	**AQR2534FNW**

Frames for front modules AQR253..

Mechanical design	Color	Dimensions (W x H)	Stock No.	Product No.
DELTA line (CEE/VDE)	Titanium white	80.2 x 80.2 mm	S55720-S158	**AQR2510NFW**
DELTA miro (British Standard)	Titanium white	90 x 90 mm	S55720-S159	**AQR2510NHW**
DELTA azio (UL / 3 Modular)	Titanium white	80 x 120 mm / 120 x 80 mm	S55720-S160	**AQR2510NGW**

QPM..

Duct air quality sensor CO_2/ temperature / rel. Humidity / VOC

Data sheet	N1962
Operating voltage	AC 24 V DC 15...35 V
Power consumption	2 VA
Analog output, signal	DC 0...5 V DC 0...10 V
Ambient temperature, operation	-5...45 °C
Max. air velocity	≤ 10 m/s
Connection, electrical	Screw terminals
Degree of protection	IP54
Dimensions (W x H x D)	80 x 88 x 274 mm
Time constant	CO_2: <5 min Humidity: <20 s Temperature: <3.5 min

Note: Not suited for safety-related applications!

Range overview QPM..

Measuring range	Measuring range, temperature	Measurement range humidity	Immersion length [mm]	Display	Stock No.	Product No.
VOC: 0...100 %			70...135		S55720-S123	**QPM1100**
CO_2: 0...2000 ppm			70...135		BPZ:QPM2100	**QPM2100**
CO_2: 0...2000 ppm			70...135		S55720-S104	**QPM2100N**
CO_2: 0...2000 ppm CO_2+VOC: 0...2000 ppm			70...135		BPZ:QPM2102	**QPM2102**
CO_2: 0...2000 ppm CO_2+VOC: 0...2000 ppm			70...135	LCD	BPZ:QPM2102D	**QPM2102D**
CO_2: 0...2000 ppm	0...50 °C -35...35 °C		100...165		BPZ:QPM2160	**QPM2160**
CO_2: 0...2000 ppm	0...50 °C -35...35 °C		100...165	LCD	BPZ:QPM2160D	**QPM2160D**
CO_2: 0...2000 ppm	0...50 °C -35...35 °C	0...95 % r.H.	100...165		BPZ:QPM2162	**QPM2162**
CO_2: 0...2000 ppm	0...50 °C -35...35 °C	0...95 % r.H.	100...165	LCD	BPZ:QPM2162D	**QPM2162D**
CO_2: 0...2000 ppm			100...165		S55720-S124	**QPM2180**

The passive temperature element within the QPM2180 is freely selectable, enclosed in the delivery are LG-Ni1000, Pt1000, Pt100, NTC 10kOhm

Variants QPM..N = no logo

Air duct differential pressure sensor, DC 0...10 V

QBM65..

For use with air or nonaggressive gases, for extremely demanding accuracy and quality requirements.
With diaphragm sensing element.
Availabe with pressure-linear or extracting-the-root characteristic and digital display. With extracting-the-root characteristic, the pressure measuring range is adjustable.

Data sheet	N1916
Operating voltage	AC 24 V DC 13.5...33 V
Power consumption	0.5 VA
Analog output, signal	DC 0...10 V
Sensing element	Pressure diaphragm
Response time	<10 ms
Pressure conneciton	Connection branch, 6.2 mm dia.
Connection, electrical	Screw terminals
Degree of protection	IP54
Dimensions (W x H x D)	101 x 86 x 49 mm

CE-, UL- and CSA-listed.
Supplied complete with PVC connecting tube of 2 m.

Range overview QBM65.. with pressure-linear characteristic

Measuring range, pressure [Pa]	Stock No.	Product No.
0...100	BPZ:QBM65-1	**QBM65-1**
-50...50	BPZ:QBM65-1U	**QBM65-1U**
0...300	BPZ:QBM65-3	**QBM65-3**
0...500	BPZ:QBM65-5	**QBM65-5**
0...1000	BPZ:QBM65-10	**QBM65-10**
0...2500	BPZ:QBM65-25	**QBM65-25**

Range overview QBM65.. with digital display and pressure-linear characteristic

Measuring range, pressure [Pa]	Stock No.	Product No.
0...100	BPZ:QBM65.1-1	**QBM65.1-1**
0...300	BPZ:QBM65.1-3	**QBM65.1-3**
0...500	BPZ:QBM65.1-5	**QBM65.1-5**
0...1000	BPZ:QBM65.1-10	**QBM65.1-10**
0...2500	BPZ:QBM65.1-25	**QBM65.1-25**

With the QBM65.1-10 and QBM65.1-25 the value displayed x 10 = measured value

Range overview QBM65.. with extracting-the-root characteristic

Measuring range, pressure [Pa]	Adjustable end value [Pa]	Stock No.	Product No.
0...100	40...100	BPZ:QBM65.2-1	**QBM65.2-1**
0...300	120...300	BPZ:QBM65.2-3	**QBM65.2-3**
0...500	200...500	BPZ:QBM65.2-5	**QBM65.2-5**
0...1000	400...1000	BPZ:QBM65.2-10	**QBM65.2-10**
0...2500	1000...2500	BPZ:QBM65.2-25	**QBM65.2-25**

QBM65-../C

Air duct differential pressure sensor with calibration certificate

Technical data and accessories identical to QFM65...
With plug-in connection.

Data sheet N1919

Range overview QBM65-../C

Measuring range, pressure [Pa]	Stock No.	Product No.
0...100	BPZ:QBM65-1/C	**QBM65-1/C**
0...300	BPZ:QBM65-3/C	**QBM65-3/C**
0...1000	BPZ:QBM65-10/C	**QBM65-10/C**
0...2500	BPZ:QBM65-25/C	**QBM65-25/C**

Accessories for QBM65..

Product Title	Data sheet	Stock No.	Product No.
Mounting bracket for differenential pressure sensor for air	N1916	BPZ:AQB2000	**AQB2000**
Top hat rail adapter for differential pressure sensor for air	N1910	BPZ:AQB21.2	**AQB21.2**
Air duct probe for simple, quick and airtight mounting	N1589	BPZ:FK-PZ1	**FK-PZ1**
Air duct probe for accurate measurements	N1589	BPZ:FK-PZ2	**FK-PZ2**
Air duct probe for differential pressure sensor, fixed length	N1589	BPZ:FK-PZ3	**FK-PZ3**

Differential pressure sensor, DC 0...10 V

QBM66..

With pressure-linear characteristic.
For use with air or nonaggressive gases, for general HVAC applications. With diaphragm sensing element and selectable pressure measuring ranges.

Data sheet	N1910
Operating voltage	AC 24 V DC 13.5...33 V
Power consumption	0.5 VA
Sensing element	Pressure diaphragm
Time constant	<1 s
Connection, electrical	Screw terminals
Degree of protection	IP42
Dimensions (W x H x D)	92 x 94 x 49 mm
Analog output, signal	DC 0...10 V
Pressure conneciton	Connection branch, 6.2 mm dia.

Supplied complete with set of 2 air duct connectors
and PVC tube of 2 m.

Range overview QBM66..

Measuring range, pressure [Pa]	Stock No.	Product No.
0...100 0...200	BPZ:QBM66.201	**QBM66.201**
0...250 0...500	BPZ:QBM66.202	**QBM66.202**
0...1500 0...3000	BPZ:QBM66.203	**QBM66.203**
0...500 0...1000	BPZ:QBM66.204	**QBM66.204**

Accessories for QBM66..

Product Title	Data sheet	Stock No.	Product No.
Mounting bracket for differenential pressure sensor for air	N1916	BPZ:AQB2000	**AQB2000**
Top hat rail adapter for differential pressure sensor for air	N1910	BPZ:AQB21.2	**AQB21.2**

Differential pressure sensor air and non-aggressive gas QBM..

QBM75../C

Air duct differential pressure sensor, DC 4...20 mA, with calibration certificate

For use with air and nonaggressive gases. For extremely demanding accuracy and quality requirements. With diaphragm sensing element.

Data sheet	N1919
Operating voltage	DC 11...33 V
Sensing element	Pressure diaphragm
Connection, electrical	Screw terminals
Degree of protection	IP54
Dimensions (W x H x D)	186 x 86 x 49
Analog output, signal	DC 4...20 mA
Pressure conneciton	Connecting branch, 6.2 mm dia.

CE-, UL- and CSA-listed.
Supplied complete with PVC connecting tube of 2 m.

Accessories for QBM75../C are identical to those for QBM65...

Range overview QBM75../C

Measuring range, pressure [Pa]	Display	Stock No.	Product No.
-50...50	No	BPZ:QBM75-1U/C	**QBM75-1U/C**
0...100	Yes (digital)	BPZ:QBM75.1-1/C	**QBM75.1-1/C**

6

Accessories for QBM75../C

Product Title	Data sheet	Stock No.	Product No.
Mounting bracket for differenential pressure sensor for air	N1916	BPZ:AQB2000	**AQB2000**
Top hat rail adapter for differential pressure sensor for air	N1910	BPZ:AQB21.2	**AQB21.2**
Air duct probe for simple, quick and airtight mounting	N1589	BPZ:FK-PZ1	**FK-PZ1**
Air duct probe for accurate measurements	N1589	BPZ:FK-PZ2	**FK-PZ2**
Air duct probe for differential pressure sensor, fixed length	N1589	BPZ:FK-PZ3	**FK-PZ3**

Differential pressure monitor

QBM81..

Used as a flow switch or filter monitor in air ducts.

Data sheet	N1552
Digital outputs	1-pin Potential-free Switchover contact
Digital output, switching voltage	DC 24 V / AC 24...250 V
Digital output, switching current	0.01...5 (3) A
Permissible operating pressure	7500 Pa
Connection, electrical	Screw terminals
Degree of protection	IP54
Dimensions (W x H x D)	88 x 110 x 90 mm
Pressure conneciton	Connection branch, 6.2 mm dia.
Ambient temperature, operation	-30...85 °C
Mounting position	Diaphragm vertical, pressure connection pointing downward

Supplied complete with set of 2 air duct connectors (plastic)
and 2 m long PVC tube.

Range overview QBM81..

Measuring range, pressure	Stock No.	Product No.
20...300 Pa	BPZ:QBM81-3	**QBM81-3**
50...500 Pa	BPZ:QBM81-5	**QBM81-5**
100...1000 Pa	BPZ:QBM81-10	**QBM81-10**
500...2000 Pa	S55720-S125	**QBM81-20**
1000...5000 Pa	S55720-S126	**QBM81-50**

Accessories for QBM81..

Product Title	Data sheet	Stock No.	Product No.
Air duct probe for simple, quick and airtight mounting	N1589	BPZ:FK-PZ1	**FK-PZ1**
Air duct probe for accurate measurements	N1589	BPZ:FK-PZ2	**FK-PZ2**
Air duct probe for differential pressure sensor, fixed length	N1589	BPZ:FK-PZ3	**FK-PZ3**

QBE2002-P..

Pressure sensor for liquids and gases (0...10 V)

With threaded connection G½".

Data sheet	N1909
Operating voltage	AC 24 V DC 18...33 V
Connection cable	3-wire
Cable length	1.5 m
Pressure conneciton	External thread G½ "
Analog output, signal	DC 0...10 V
Time constant	<5 ms
Max. permissible pressure	2 x scale end value (FS)
Medium temperature	-40...80 °C
Mounting position	Any
Connection, electrical	Cable
Degree of protection	IP65

Suited for use with oil-containing media.

Range overview QBE2002-P..

Measuring range, pressure	Stock No.	Product No.
0...100 kPa 0...1 bar	BPZ:QBE2002-P1	**QBE2002-P1**
0...200 kPa 0...2 bar	BPZ:QBE2002-P2	**QBE2002-P2**
0...400 kPa 0...4 bar	BPZ:QBE2002-P4	**QBE2002-P4**
0...500 kPa 0...5 bar	BPZ:QBE2002-P5	**QBE2002-P5**
0...1 MPa 0...10 bar	BPZ:QBE2002-P10	**QBE2002-P10**
0...1.6 MPa 0...16 bar	BPZ:QBE2002-P16	**QBE2002-P16**
0...2 MPa 0...20 bar	BPZ:QBE2002-P20	**QBE2002-P20**
0...2.5 MPa 0...25 bar	BPZ:QBE2002-P25	**QBE2002-P25**
0...4 MPa 0...40 bar	BPZ:QBE2002-P40	**QBE2002-P40**
0...6 MPa 0...60 bar	S55720-S185	**QBE2002-P60**

Pressure sensor for liquids and gases (0...20 mA)

QBE2102-P..

With threaded connection G½".

Data sheet	N1909
Operating voltage	DC 11...33 V
Connection cable	2-wire
Cable length	1.5 m
Pressure conneciton	External thread G½ "
Analog output, signal	DC 4...20 mA
Time constant	<5 ms
Max. permissible pressure	2 x scale end value (FS)
Medium temperature	-40...80 °C
Mounting position	Any
Connection, electrical	Cable
Degree of protection	IP65

Suited for use with oil-containing media.

Range overview QBE2102-P..

Measuring range, pressure	Stock No.	Product No.
0...400 kPa 0...4 bar	S55720-S165	**QBE2102-P4**
0...500 kPa 0...5 bar	S55720-S166	**QBE2102-P5**
0...1 MPa 0...10 bar	S55720-S167	**QBE2102-P10**
0...1,6 MPa 0...16 bar	S55720-S168	**QBE2102-P16**
0...2 MPa 0...20 bar	S55720-S169	**QBE2102-P20**

Accessories for QBE2002-P.. and QBE2102-P..

Product Title	Data sheet	Stock No.	Product No.
Mounting bracket for pressure sensor QBE2002	N1909	BPZ:AQB22.1	**AQB22.1**
Connection kit to mount QBE2002-P...	N1909	S55720-S116	**AQB2001**

Pressure sensors for liquids and gases QBE..

QBE61.3-DP..

Differential pressure sensor for liquids and gases

For slightly aggressive liquids and gases, highly resistant to overpressure. Suitable for use with hot water and chilled water.
With threaded connections G½" and wall mounting bracket.

Data sheet	N1923
Operating voltage	AC 24 V DC 18...33 V
Analog output, signal	DC 0...10 V
Sensing element	Pressure diaphragm
Medium temperature	-15...80 °C
Mounting position	Any
Connection, electrical	Screw-free terminals
Pressure conneciton	External thread G ½ "
PN class	PN 40
Degree of protection	IP54
Dimensions (W x H x D)	126 x 135 x 60 mm

Not suitable for use with ammonia or freones.

6

Range overview QBE61.3-DP..

Measuring range, pressure [bar]	Max. permissible pressure [bar]	Stock No.	Product No.
0...2	12	BPZ:QBE61.3-DP2	**QBE61.3-DP2**
0...5	20	BPZ:QBE61.3-DP5	**QBE61.3-DP5**
0...10	20	BPZ:QBE61.3-DP10	**QBE61.3-DP10**

For a smaller measuring range see QBE63-DP..
Note on max. permissible pressure: pressure on one side.

Accessories for QBE61.3-DP..

Product Title	Data sheet	Stock No.	Product No.
Water trap pipe	N1915	BPZ:428616520	**428616520**

QBE63-DP..

Differential pressure sensors for liquids and gase (DC 0...10 V)

For slightly aggressive liquids and gases, highly resistant to overpressure. With threaded connections G1/8"
Supplied complete with mounting bracket.

Data sheet	N1920
Operating voltage	AC 24 V DC 20...30 V
Analog output, signal	DC 0...10 V
Medium temperature	-10...80 °C
Connection, electrical	Screw terminals
Pressure conneciton	Internal thread G 1/8 "
Degree of protection	IP65
Dimension (Ø x L)	65 x 94 mm

Not suitable for use with ammonia or freones.

Range overview QBE63-DP..

Measuring range, pressure [kPa]	Max. permissible pressure [bar]	Stock No.	Product No.
0...10	10	BPZ:QBE63-DP01	**QBE63-DP01**
0...20	10	BPZ:QBE63-DP02	**QBE63-DP02**
0...50	20	BPZ:QBE63-DP05	**QBE63-DP05**
0...100	20	BPZ:QBE63-DP1	**QBE63-DP1**

For wider measuring range, see QBE64-DP4
Note on max. permissible pressure: pressure on one side

Differential pressure sensors for liquids and gase (0...10 V) QBE3000..

For slightly aggressive liquids and gases. With threaded connections G1/8".
Including mounting bracket and 2 screwed fittings for copper pipe, 6 mm dia.

Data sheet	N1922
Operating voltage	AC 24 V DC 18...33 V
Analog output, signal	DC 0...10 V
Medium temperature	-15...80 °C
Connection, electrical	Plug-in connection
Pressure conneciton	Internal thread G 1/8 "
Degree of protection	IP65

Not suitable for use with ammonia or freones.

Range overview QBE3000..

Measuring range, pressure	Max. permissible pressure [bar]	Stock No.	Product No.
0...1 bar 0...100 kPa	25	S55720-S173	**QBE3000-D1**
0...1.6 bar 0...160 kPa	25	S55720-S174	**QBE3000-D1.6**
0...2.5 bar 0...250 kPa	25	S55720-S175	**QBE3000-D2.5**
0...4 bar 0...400 kPa	25	S55720-S176	**QBE3000-D4**
0...6 bar 0...600 kPa	25	S55720-S186	**QBE3000-D6**
0...10 bar 0...1 MPa	50	S55720-S177	**QBE3000-D10**
0...16 bar 0...1.6 MPa	50	S55720-S178	**QBE3000-D16**

Note on max. permissible pressure: pressure on both sides.

QBE3100..

Differential pressure sensors for liquids and gase (4...20 mA)

For slightly aggressive liquids and gases. With threaded connections G1/8".
Including mounting bracket and 2 screwed fittings for copper pipe, 6 mm dia.

Data sheet	N1922
Operating voltage	DC 11...33 V
Analog output, signal	DC 4...20 mA
Medium temperature	-15...80 °C
Connection, electrical	Plug-in connection
Pressure conneciton	Internal thread G 1/8 "
Degree of protection	IP65

Not suitable for use with ammonia or freones.

Range overview QBE3100..

Measuring range, pressure	Max. permissible pressure [bar]	Stock No.	Product No.
0...1 bar 0...100 kPa	25	S55720-S179	**QBE3100-D1**
0...1.6 bar 0...160 kPa	25	S55720-S180	**QBE3100-D1.6**
0...2.5 bar 0...250 kPa	25	S55720-S181	**QBE3100-D2.5**
0...4 bar 0...400 kPa	25	S55720-S182	**QBE3100-D4**
0...6 bar 0...600 kPa	25	S55720-S187	**QBE3100-D6**
0...10 bar 0...1 MPa	50	S55720-S183	**QBE3100-D10**
0...16 bar 0...1,6 MPa	50	S55720-S184	**QBE3100-D16**

Note on max. permissible pressure: pressure on both sides.

Accessories for QBE63-DP.., QBE64-DP4 and QBE3..

Product Title	Data sheet	Stock No.	Product No.
Connection kit to mount QBE63../64.., QBE3..	N1922	S55720-S117	**AQB2002**

Pressure sensor for refrigerants (0...10 V)

QBE2001-P..U

With internally threaded pressure connection UNF7/16-20.

Data sheet	N1907
Operating voltage	AC 24 V DC 16...33 V
Analog output, signal	DC 0...10 V
Connection, electrical	Cable
Connection cable	3-wire
Cable length	1.5 m
Pressure conneciton	Internal thread UNF7/16-20
Time constant	<2 ms
Medium temperature	-40...150 °C
Mounting position	Any
Degree of protection	IP67
Max. permissible pressure	3 x scale end value (FS)

For use with all media, including ammonia.

Range overview QBE2001-P..U

Measuring range, pressure	Stock No.	Product No.
-1...9 bar -100...900 kPa	BPZ:QBE2001-P10U	**QBE2001-P10U**
-1...24 bar -100...2400 kPa	BPZ:QBE2001-P25U	**QBE2001-P25U**
-1...29 bar -100...2900 kPa	BPZ:QBE2001-P30U	**QBE2001-P30U**
-1...59 bar -100...5900 kPa	S55720-S171	**QBE2001-P60U**

Pressure sensors for refrigerants (4...20 mA)

QBE2101-P..U

With internally threaded pressure connection UNF7/16-20.

Data sheet	N1907
Operating voltage	DC 8...33 V
Analog output, signal	DC 4...20 mA
Connection, electrical	Cable
Connection cable	2-wire
Cable length	1.5 m
Pressure conneciton	Internal thread UNF7/16-20
Time constant	<2 ms
Medium temperature	-40...150 °C
Mounting position	Any
Degree of protection	IP67
Max. permissible pressure	3 x scale end value (FS)

Suitable for all media, including ammonia

Range overview QBE2101-P..U

Measuring range, pressure	Stock No.	Product No.
-1...9 bar -100...900 kPa	BPZ:QBE2101-P10U	**QBE2101-P10U**
-1...24 bar -100...2400 kPa	BPZ:QBE2101-P25U	**QBE2101-P25U**
-1...29 bar -100...2900 kPa	BPZ:QBE2101-P30U	**QBE2101-P30U**
-1...59 bar -100...5900 kPa	S55720-S170	**QBE2101-P60U**

Accessories for QBE2001-P..U and QBE2101-P..U

Product Title	Data sheet	Stock No.	Product No.
Connection set, thread ½" for pressure sensor for refrigerant	N1907	BPZ:FT-PZ1	**FT-PZ1**

Flow sensor for liquids in DN 10...25 pipes

QVE2000.0..

For continuous flow measurement and monitoring of liquids such as hot water, heating water, or standard water-glycol mixes in HVAC plants

Data sheet	N1597
Operating voltage	DC 11.5....33 V
Analog outputs	DC 0...10 V
Medium temperature	-40...125 °C
Ambient temperature, operation	-15...85 °C
Degree of protection	IP65
Material	Housing under pressure: Fiberglass-reinforced plastic PA6T / 6I Sensor: ETFE
Connection cable	2 m, with 3 pin plug M12x1

Range overview QVE2000.0..

Nominal size, piping	Connecting thread	Measuring range	Stock No.	Product No.
DN 10	G½ "	1.8...32 l/min	S55720-S189	QVE2000.010
DN 15	G¾ "	3.5...50 l/min	S55720-S190	QVE2000.015
DN 20	G1 "	5.0...85 l/min	S55720-S191	QVE2000.020
Dn 25	G1¼ "	9.0...150 l/min	S55720-S192	QVE2000.025

6

Flow sensor for liquids in DN 10...25 pipes

QVE2100.0..

For continuous flow measurement and monitoring of liquids such as hot water, heating water, or standard water-glycol mixes in HVAC plants

Data sheet	N1597
Operating voltage	DC 18...33 V
Analog outputs	DC 4...20 mA
Medium temperature	-40...125 °C
Ambient temperature, operation	-15...85 °C
Degree of protection	IP65
Material	Housing under pressure: Fiberglass-reinforced plastic PA6T / 6I Sensor: ETFE
Connection cable	2 m, with 3 pin plug M12x1

Range overview QVE2100.0..

Nominal size, piping	Connecting thread	Measuring range	Stock No.	Product No.
DN 10	G½ "	1.8...32 l/min	S55720-S193	QVE2100.010
DN 15	G¾ "	3.5...50 l/min	S55720-S194	QVE2100.015
DN 20	G1 "	5.0...85 l/min	S55720-S195	QVE2100.020
DN 25	G1¼ "	9.0...150 l/min	S55720-S196	QVE2100.025

NEW PRODUCT

QVE3000.0..

Flow sensor for liquids in DN 10...25 pipes

For continuous flow measurement and monitoring of liquids such as hot water, heating water, or standard water-glycol mixes in HVAC plants

Data sheet	N1598
Operating voltage	DC 11.5...33 V
Analog outputs	DC 0...10 V
Medium temperature	-40...125 °C
Ambient temperature, operation	-15...85 °C
Degree of protection	IP65
Material	Housing under pressure: red brass Sensor: ETFE
Connection cable	2 m, with 3 pin plug M12x1

Range overview QVE3000.0..

Nominal size, piping	Connecting thread	Measuring range	Stock No.	Product No.
DN 10	G¾ "	1.8...32 l/min	S55720-S211	QVE3000.010
DN 15	G¾ "	3.5...50 l/min	S55720-S212	QVE3000.015
DN 20	G1 "	5.0...85 l/min	S55720-S213	QVE3000.020
DN 25	G1¼ "	9.0...150 l/min	S55720-S214	QVE3000.025

6

QVE3100.0..

Flow sensor for liquids in DN 10...25 pipes

For continuous flow measurement and monitoring of liquids such as hot water, heating water, or standard water-glycol mixes in HVAC plants

Data sheet	N1598
Operating voltage	DC 18...33 V
Analog outputs	DC 4...20 mA
Medium temperature	-40...125 °C
Ambient temperature, operation	-15...85 °C
Degree of protection	IP65
Material	Housing under pressure: red brass Sensor: ETFE
Connection cable	2 m, with 3 pin plug M12x1

Range overview QVE3100.0..

Nominal size, piping	Connecting thread	Measuring range	Stock No.	Product No.
DN 10	G¾ "	1.8...32 l/min	S55720-S215	QVE3100.010
DN 15	G¾ "	3.5...50 l/min	S55720-S216	QVE3100.015
DN 20	G1 "	5.0...85 l/min	S55720-S217	QVE3100.020
DN 25	G1¼ "	9.0...150 l/min	S55720-S218	QVE3100.025

Flow switch for use in hydraulic systems, PN10, DN32...200 QVE1900

For monitoring operation of systems using liquids or gases.

Data sheet	N1592
Digital outputs	1-pin Potential-free Changeover contact
Digital output, switching voltage	250 VAC
Digital output, switching current	15 (8) A
Nominal size, piping	DN32 - DN200
Connecting thread	R 1 " thread
PN class	PN 10
Medium temperature	-20...120 °C
Ambient temperature, operation	-20...85 °C
Material, valve body	Brass
Connection, electrical	Screw terminals
Degree of protection	IP65
Dimensions (W x H x D)	108 x 70 x 132 mm

Stock No.	Product No.
BPZ:QVE1900	**QVE1900**

Flow switch for use in hydraulic systems, PN25, DN20...200 QVE1901

For monitoring operation of systems using liquids or gases.

Data sheet	N1594
Digital outputs	1-pin Potential-free On / Off
Digital output, switching voltage	230 VAC, 48 VDC
Digital output, switching current	1 A
Nominal size, piping	DN20 - DN200
Connecting thread	G ½ " thread
PN class	PN 25
Medium temperature	-20...110 °C
Ambient temperature, operation	-20...80 °C
Material, valve body	Brass
Connection, electrical	Screw terminals
Degree of protection	IP65
Dimensions (W x H x D)	120 x 38 x 92 mm
Additional info	Maximum switching capacity AC 26 VA, DC 20 W

Stock No.	Product No.
BPZ:QVE1901	**QVE1901**

QVE1902.0..

Flow switch for liquids in piping DN 10...25

For monitoring the flow of liquid medium in HVAC plants

Data sheet	N1596
Digital outputs	1-pin Potential-free reed contact
Digital output, switching voltage	AC 230 V, DC 48 V
Digital output, switching current	1 A
Medium temperature	-20...100 °C
Ambient temperature, operation	0...70 °C
Material, valve body	piping: brass
Degree of protection	IP65
Additional info	Maximum switching capacity AC 26 VA, DC 20 W

Range overview QVE1902.0..

Nominal size, piping	Connecting thread	Qmax	Stock No.	Product No.
DN 10	G⅜ "	20 l/min	S55720-S199	QVE1902.010
DN 15	G½ "	30 l/min	S55720-S200	QVE1902.015
DN 20	G¾ "	80 l/min	S55720-S201	QVE1902.020
DN 25	G1 "	130 l/min	S55720-S202	QVE1902.025

Duct sensor for air velocity

QVM62.1

For measuring air velocities or volumetric flow in air ducts. Suited for primary plant (presetting the volumetric flow).

Data sheet	N1932
Operating voltage	AC / DC 24 V
Analog output, signal	DC 0...10 V DC 4...20 mA
Power consumption	5 VA
Cable length	1 m
Measuring range	0...10 m/s 0...15 m/s 0...5 m/s
Measurement accuracy	At 20 °C, 45 % r.h., 1013 hPa: ±0.65 m/s
Immersion length	30...300 mm
Connection, electrical	Screw terminals
Degree of protection	IP42

Sensor detached, ready wired, including pipe extension for different immersion lengths and mounting flange.

	Stock No.	Product No.
	BPZ:QVM62.1	**QVM62.1**

6

QLS60

Solar sensor

For measuring the solar radiation intensity.

Data sheet	N1943
Operating voltage	AC 24 V DC 18...30 V
Power consumption	2.5 VA
Analog output, signal	DC 0...10 V DC 4...20 mA
Measuring range	0...1000 W/m²
Time constant	≤2 s
Connection, electrical	Screw terminals
Degree of protection	IP65
Dimensions (W x H x D)	51 x 92 x 46 mm

Stock No.	Product No.
BPZ:QLS60	**QLS60**

6

Valves and actuators

Overview and selection guides	Product overviews and application recommendations	7-2
Actuators for globe and pressure independent combi valves	Thermostatic head: RTN..	7-25
	Electromotoric SSA..	7-26
	Electrothermal STA..3	7-29
	Electromotoric STP..3, SFP21.., SFP71.., SSA31.04, SUA21/1, SSP.., SFA21.., SFA71.., SSB.., SSD.., SSY.., SSC.., SQS.., SQD.., SAX.., SBX.., SBV..	7-32
	Electrohydraulic SKB.., SKD.. SKC..	7-52
Globe and pressure independent combi valves	2-port flanged valves PN6...PN40: VVF.., MK..	7-59
	2-port threaded valves PN16/25: VDN.., VEN.., VUN.., ADN.., AEN.. VVP.., VVI.., MVI421.., VVG..	7-91
	Threaded fittings for valves ALG.., ALS..	7-116
	3-port flanged valves PN6..PN40: VXF.., MXF461.., M3P..FY	7-118
	3-port threaded valves 3-port threaded valves with bypass PN16: VXP.., VMP.., VXI.., MXI421.., VXG..	7-138
	2-port and 3-port Threaded valves with magnetic actuators PN16: MXG461.., MXG461B.., MXG461S.., MXG462S..	7-155
	Mini Combi Valve (MCV) PN10: VPD.. / VPE..	7-162
	Combi valves PN25 : VPP46.., VPI46.., VPI45..	7-165
Actuators for rotary valves	Rotary actuators for ball valves with or without spring return 2..35Nm: GQD..9A, GDB..9E, GMA..9E , GLB..9E, GBB..1E , GIB..1E	7-171
	Rotary actuators for butterfly and slipper valve SAL.., SQK.., SQL.., SQL..B.., SQL36..	7-177
Rotary valves	2-port ball valves with flange PN40: VAF51..	7-182
	2-port / 3-port ball valves PN40: VAI61.., VBI61	7-183
	3-port / 4-port slipper valves PN6/PN10: VBF21.., VBG31.., VBI31.., VCI31	7-188
	Butterfly valves PN6, PN10, PN16: VKF41.., VKF42.., VKF46..	7-193
Refrigerant valves	For expansion, hotgas and suction throttle applications: MVL661.., MVS661..N	7-199
	2-port modulating pilot valve: M2FP..	7-201
	For refrigeration units and heat recovery: M3FB..LX..	7-202
	For condensate control: M3FK.. LX..	7-203

Elite line

Typical applications	Actuators	Data sheet				5.5 mm	
– Terminal units – Induction units – Chilled ceilings	SSB..	N4891				200 N	200 N
	Operating voltage	Positioning signal	Positioning time [s]	Auxiliary switch			
	AC 230 V	3-position	150	–	✓	SSB31	SSB31.1
	AC 24 V	3-position	150	–	✓	SSB81	SSB81.1
	AC/DC 24 V	0...10 V	75	–	–	SSB61	–

PN 16 Data sheet	1...110 °C N4845	DN	G [inch]	k_{vs} [m3/h]	Δp_s [kPa]	Δp_{max} [kPa]
	VVP45.10-..	10	G ½B	0.25 / 0.4 / 0.63	725	400
	VVP45.10-..	10	G ½B	1 / 1.6	725	400
	VVP45.15-..	15	G ¾B	2.5	350	350
	VVP45.20-..	20	G 1B	4	350	350
	VVP45.25-..	25	G 1¼B	6.3	300	300
	VXP45.10-..	10	G ½B	0.25 / 0.4 / 0.63	–	400
	VXP45.10-..	10	G ½B	1 / 1.6	–	400
	VXP45.15-..	15	G ¾B	2.5	–	350
	VXP45.20-..	20	G 1B	4	–	350
	VXP45.25-..	25	G 1¼B	6.3	–	300
	VMP45.10-..	10	G ½B	0.25 / 0.4	–	400
	VMP45.10-..	10	G ½B	0.63 / 1	–	400
	VMP45.10-..	10	G ½B	1.6	–	400
	VMP45.15-..	15	G ¾B	2.5	–	350
	VMP45.20-..	20	G 1B	4	–	350

Standard line

Typical applications	Actuators	Data sheet	Actuators	Data sheet	4.5 mm	2.5 mm	
– Terminal units – Induction units – Chilled ceilings	STP23/73/63 SFP..	N4884 N4865	SSP..	N4864	100 N	135 N	160 N
	Operating voltage	Positioning signal	Positioning time [s]				
	AC 230 V	2-position	210		STP23	–	–
		2-position	10		–	SFP21/18	–
		3-position	150		–	–	SSP31
	AC 24 V	2-position	10		–	SFP71/18	–
		3-position	43		–	–	SSP81.04
		3-position	150		–	–	SSP81
		0...10 V	30		STP63	–	–
	AC/DC 24 V	2-position/PDM	270		STP73	–	–
		2-position/PDM	180		–	–	–
		0...10 V	34		–	–	SSP61

PN 16 Data sheet	1...110 °C N4847	DN	G [inch]	k_{vs} [m3/h]	Δp_s [kPa]	Δp_{max} [kPa]	Δp_s [kPa]	Δp_{max} [kPa]
	VVP47.10-..	10	G ½B	0.25 / 0.4	700	400	1000	400
	VVP47.10-..	10	G ½B	0.63 / 1	250	250	500	400
	VVP47.10-..	10	G ½B	1.6	150	150	300	300
	VVP47.15-..	15	G ¾B	2.5	150	150	300	300
	VVP47.20-..	20	G 1B	4	100	100	175	175
	VXP47.10-..	10	G ½B	0.25 / 0.4	–	400	–	400
	VXP47.10-..	10	G ½B	0.63 / 1	–	250	–	400
	VXP47.10-..	10	G ½B	1.6	–	150	–	300
	VXP47.15-..	15	G ¾B	2.5	–	150	–	300
	VXP47.20-..	20	G 1B	4	–	100	–	175
	VMP47.10-..	10	G ½B	0.25 / 0.4	–	400	–	400
	VMP47.10-..	10	G ½B	0.63 / 1	–	250	–	400
	VMP47.10-..	10	G ½B	1.6	–	150	–	300
	VMP47.15-..	15	G ¾B	2.5	–	150	–	300

Union nuts for threaded valves	See page 7-11

VVP47..S, VMP47..S for Conex® compression fittings, k_{vs} = 0.63 / 1 / 1.6 / 2.5 m³/h
VVP47..S, VMP47..S for Conex® compression fittings, k_{vs} = 0.63 / 1 / 1.6 / 2.5 m³/h
.. = k_{vs} value

TRV line

Typical applications	Actuators	Data sheet					
– Radiators	RTN..	N2111					
					RTN51/RTN51G	RTN71	RTN81

Typical applications	Actuators	Data sheet	Actuators	Data sheet	4.5 mm	2.5 mm	4.5 mm
– Radiators	STA23/73/63 SSA..	N4884 N4893			100 N	100 N	90 N
	Operating voltage	Positioning signal	Positioning time [s]				
	AC 230 V	2-position	210		STA23	–	STA23HD
		3-position	150		–	SSA31	–
	AC 24 V	3-position	150		–	SSA81	–
		0...10 V	30		STA63	–	–
	AC/DC 24 V	2-position/PDM	270		STA73	–	STA73HD
		2-position/PDM	180		–	–	–
		0...10 V	34		–	SSA61	–
	Normally open/normally closed (for radiator valves)				NC	–	–

PN 10 1...120 °C	DIN	NF	DN	Rp/R [inch]	k_v [m³/h]	Δp_{max} [kPa]
Data sheet	N2105	N2106				
	VDN110	VDN210	10	Rp/R ⅜	0.09...0.63	60
	VDN115	VDN215	15	Rp/R ½	0.10...0.89	60
	VDN120	VDN220	20	Rp/R ¾	0.31...1.41	60
	VEN110	VEN210	10	Rp/R ⅜	0.09...0.63	60
	VEN115	VEN215	15	Rp/R ½	0.10...0.89	60
	VEN120	VEN220	20	Rp/R ¾	0.31...1.41	60
	–	VUN210	10	Rp/R ⅜	0.14...0.60	60
	–	VUN215	15	Rp/R ½	0.13...0.77	60

PN 10 1...110 °C		DN	Rp/R [inch]	k_v [l/h]	Δp_{max} [kPa]
Data sheet	N2103				
	VD115CLC	15	Rp/R ½	0.25...1.9	150
	VD120CLC	20	Rp/R ¾	0.25...2.6	150
	VD125CLC	25	Rp/R 1	0.25...2.6	150

Floor heating systems	
Miscellaneous products	✓

Presettings for radiator valves

VEN.., VDN.., VUN..

k_v values [m³/h] at the different preadjusted positions

Control range with electromotoric and electrothermic actuators SSA.., STA.., SSA955	■	■	■	■	■	■	–	
Control range with thermostatic head RTN..	■	■	■	■	■	–	■	
Reference numbers for preadjustment	1	2	3	4	5	N	N	
VDN110/VDN210/VEN110/VEN210	0.09	0.18	0.26	0.33	0.48	0.63	0.43	m³/h
VDN115/VDN215/VEN115/VEN215	0.1	0.2	0.31	0.45	0.69	0.89	0.52	m³/h
VDN120/VDN220/VEN120/VEN220	0.31	0.41	0.54	0.83	0.91	1.41	0.71	m³/h
VUN210	0.14	0.28	0.38	0.49	0.53	0.6	0.43	m³/h
VUN215	0.13	0.23	0.34	0.52	0.66	0.77	0.5	m³/h

[1] k_v value at a P-band of 2 K

Notes

- k_v = nominal flow rate of cold water (5...30 °C) through the valve at the respective stroke and a differential pressure of 100 kPa (1 bar)
- The selected k_v values of the radiator valves can be easily and precisely set on the valve head in 5 steps + N (fully open)

On/Off line

Typical applications	Actuators	Data sheet	Actuators	Data sheet	2,5 mm		4,5 mm	2,5 mm
– Terminal units – Domestic hot water storage tank charging – Zone control	SFA..	N4863			200 N	150 N	100 N	160 N
	SUA21/1	N4830		N4880				
	STA23/73/63	N4884	SSA31.04 [1]	N4860				
	Operating voltage	**Positioning signal**	**Positioning time [s]**					
	AC 230 V	2-position	210		SFA21/18	–	–	–
		2-position	180		–	–	STA23	–
		2-position/SPST [2]	10		–	SUA21/1	–	–
		3-position/SPDT [2]	43		–	–	–	SSA31.04
	AC 24 V	2-position	10		SFA71/18	–	–	–
		0...10 V	30		–	–	STA63	–
	AC/DC 24 V	2-position/PDM	270		–	–	STA73	–
		2-position/PDM	180		–	–	–	–

PN 16	1...110 °C	DN	Rp [Inch]	k_{vs} [m³/h]	Δp_s [kPa]	Δp_{max} [kPa]	Δp_s [kPa]	Δp_{max} [kPa]	Δp_s [kPa]	Δp_{max} [kPa]
Data sheet	N4842									
	VVI46.15	15	Rp ½	2	300	300	300	300	200	200
	VVI46.20	20	Rp ¾	3,5	300	300	300	300	200	200
	VVI46.25	25	Rp 1	5	300	300	250	250	200	200
	VXI46.15 [3]	15	Rp ½	2	–	300	–	300	–	200
	VXI46.20 [3]	20	Rp ¾	3,5	–	300	–	300	–	200
	VXI46.25 [3]	25	Rp 1	5	–	300	–	300	–	200
	VXI46.25T [4]	25	Rp 1	5	–	200	–	200	–	200

[1] Not suited for radiator valves; [2] SPST = single-pole single-throw, SPDT = single-pole double-throw; [3] 70% k_{vs} in bypass, leakage rate in bypass 2...5% of k_{vs} value; [4] 100% k_{vs} in bypass, leakage rate in bypass 0.05% of k_{vs} value. **For noiseless operation, the value of 100 kPa should not be exceeded.**

7

Thermal actuators and connecting cables

Color		White						Black		
Equipped with		–	Functional module DC 0...10 V		Auxiliary switch for STA	Auxiliary switch for STP	LED	–	Functional module DC 0...10 V	
Positioning signal		2-position (ON/OFF)	DC 0...10 V	DC 0...10 V	2-position (ON/OFF)	2-position (ON/OFF)	2-position (ON/OFF)	2-position (ON/OFF)	DC 0...10 V	DC 0...10 V
		[STA.., NC]	[STA.., NC]	–	[STA.., NC]	–	[STA.., NC]	[STA.., NC]	[STA.., NC]	–
		[STP.., NO]	–	[STP.., NO]	–	[STP.., NO]	[STP.., NO]	[STP.., NO]	–	[STP.., NO]
Standard PVC cables	0.8 m	ASY23L08								
	1 m	ASY23L10			ASA23U10	ASP23U10				
	2 m	ASY23L20	ASY6AL20	ASY6PL20	ASA23U20	ASP23U20	ASY23L20LD		ASY6AL20B	ASY6PL20B
	3 m	ASY23L30						ASY23L30B		
	4 m	ASY23L40								
	5 m	ASY23L50	ASY6AL50	ASY6PL50			ASY23L50LD	ASY23L50B	ASY6AL50B	
	6 m	ASY23L60								
	7 m	ASY23L70	ASY6AL70	ASY6PL70					ASY6AL70B	
	10 m	ASY23L100						ASY23L100B		
	15 m	ASY23L150								
Halogen-free cables	2 m	ASY23L20HF	ASY6AL20HF	ASY6PL20HF						
	5 m	ASY23L50HF	ASY6AL50HF	ASY6PL50HF						
	7 m		ASY6AL70HF	ASY6PL70HF						
	10 m	ASY23L100HF								
Actuators										
STA73/00		■	■		■		■			
STA23/00		■			■					
STP73/00		■		■		■	■			
STP23/00		■				■				
STA73PR/00[1]		■			■		■			
STP73PR/00[1]		■				■	■			
STA73MP/00[2]		■	■		■		■			
STA23MP/00[2]		■			■					
STA73B/00								■	■	
STA23B/00								■		
STP73B/00								■		■
STP23B/00								■		

1) Actuators ideal for parallel running. Pulse duration modulation (PDM) in connection with Siemens room controllers of the Desigo™ range and room thermostats.
2) Multipack with 50 actuators (OEM) NC: normally closed, NO: normally open

Combi valves with actuators

Typical applications	Actuators	Data sheet				4,5 mm	2,5 mm
– Radiators	RTN.. STA23/73/63 SSA..	N2111 N4884 N4893				100 N	100 N
	Operating voltage	Positioning signal	Positioning time [s]	Spring return function			
	AC 230 V	2-position	210	✓	–	STA23	–
		3-position	150	–	–	–	SSA31
	AC 24 V	3-position	150	–	–	–	SSA81
		0...10 V	30	✓	–	STA63	–
	AC/DC 24 V	2-position/PDM	270	✓	–	STA73	–
		2-position/PDM	180	✓	–	–	–
		0...10 V	34	–	–	–	SSA61
					RTN51	–	–
					RTN71	–	–
					RTN81	–	–

PN 10 1...90 °C	DIN	DN	Rp/R	V	V_{nom} [1]			Δp_{min}			Δp_{max}
Data sheet	N2185		[inch]	[l/h]	[l/h]			[kPa]			[kPa]
	VPD110A-..[1]	10	Rp/R ⅜	25...318	45	90	145	6 [2]	8 [2]	10 [2]	60
	VPD115A-..[1]	15	Rp/R ½	25...318	45	90	145	6 [2]	8 [2]	10 [2]	60
	VPD110B-200	10	Rp/R ⅜	95...483	200			20			60
	VPD115B-200	15	Rp/R ½	95...483	200			20			60
	VPE110A-..[1]	10	Rp/R ⅜	25...318	45	90	145	6 [2]	8 [2]	10 [2]	60
	VPE115A-..[1]	15	Rp/R ½	25...318	45	90	145	6 [2]	8 [2]	10 [2]	60
	VPE110B-200	10	Rp/R ⅜	95...483	200			20			60
	VPE115B-200	15	Rp/R ½	95...483	200			20			60

Typical applications	Actuators	Data sheet		Spring return function	4.5 mm	2,5 mm		2.5 / 5 mm
– Terminal units – Air handling units – Chilled ceilings	SSA.. STA.. SFA.. SUA..	N4893 N4884 N4863 N4830			100 N	150 N	200 N	100 N
	Operating voltage	Positioning signal	Positioning time [s]					
	AC 230 V	3-position	150	–	–	–	–	SSA31
		2-position	210	✓	STA23	–	–	–
		2-position	10	✓	–	–	SFA21/18	–
		2-position/SPST [3]	10	–	–	SUA21/1	–	–
	AC 24 V	2-position	10	✓		–	SFA71/18	–
		0...10 V	30	✓	STA63	–	–	–
	AC/DC 24 V	3-position	150	–	–	–	–	SSA81
		2-position/PDM	270	✓	STA73	–	–	–
		2-position/PDM	180	✓	–	–	–	–
		0...10 V	75	–	–	–	–	SSA61

PN 25 1...110 °C	Without pressure testing points	With pressure testing points	DN	G [inch]	V_{min} [l/h]	V_{100} [l/h]	Δp_{min} [kPa]	Δp_{max} [kPa]	Δp_{min} [kPa]	Δp_{max} [kPa]
Data sheet	N4855									
	VPP46.10L0.2	VPP46.10L0.2Q	10	½	30	200	15	400	15	400
	VPP46.15L0.2	VPP46.15L0.2Q	15	¾	30	200	15	400	15	400
	VPP46.15L0.6	VPP46.15L0.6Q	15	¾	100	575	15	400	15	400
	VPP46.20F1.4	VPP46.20F1.4Q	20	1	220	1330	–	–	20	400

PN 25 1...110 °C	Without pressure testing points	With pressure testing points	DN	G [inch]	V_{min} [l/h]	V_{100} [l/h]	Δp_{min} [kPa]	Δp_{max} [kPa]	Δp_{min} [kPa]	Δp_{max} [kPa]
Data sheet	N4855									
	VPI46.15L0.2	VPI46.15L0.2Q	15	½	30	200	15	400	15	400
	VPI46.15L0.6	VPI46.15L0.6Q	15	½	100	575	15	400	15	400
	VPI46.20F1.4	VPI46.20F1.4Q	20	¾	220	1330	–	–	20	400

[1] .. = insert V_{nom}
V_{nom} = factory setting = volumetric flow at 0.5 mm stroke or setting mark 3 of the presetting
[2] Δp_{min} is valid for V_{nom} 45/90/145 l/h
[3] SPST = single-pole single-throw

Typical applications	Actuators	Data sheet					5.5 mm	6.5 mm
– Terminal units – Air handling units – Chilled ceilings	SSD.. SQD..	N4861 N4540					250 N	400 N
	Operating voltage	Positioning signal	Positioning time [s]		Spring return function			
			SSD..	SQD..	SSD..	SQD..		
	AC 230 V	3-position	150	170	–	–	**SSD31**	**SQD35.00**
	AC 24 V	3-position	150	43	–	–	**SSD81**	**SQD85.03**
		0...10 V	–	43	–	–	**–**	**SQD65**
	AC/DC 24 V	0...10 V	75	–	–	–	**SSD61**	**–**
		0...10 V	75	–	–	–	**SSD61EP** [1]	**–**
		2...10 V	75	–	–	–	**SSD61.2**	**–**

PN 25 1...120 °C	Without pressure testing points	With pressure testing points	DN	Rp [inch]	V_{min} [l/h]	V_{100} [l/h]	Δp_{min} [kPa]	Δp_{max} [kPa]	Δp_{min} [kPa]	Δp_{max} [kPa]
Data sheet	N4853									
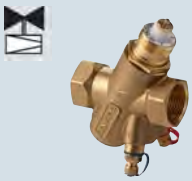	**VPI45.15F0.5**	**VPI45.15F0.5Q**	15	Rp ½	90	620	16	400	–	–
	VPI45.15F1.5	**VPI45.15F1.5Q**	15	Rp ½	290	1730	18	400	–	–
	VPI45.20F0.9	**VPI45.20F0.9Q**	20	Rp ¾	160	1050	16	400	–	–
	VPI45.20F2	**VPI45.20F2Q**	20	Rp ¾	350	2040	22	400	–	–
	VPI45.25F1.5	**VPI45.25F1.5Q**	25	Rp 1	280	1720	16	400	–	–
	VPI45.25F2	**VPI45.25F2Q**	25	Rp 1	350	2040	22	400	–	–
	VPI45.32F3	**VPI45.32F3Q**	32	Rp 1¼	560	3050	18	400	–	–
	VPI45.40F7	**VPI45.40F7Q**	40	Rp 1½	2355	7105	–	–	26	400
	VPI45.50F8.5	**VPI45.50F8.5Q**	50	Rp 2	2664	8586	–	–	32	400

[1] For equal-percentage valve characteristic

7

Flanged 2-port and 3-port valves with 20/40 mm actuators

Typical applications	Actuators	Data sheet				Spring return function	20 mm			40 mm
– Heating plants – Ventilation and air conditioning plants – Heat and cooling generation – Heat and cooling distribution	SAX.. SKD.. SKB.. SKC..	N4501 N4561 N4564 N4566					800 N	1000 N	2800 N	2800 N
	Operating voltage	Positioning signal	Positioning time [s]							
			SAX	SKD	SKB/SKC					
	AC 230 V	3-position	120	120	120	–	**SAX31.00**	**SKD32.50**	**SKB32.50**	**SKC32.60**
		3-position	–	120	120	✓	**–**	**SKD32.51**	**SKB32.51**	**SKC32.61**
		3-position	30	–	–	–	**SAX31.03**	**–**	**–**	**–**
		3-position	–	30	–	✓	**–**	**SKD32.21**	**–**	**–**
	AC 24 V [1]	3-position	120	120	120	–	**SAX81.00**	**SKD82.50**	**SKB82.50**	**SKC82.60**
		3-position	–	120	120	✓	**–**	**SKD82.51**	**SKB82.51**	**SKC82.61**
		3-position	30	–	–	–	**SAX81.03**	**–**	**–**	**–**
		0...10 V, 4...20 mA	–	30	120	–	**–**	**SKD60**	**SKB60**	**SKC60**
		0...10 V, 4...20 mA	–	30	120	✓	**–**	**SKD62**	**SKB62**	**SKC62**
	AC/DC 24 V	0...10 V, 4...20 mA	30	–	–	–	**SAX61.03**	**–**	**–**	**–**

PN 6	-10...150 °C			DN	k_{vs} [m³/h]	Δp_s [kPa]	Δp_{max} [kPa]	Δp_s [kPa]	Δp_{max} [kPa]	Δp_s [kPa]	Δp_{max} [kPa]	Δp_s [kPa]	Δp_{max} [kPa]
Data sheet	N4310		N4410										
	VVF21.22..25 [2]		**VXF21.22..25** [2]	25	1.9/3/5/7.5	600	300	600	300	600	300	–	–
	VVF21.25-.. [3]		**VXF21.25-..** [3]	25	2.5/4/6.3/10	600	300	600	300	600	300	–	–
	VVF21.39..40 [2]		**VXF21.39..40** [2]	40	12/19	500	300	600	300	600	300	–	–
	VVF21.40-..		**VXF21.40-..**	40	16/25	500	300	600	300	600	300	–	–
	VVF21.50		**VXF21.50**	50	31	300	300	450	300	600	300	–	–
	VVF21.50-40		**VXF21.50-40**	50	40	300	300	450	300	600	300	–	–
	VVF21.65		**VXF21.65**	65	49	175	175	275	275	600	300	–	–
	VVF21.65-63		**VXF21.65-63**	65	63	175	175	275	275	600	300	–	–
	VVF21.80		**VXF21.80**	80	78	100	100	175	175	500	300	–	–
	VVF21.80-100		**VXF21.80-100**	80	100	100	100	175	175	500	300	–	–
	VVF21.90		**VXF21.90**	100	124	–	–	–	–	–	–	300	200
	VVF21.100-160		**VXF21.100-160**	100	160	–	–	–	–	–	–	300	200

Flanged 2-port and 3-port valves with 20/40 mm actuators

Typical applications	Actuators	Data sheet
– Heating plants – Ventilation and air conditioning plants – Heat and cooling generation – Heat and cooling distribution	SAX..	N4501
	SKD..	N4561
	SKB..	N4564
	SKC..	N4566

Operating voltage	Positioning signal	Positioning time [s] SAX	SKD	SKB/SKC	Spring return function	20 mm 800 N	20 mm 1000 N	20 mm 2800 N	40 mm 2800 N
AC 230 V	3-position	120	120	120	–	SAX31.00	SKD32.50	SKB32.50	SKC32.60
	3-position	–	120	120	✓	–	SKD32.51	SKB32.51	SKC32.61
	3-position	30	–	–	–	SAX31.03	–	–	–
	3-position	–	30	–	✓	–	SKD32.21	–	–
AC 24 V [1]	3-position	120	120	120	–	SAX81.00	SKD82.50	SKB82.50	SKC82.60
	3-position	–	120	120	✓	–	SKD82.51	SKB82.51	SKC82.61
	3-position	30	–	–	–	SAX81.03	–	–	–
	0...10 V, 4...20 mA	–	30	120	–	–	SKD60	SKB60	SKC60
	0...10 V, 4...20 mA	–	30	120	✓	–	SKD62	SKB62	SKC62
AC/DC 24 V	0...10 V, 4...20 mA	30	–	–	–	SAX61.03	–	–	–

PN 10	-10...150 °C		DN	k_{vs} [m³/h]	Δp_s [kPa]	Δp_{max} [kPa]	Δp_s [kPa]	Δp_{max} [kPa]	Δp_s [kPa]	Δp_{max} [kPa]	Δp_s [kPa]	Δp_{max} [kPa]
Data sheet	N4320	N4420										
	VVF31.15-.. [3]	VXF31.15-.. [3]	15	2.5/4	1000	300	1000	300	1000	300	–	–
	VVF31.24..25 [2]	VXF31.24..25 [2]	25	5/7.5	1000	300	1000	300	1000	300	–	–
	VVF31.25-..	VXF31.25-..	25	6.3/10	1000	300	1000	300	1000	300	–	–
	VVF31.39..40 [2]	VXF31.39..40 [2]	40	12/19	525	300	775	300	1000	300	–	–
	VVF31.40-..	VXF31.40-..	40	16/25	525	300	775	300	1000	300	–	–
	VVF31.50	VXF31.50	50	31	325	300	475	300	1000	300	–	–
	VVF31.50-40	VXF31.50-40	50	40	325	300	475	300	1000	300	–	–
	VVF31.65	VXF31.65	65	49	175	175	275	275	750	300	–	–
	VVF31.65-63	VXF31.65-63	65	63	175	175	275	275	750	300	–	–
	VVF31.80	VXF31.80	80	78	100	100	175	175	500	300	–	–
	VVF31.80-100	VXF31.80-100	80	100	100	100	175	175	500	300	–	–
	VVF31.90	VXF31.90	100	124	–	–	–	–	–	–	300	200
	VVF31.100-160	VXF31.100-160	100	160	–	–	–	–	–	–	300	200
	VVF31.91	VXF31.91	125	200	–	–	–	–	–	–	200	150
	VVF31.125-250	VXF31.125-250	125	250	–	–	–	–	–	–	200	150
	VVF31.92	VXF31.92	150	300	–	–	–	–	–	–	125	100
	VVF31.150-315	VXF31.150-315	150	315	–	–	–	–	–	–	125	100

PN 16	-10...150 °C		DN	k_{vs} [m³/h]	Δp_s [kPa]	Δp_{max} [kPa]	Δp_s [kPa]	Δp_{max} [kPa]	Δp_s [kPa]	Δp_{max} [kPa]	Δp_s [kPa]	Δp_{max} [kPa]
Data sheet	N4330	N4430										
	VVF40.15-.. [3]	VXF40.15-.. [3]	15	1.9/2.5/3/4	1600	300	1600	300	1600	300	–	–
	VVF40.25-..	VXF40.25-..	25	5/6.3/7.5/10	1550	300	1600	300	1600	300	–	–
	VVF40.40-..	VXF40.40-..	40	12/16/19/25	525	300	775	300	1600	300	–	–
	VVF40.50-..	VXF40.50-..	50	31/40	325	300	475	300	1300	300	–	–
	VVF40.65-..	VXF40.65-..	65	49/63	175	175	275	275	750	300	–	–
	VVF40.80-..	VXF40.80-..	80	78/100	100	100	175	175	500	300	–	–
	VVF40.100-..	VXF40.100-..	100	124/160	–	–	–	–	–	–	300	200
	VVF40.125-..	VXF40.125-..	125	200/250	–	–	–	–	–	–	200	150
	VVF40.150-..	VXF40.150-..	150	300/315	–	–	–	–	–	–	125	100

PN 16	-20...220 °C		DN	k_{vs} [m³/h]	Δp_s [kPa]	Δp_{max} [kPa]	Δp_s [kPa]	Δp_{max} [kPa]	Δp_s [kPa]	Δp_{max} [kPa]	Δp_s [kPa]	Δp_{max} [kPa]
Data sheet	N4404	N4404										
	VVF43.65-50	–	65	50	–	–	–	–	–	–	700	650
	VVF43.65-63	VXF43.65-63	65	63	–	–	–	–	–	–	700	650
	VVF43.80-80	–	80	80	–	–	–	–	–	–	450	400
	VVF43.80-100	VXF43.80-100	80	100	–	–	–	–	–	–	450	400
	VVF43.100-125	–	100	125	–	–	–	–	–	–	300	250
	VVF43.100-160	VXF43.100-160	100	160	–	–	–	–	–	–	300	250
	VVF43.125-200	–	125	200	–	–	–	–	–	–	175	160
	VVF43.125-250	VXF43.125-250	125	250	–	–	–	–	–	–	175	160
	VVF43.150-315	–	150	315	–	–	–	–	–	–	125	100
	VVF43.150-400	VXF43.150-400	150	400	–	–	–	–	–	–	125	100
	VVF43.65-63K	–	65	63	–	–	–	–	–	–	1600	800
	VVF43.80-100K	–	80	100	–	–	–	–	–	–	1600	800
	VVF43.100-160K	–	100	160	–	–	–	–	–	–	1600	800
	VVF43.125-250K	–	125	250	–	–	–	–	–	–	1600	800
	VVF43.150-360K	–	150	360	–	–	–	–	–	–	1600	800

[1] SAX81..: AC/DC 24 V
[2] For 22...25, 24...25, 39...40 = insert number in place of k_{vs} value
[3] .. = insert k_{vs} value
VVF43.., VXF43..: For DN 15...50 and k_{vs} value ≤ 40 m³/h see V..F53..

7

Flanged 2-port and 3-port valves with 20/40 mm actuators

Typical applications	Actuators	Data sheet
– Heating plants – Ventilation and air conditioning plants – Heat and cooling generation – Heat and cooling distribution	SAX..	N4501
	SKD..	N4561
	SKB..	N4564
	SKC..	N4566

Operating voltage	Positioning signal	Positioning time [s] SAX	SKD	SKB/SKC	Spring return function	20 mm 800 N	1000 N	2800 N	40 mm 2800 N
AC 230 V	3-position	120	120	120	–	**SAX31.00**	**SKD32.50**	**SKB32.50**	**SKC32.60**
	3-position	–	120	120	✓	**–**	**SKD32.51**	**SKB32.51**	**SKC32.61**
	3-position	30	–	–	–	**SAX31.03**	**–**	**–**	**–**
	3-position	–	30	–	✓	**–**	**SKD32.21**	**–**	**–**
AC 24 V [1]	3-position	120	120	120	–	**SAX81.00**	**SKD82.50**	**SKB82.50**	**SKC82.60**
	3-position	–	120	120	✓	**–**	**SKD82.51**	**SKB82.51**	**SKC82.61**
	3-position	30	–	–	–	**SAX81.03**	**–**	**–**	**–**
	0...10 V, 4...20 mA	–	30	120	–	**–**	**SKD60**	**SKB60**	**SKC60**
	0...10 V, 4...20 mA	–	30	120	✓	**–**	**SKD62**	**SKB62**	**SKC62**
AC/DC 24 V	0...10 V, 4...20 mA	30	–	–	–	**SAX61.03**	**–**	**–**	**–**

PN 25	-20...220 °C		DN	k_{vs} [m³/h]	Δp_s [kPa]	Δp_{max} [kPa]	Δp_s [kPa]	Δp_{max} [kPa]	Δp_s [kPa]	Δp_{max} [kPa]	Δp_s [kPa]	Δp_{max} [kPa]
Data sheet	N4405	N4405										
VVF53.15-.. [2]	–	15	0.16 / 0.2 / 0.25	2500	1200	2500	1200	2500	1200	–	–
VVF53.15-..	–	15	0.32 / 0.4 / 0.5 / 0.63	2500	1200	2500	1200	2500	1200	–	–
VVF53.15-..	–	15	0.8 / 1 / 1.25 / 2 / 3.2	2500	1200	2500	1200	2500	1200	–	–
VVF53.15-..	**VXF53.15-..** [2]	15	1.6 / 2.5 / 4	2500	1200	2500	1200	2500	1200	–	–
VVF53.20-6.3	**VXF53.20-6.3**	20	6.3	2500	1200	2500	1200	2500	1200	–	–
VVF53.25-..	–	25	5 / 8	1600	1200	2100	1200	2500	1200	–	–
VVF53.25-..	**VXF53.25-..**	25	6.3 / 10	1600	1200	2100	1200	2500	1200	–	–
VVF53.32-16	**VXF53.32-16**	32	16	900	750	1200	1100	2500	1200	–	–
VVF53.40-..	–	40	12.5 / 20	550	500	750	650	2000	1200	–	–
VVF53.40-..	**VXF53.40-..**	40	16 / 25	550	500	750	650	2000	1200	–	–
VVF53.50-31.5	–	50	31.5	350	300	450	400	1200	1150	–	–
VVF53.50-40	**VXF53.50-40**	50	40	350	300	450	400	1200	1150	–	–
VVF53.65-63	**VXF53.65-63**	65	63	–	–	–	–	–	–	700	650
VVF53.80-100	**VXF53.80-100**	80	100	–	–	–	–	–	–	450	400
VVF53.100-160	**VXF53.100-160**	100	160	–	–	–	–	–	–	300	250
VVF53.125-250	**VXF53.125-250**	125	250	–	–	–	–	–	–	175	160
VVF53.150-400	**VXF53.150-400**	150	400	–	–	–	–	–	–	125	100
VVF53.50-40K	–	50	40	2500	1200	2500	1200	2500	1200	–	–
VVF53.65-63K	–	65	63	–	–	–	–	–	–	2500	1200
VVF53.80-100K	–	80	100	–	–	–	–	–	–	2500	1200
VVF53.100-160K	–	100	160	–	–	–	–	–	–	2500	1200
VVF53.125-250K	–	125	250	–	–	–	–	–	–	2500	1200
VVF53.150-360K	–	250	360	–	–	–	–	–	–	2500	1200

PN 40	-25...220 °C (350 °C)	DN	k_{vs} [m³/h]	Δp_s [kPa]	Δp_{max} [kPa]	Δp_s [kPa]	Δp_{max} [kPa]	Δp_s [kPa]	Δp_{max} [kPa]	Δp_s [kPa]	Δp_{max} [kPa]
Data sheet	N4382	N4482									
VVF61.09..11 [3]	–	15	0.19 / 0.3 / 0.45	–	–	4000	1600	4000	1600	–	–
VVF61.12..13 [3]	–	15	0.7 / 1.2	–	–	4000	1600	4000	1600	–	–
VVF61.14..15 [3]	**VXF61.14..15** [3]	15	1.9 / 3	–	–	4000 –	1600 1200	4000 –	1600 1600	–	–
VVF61.23..25 [3]	**VXF61.24..25** [3]	25	3 / 5 / 7.5 5 / 7.5	–	–	2250 –	1600 1200	4000 –	1600 1600		
VVF61.39..40 [3]	**VXF61.39..40** [3]	40	12 / 19	–	–	–	–	4000 –	1600 1200	–	–
VVF61.49..50 [3]	**VXF61.49..50** [3]	50	19 / 31	–	–	–	–	4000 –	1600 1000	–	–
VVF61.65	**VXF61.65**	65	49	–	–	–	–	–	–	4000 –	1000 800
VVF61.80	**VXF61.80**	80	78	–	–	–	–	–	–	4000 –	700 500
VVF61.90	**VXF61.90**	100	124	–	–	–	–	–	–	4000 –	450 300
VVF61.91	**VXF61.91**	125	200	–	–	–	–	–	–	4000 –	300 200
VVF61.92	**VXF61.92**	150	300	–	–	–	–	–	–	4000 –	200 125

[1] SAX81..: AC/DC 24 V
[2] .. = insert k_{vs} value
[3] For 09...15, 14...15, 23...25, 24...25, 39...40, 49...50 = insert number in place of k_{vs} value

Threaded 2-port and 3-port valves with 5.5 mm actuators

Typical applications	Actuators	Data sheet					5.5 mm	
– Heating plants – District heating – Ventilation and air conditioning plants	SQS..	N4573					400 N	400 N
	Operating voltage	Positioning signal	Positioning time [s]		Spring return function			
	AC 230 V	3-position	150	150	✓	–	SQS35.50	SQS35.00
		3-position	35	35	✓	–	SQS35.53	SQS35.03
	AC 24 V	3-position	–	150	–	–	–	SQS85.00
		3-position	–	35	–	–	–	SQS85.03
		0...10 V	35	35	✓	–	SQS65.5	SQS65
		2...10 V	–	35	–	–	–	SQS65.2

PN 16	1...120 °C			DN	G [inch]	k_{vs} [m³/h]	Δp_s [kPa]	Δp_{max} [kPa]
Data sheet	N4364		N4464					
	VVG44.15-..		VXG44.15-..	15	G 1B	0.25 / 0.4 / 0.63	1600	400
	VVG44.15-..		VXG44.15-..	15	G 1B	1 / 1.6	725	400
	VVG44.15-..		VXG44.15-..	15	G 1B	2.5 / 4	400	400
	VVG44.20-6.3		VXG44.20-6.3	20	G 1¼B	6.3	750	400
	VVG44.25-10		VXG44.25-10	25	G 1½B	10	400	400
	VVG44.32-16		VXG44.32-16	32	G 2B	16	250	250
	VVG44.40-25		VXG44.40-25	40	G 2¼B	25	125	125

PN 25	1...130 °C	DN	G [inch]	k_{vs} [m³/h]	Δp_s [kPa]	Δp_{max} [kPa]
Data sheet	N4379					
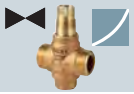	VVG55.15-..	15	G ¾B	0.25 / 0.4 / 0.63	2500	1200
	VVG55.15-..	15	G ¾B	1 / 1.6 / 2.5	2000	1200
	VVG55.20-4	20	G 1B	4	1000	1000
	VVG55.25-6.3	25	G 1¼B	6.3	800	800

Typical applications	Actuators	Data sheet					5.5 mm	
– Heating plants – Ventilation plants	SSC..	N4895					300 N	
	Operating voltage	Positioning signal	Positioning time [s]		Spring return function			
	AC 230 V	3-position	150	–	–	–	SSC31	–
	AC 24 V	3-position	150	–	–	–	SSC81	–
	AC/DC 24 V	0...10 V	30	30	–	✓	SSC61	SSC61.5

PN 16	1...110 °C			DN	G [inch]	k_{vs} [m3/h]	Δp_s [kPa]	Δp_{max} [kPa]
Data sheet	N4845		N4845					
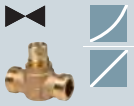	VVP45.20-4	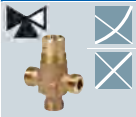	VXP45.20-4	20	G 1B	4	350	350
	VVP45.25-6.3		VXP45.25-6.3	25	G 1¼B	6.3	300	300
	VVP45.25-10		VXP45.25-10	25	G 1½B	10	300	300
	VVP45.32-16		VXP45.32-16	32	G 2B	16	175	175
	VVP45.40-25		VXP45.40-25	40	G 2¼B	25	75	75

Threaded 2-port and 3-port valves with 20 mm actuators

Typical applications	Actuators	Data sheet				Spring return function	20 mm		
– Heating plants – Ventilation and air conditioning plants – Heat generation – Heat distribution – District heating	SAX.. SKD.. SKB..	N4501 N4561 N4564					800 N	1000 N	2800 N
	Operating voltage	Positioning signal	Positioning time [s] SAX	SKD	SKB				
	AC 230 V	3-position	120	120	120	–	SAX31.00	SKD32.50	SKB32.50
		3-position	–	120	120	✓	–	SKD32.51	SKB32.51
		3-position	30	–	–	–	SAX31.03	–	–
		3-position	–	30	–	✓	–	SKD32.21	–
	AC 24 V [1]	3-position	120	120	120	–	SAX81.00	SKD82.50	SKB82.50
		3-position	–	120	120	✓	–	SKD82.51	SKB82.51
		3-position	30	–	–	–	SAX81.03	–	–
		0...10 V, 4...20 mA	–	30	120	–	–	SKD60	SKB60
		0...10 V, 4...20 mA	–	30	120	✓	–	SKD62	SKB62
	AC/DC 24 V	0...10 V, 4...20 mA	30	–	–	–	SAX61.03	–	–

PN 16	-25...150 °C				DN	G [inch]	k_{vs} [m3/h]	Δp_s [kPa]	Δp_{max} [kPa]	Δp_s [kPa]	Δp_{max} [kPa]	Δp_s [kPa]	Δp_{max} [kPa]
Data sheet	N4363		N4463										
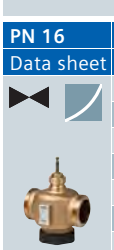	VVG41.11..12		–	–	15	G 1B	0.63 / 1	1600	800	1600	800	1600	800
	VVG41.13		–	VXG41.1301	15	G 1B	1.6	1600	800	1600	800	1600	800
	VVG41.14		–	VXG41.1401	15	G 1B	2.5	1600	800	1600	800	1600	800
	VVG41.15		VXG41.15	VXG41.1501	15	G 1B	4	1600	800	1600	800	1600	800
	VVG41.20		VXG41.20	VXG41.2001	20	G 1¼B	6.3	1600	800	1600	800	1600	800
	VVG41.25		VXG41.25	VXG41.2501	25	G 1½B	10	1550	800	1600	800	1600	800
	VVG41.32		VXG41.32	VXG41.3201	32	G 2B	16	875	800	1275	800	1600	800
	VVG41.40		VXG41.40	VXG41.4001	40	G 2¼B	25	525	525	775	775	1600	800
	VVG41.50		VXG41.50	VXG41.5001	50	G 2¾B	40	300	300	450	450	1225	800

.. = k_{vs} value
[1] SAX81..: AC/DC 24 V

7

2-port and 3-port valves fitted with magnetic actuator

Typical applications	Valve type	Operating voltage	Positioning signal	Type suffix
– Supply air control with/without cascade – Fast-acting heat exchanger control – Domestic hot water mixing control – High-precision process control	**MXF461..**	AC 24 V	0...10 V, 2...10 V, 4...20 mA	P
	M3P..FY..	AC 24 V	0...10 V, 4...20 mA	P [1]
	MVF461H..	AC/DC 24 V	0...10 V, 2...10 V, 0...20 mA, 4...20 mA	–
	MXG461..	AC 24 V	0...10 V, 2...10 V, 4...20 mA	P
	MXG461B..	AC/DC 24 V	0...10 V, 2...10 V, 0...20 mA, 4...20 mA	–
	MXG461S..	AC 24 V	0...10 V, 2...10 V, 4...20 mA	–
	MXG462S..	AC/DC 24 V	0...10 V, 2...10 V, 0...20 mA, 4...20 mA	–

PN 16	1...130 °C	DN	k_{vs} [m³/h]	Δp_s [kPa]	Δp_{max} [kPa]	Note
Data sheet	N4455					
	MXF461.15-..	15	0.6 / 1.5 / 3	300	300	To be used as 2-port or mixing valves, not as diverting valves. Selectable valve characteristic: equal-percentage or linear.
	MXF461.20-5.0	20	5	300	300	
	MXF461.25-8.0	25	8	300	300	
	MXF461.32-12	32	12	300	300	
	MXF461.40-20	40	20	300	300	
	MXF461.50-30	50	30	300	300	
	MXF461.65-50	65	50	300	300	
	1...120 °C					
	N4454					
	M3P80FY	80	80	300	300	
	M3P100FY	100	130	200	200	

PN 16	1...180 °C	DN	k_{vs} [m³/h]	Δp_s [kPa]	Δp_{max} [kPa]
Data sheet	N4361				
	MVF461H15-..	15	0.6 / 1.5 / 3	1000	1000
	MVF461H20-5	20	5	1000	1000
	MVF461H25-8	25	8	1000	1000
	MVF461H32-12	32	12	1000	1000
	MVF461H40-20	40	20	1000	1000
	MVF461H50-30	50	30	1000	1000

PN 16	1...130 °C	DN	G [inch]	k_{vs} [m³/h]	Δp_s [kPa]	Δp_{max} [kPa]
Data sheet	N4455					
	MXG461.15-..	15	G 1B	0.6 / 1.5 / 3	300	300
	MXG461.20-5.0	20	G 1¼B	5	300	300
	MXG461.25-8.0	25	G 1½B	8	300	300
	MXG461.32-12	32	G 2B	12	300	300
	MXG461.40-20	40	G 2¼B	20	300	300
	MXG461.50-30	50	G 2¾B	30	300	300

PN 16	-20...130 °C	DN	G [inch]	k_{vs} [m³/h]	Δp_s [kPa]	Δp_{max} [kPa]
Data sheet	N4461					
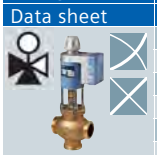	**MXG461B15-..**	15	G 1B	0.6 / 1.5 / 3	1000	1000
	MXG461B20-5	20	G 1¼B	5	800	800
	MXG461B25-8	25	G 1½B	8	700	700
	MXG461B32-12	32	G 2B	12	600	600
	MXG461B40-20	40	G 2¼B	20	600	600
	MXG461B50-30	50	G 2¾B	30	600	600

PN 16	1...130 °C	-20...130 °C	DN	G [inch]	k_{vs} [m³/h]	Δp_s [kPa]	Δp_{max} [kPa]	Note
Data sheet	N4465	N4466						
	MXG461S15-1.5	–	15	G 1B	1.5	300	300	To be used as 2-port or mixing valves, not as diverting valves. Selectable valve characteristic: equal-percentage or linear. [2]
	MXG461S20-5.0	–	20	G 1¼B	5	300	300	
	MXG461S25-8.0	–	25	G 1½B	8	300	300	
	MXG461S32-12	–	32	G 2B	12	300	300	
	–	**MXG462S50-30**	50	G 2¾B	30	600	600	

[1] P = media containing mineral oil
[2] Parts that are in contact with medium in stainless steel

Union nuts for threaded valves [3)]

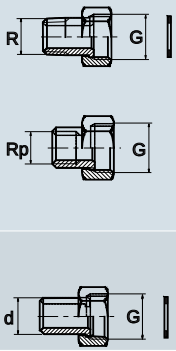

Type Set of 2	Type Set of 3	G [inch]	R, Rp [inch]	Material
ALG132	ALG133	G ½B	R ⅜ (externally threaded)	Brass
ALG142	ALG143	G ¾B	R ½ (externally threaded)	Brass
ALG122	ALG123	G ¾B	Rp ⅜	Malleable cast iron
ALG152	ALG153	G 1B	Rp ½	Malleable cast iron
ALG152B	ALG153B	G 1B	Rp ½	Brass
ALG202	ALG203	G 1¼B	Rp ¾	Malleable cast iron
ALG202B	ALG203B	G 1¼B	Rp ¾	Brass
ALG252	ALG253	G 1½B	Rp 1	Malleable cast iron
ALG252B	ALG253B	G 1½B	Rp 1	Brass
ALG322	ALG323	G 2B	Rp 1¼	Malleable cast iron
ALG322B	ALG323B	G 2B	Rp 1¼	Brass
ALG402	ALG403	G 2¼B	Rp 1½	Malleable cast iron
ALG402B	ALG403B	G 2¼B	Rp 1½	Brass
ALG502	ALG503	G 2¾B	Rp 2	Malleable cast iron
ALG502B	ALG503B	G 2¾B	Rp 2	Brass

Type Set of 2	G [inch]	Ød [mm]	Material
ALS152	G ¾B	21.3	Steel, weldable
ALS202	G 1B	26.8	Steel, weldable
ALS252	G 1¼B	33.7	Steel, weldable

[3)] Valve side: cylindrical thread G according to ISO 228-1, pipe side: ALG.. with cylindrical Rp- or tapered R-thread according to ISO 7-1
Pipe side: ALS.. with welded connection

2-port and 3-port ball valves with rotary actuators

Typical applications	Actuators	Data sheet					Spring return function	2 Nm	5 Nm	7 Nm	10 Nm
– Heating plants – Ventilation and air conditioning plants – Heat and cooling generation – Heat and cooling distribution	**GQD..9A** **GDB..9E** **GMA..9E** **GLB..9E**	N4659 N4657 N4658 N4657									
	Operating voltage	**Positioning signal**	**Positioning time [s]** GQD	GDB	GMA	GLB					
	AC 230 V	3-position	–	150	–	150	–	–	**GDB331.9E**	–	**GLB331.9E**
	AC 24 V	3-position	–	150	–	150	–	–	**GDB131.9E**	–	**GLB131.9E**
		0...10 V	–	150	–	150	–	–	**GDB161.9E**	–	**GLB161.9E**
	AC/DC 24 V	3-position	30 / 15	–	90 / 15	–	✓	**GQD131.9A**	–	**GMA131.9E**	–
		0...10 V	30 / 15	–	90 / 15	–	✓	**GQD161.9A**	–	**GMA161.9E**	–

PN 40	1...120 °C			DN	Rp [inch]	k_{vs} [m³/h]	Δp_s [kPa]	Δp_{max} [kPa]	Δp_s [kPa]	Δp_{max} [kPa]	Δp_s [kPa]	Δp_{max} [kPa]
Data sheet	N4211		N4211									
	VAI61.15-..		**VBI61.15-..**	15	Rp ½	1.6 / 2.5 / 4 / 6.3	1400	350	1400	350	1400	350
	VAI61.15-..		–	15	Rp ½	1 / 10	1400	350	1400	350	1400	350
	VAI61.20-..		**VBI61.20-..**	20	Rp ¾	4 / 6.3	1400	350	1400	350	1400	350
	VAI61.20-..		–	20	Rp ¾	10	1400	350	1400	350	1400	350
	VAI61.25-..		**VBI61.25-..**	25	Rp 1	10	–	–	1400	350	1400	350
	VAI61.25-..		–	25	Rp 1	6.3 / 16	–	–	1400	350	1400	350
	VAI61.32-..		–	32	Rp 1¼	10	–	–	–	–	1000	350
	VAI61.32-..		**VBI61.32-..**	32	Rp 1¼	16	–	–	–	–	1000	240
	VAI61.32-..		–	32	Rp 1¼	25	–	–	–	–	1000	240
	VAI61.40-..		–	40	Rp 1½	16	–	–	–	–	800	350
	VAI61.40-..		**VBI61.40-..**	40	Rp 1½	25	–	–	–	–	800	240
	VAI61.40-..		–	40	Rp 1½	40	–	–	–	–	800	240
	VAI61.50-..		–	50	Rp 2	25	–	–	–	–	600	350
	VAI61.50-..		**VBI61.50-..**	50	Rp 2	40	–	–	–	–	600	240
	VAI61.50-..		–	50	Rp 2	63	–	–	–	–	600	240

VBI61..: For noiseless operation, the Δp_{max} value of 200 kPa should not be exceeded

7

3-port and 4-port slipper valves with rotary actuators

Typical applications	Actuators	Data sheet				5 Nm	5 Nm	10 Nm
– Small to medium-size heating plants	**SQK34../84..** **SQK33..** **SAL..**	N4508 N4506 N4502						
	Operating voltage	**Positioning signal**	**Positioning time [s]**					
			SQK	SQK33	SAL			
	AC 230 V	3-position	135	125	120	**SQK34.00**	**SQK33.00**	**SAL31.00T10**
		3-position	–	–	30	**–**	**–**	**SAL31.03T10**
	AC 24 V	3-position	135	–	–	**SQK84.00**	**–**	**–**
	AC/DC 24 V	3-position	–	–	120	**–**	**–**	**SAL81.00T10**
		3-position	–	–	30	**–**	**–**	**SAL81.03T10**
		0...10 V, 4...20 mA	–	–	120	**–**	**–**	**SAL61.00T10**
		0...10 V, 4...20 mA	–	–	30	**–**	**–**	**SAL61.03T10**
	Mounting set [1]					**direct**	**ASK32**	**ASK31N**
PN 6	1...120 °C		DN		k_{vs} [m³/h]	Δp_{max} [kPa]	Δp_{max} [kPa]	Δp_{max} [kPa]
Data sheet	N4241							
	VBF21.40		40		25	30	30	–
	VBF21.50		50		40	30	30	–
	VBF21.65		65		63	–	–	30
	VBF21.80		80		100	–	–	30
	VBF21.100		100		160	–	–	30
	VBF21.125		125		550	–	–	30
	VBF21.150		150		820	–	–	30
PN 10	1...120 °C		DN	G [inch]	k_{vs} [m³/h]	Δp_{max} [kPa]	Δp_{max} [kPa]	Δp_{max} [kPa]
Data sheet	N4233							
	VBG31.20		20	G 1¼B	6.3	30	30	–
	VBG31.25		25	G 1½B	10	30	30	–
	VBG31.32		32	G 2B	16	30	30	–
	VBG31.40		40	G 2¼B	25	30	30	–
PN 10	1...120 °C		DN	Rp [inch]	k_{vs} [m³/h]	Δp_{max} [kPa]	Δp_{max} [kPa]	Δp_{max} [kPa]
Data sheet	N4232							
	VBI31.20		20	Rp ¾	6.3	30	30	–
	VBI31.25		25	Rp 1	10	30	30	–
	VBI31.32		32	Rp 1¼	16	30	30	–
	VBI31.40		40	Rp 1½	25	30	30	–
PN 10	1...120 °C		DN	Rp [inch]	k_{vs} [m³/h]	Δp_{max} [kPa]	Δp_{max} [kPa]	Δp_{max} [kPa]
Data sheet	N4252							
	VCI31.20		20	Rp ¾	6.3	30	30	–
	VCI31.25		25	Rp 1	10	30	30	–
	VCI31.32		32	Rp 1¼	16	30	30	–
	VCI31.40		40	Rp 1½	25	30	30	–

[1] **Mounting sets ASK40, ASK41 for products of other manufacturers:** mounting sets for SQK33.. for 3-port and 4-port slipper valves from AXA, BUDERUS, CENTRA, ESBE/SHUNT AB, LOELL, MUEHLENBERG, ONDAMIX and VIESSMANN. For additional details, see data sheet N4291.

Butterfly valves with rotary actuators

Typical applications	Actuators	Data sheet	Rotation angle / Torque	90° 5 Nm	90° 10 Nm
– Shutoff or control – For closed or open circuits	SAL.. SQK..	N4502 N4506			
	Operating voltage	**Positioning signal**	**Positioning time [s]**		
	AC 230 V	3-position	120	**SQK33.00**	**SAL31.00T10**
		3-position	30	–	**SAL31.03T10**
	AC/DC 24 V	3-position	120	–	**SAL81.00T10**
		3-position	30	–	**SAL81.03T10**
		0...10 V, 4...20 mA	120	–	**SAL61.00T10**
		0...10 V, 4...20 mA	30	–	**SAL61.03T10**
	Mounting set			**ASK33**	**ASK33N**

PN 16	-10...120 °C	DN	k_{vs} [m³/h]	Δp_s [kPa]	Δp_s [kPa]
Data sheet	N4131				
	VKF41.40	40	50	200	500
	VKF41.50	50	80	–	500
	VKF41.65	65	200	–	500
	VKF41.80	80	400	–	500
	VKF41.100	100	760	–	500
	VKF41.125	125	1000	–	300
	VKF41.150	150	2100	–	250
	VKF41.200	200	4000	–	125

Typical applications	Actuators	Data sheet	20 Nm	40 Nm		100 Nm	400 Nm	1200 Nm
– Shutoff or control – For closed or open circuits	SQL35../85.. SQL36..	N4505 N4505						
	Operating voltage	**Positioning signal time [s]**						
		3-position 6 [1]	–	–	–	**SQL36E65**	–	–
		3-position 12 [1]	–	–	–	–	**SQL36E110**	–
		3-position 24 [1]	–	–	–	–	–	**SQL36E160**
		3-position 25	–	**SQL36E50F04**	**SQL36E50F05**	–	–	–
		3-position 125	**SQL35.00**	–	–	–	–	–
	AC 24 V	3-position 125	**SQL85.00**	–	–	–	–	–
	Mounting set		**ASK35** .1 .2	–	–	–	–	–

PN 16	-10...120 °C	DN	k_{vs} [m³/h]	Δp_s [kPa]	Δp_s [kPa]	Δp_s [kPa]	Δp_s [kPa]	Δp_s [kPa]	Δp_s [kPa]	Δp_s [kPa]
Data sheet	N4136									
	VKF46.40	40	50	1600	–	1600	–	–	–	–
	VKF46.50	50	85	1600	–	1600	–	–	–	–
	VKF46.65	65	215	1600	–	1600	–	–	–	–
	VKF46.80	80	420	–	1600	–	1600	–	–	–
	VKF46.100	100	800	–	1600	–	1600	–	–	–
	VKF46.125	125	1010	–	1000	–	1000	–	–	–
	VKF46.150	150	2100	–	–	–	–	1600	–	–
	VKF46.200	200	4000	–	–	–	–	1000	–	–
	VKF46.250	250	6400	–	–	–	–	–	1000	–
	VKF46.300	300	8500	–	–	–	–	–	1000	–
	VKF46.350	350	11500	–	–	–	–	–	600	–
	VKF46.400	400	14500	–	–	–	–	–	300	–
	VKF46.450	450	20500	–	–	–	–	–	–	300
	VKF46.500	500	21000	–	–	–	–	–	–	300
	VKF46.600	600	29300	–	–	–	–	–	–	300
PN 16	**-10...120 °C**	**DN**	**k_{vs} [m³/h]**	**Δp_s [kPa]**	**Δp_s [kPa]**	**Δp_s [kPa]**	**Δp_s [kPa]**	**Δp_s [kPa]**	**Δp_s [kPa]**	**Δp_s [kPa]**
Data sheet	N4136									
	VKF46.350TS	350	11500	–	–	–	–	–	–	1000
	VKF46.400TS	400	14500	–	–	–	–	–	–	1000
	VKF46.450TS	450	20500	–	–	–	–	–	–	1000
	VKF46.500TS	500	21000	–	–	–	–	–	–	1000
	VKF46.600TS	600	29300	–	–	–	–	–	–	1000

[1] With auxiliary module SEZ31.1 variable positioning time: SQL36E65: 30...180 s, SQL36E110: 60...360 s, SQL36E160: 120...720 s

Recommended maximum flow velocity:

VKF41..: < 4 m/s for water, see data sheet for details

VKF46..: 4.5 m/s for water, 60 m/s for gas

Refrigerant valves

Typical applications	Valve	Operating voltage	Positioning signal	Auxiliary functions
– Expansion, direct/indirect hot-gas and hot-gas distribution applications – Suction gas applications – Condensate mixing – Brine plants	**M2FP03GX**	AC 24 V	0...10 V, 4...20 mA, 0...20 Phs	–
	MVL661..	AC/DC 24 V	0...10 V, 2...10 V, 0...20 mA, 4...20 mA	Minimum stroke setting
	MVS661..N	AC/DC 24 V	0...10 V, 2...10 V, 0...20 mA, 4...20 mA	Minimum stroke setting
	M3FB..LX..	AC 24 V	0...10 V, 4...20 mA, 0...20 Phs	–
	M3FK..LX..	AC 24 V	0...10 V, 4...20 mA, 0...20 Phs	–

PN 32	-40...100 °C		k_{vs} [m³/h]	Δp_{max} [kPa]
Data sheet	N4731			
	M2FP03GX	Pilot valve	0.3	1800

PS 45	-40...120 °C	DN	Connection	Inner Ø[inch]	k_{vs} [m³/h]	k_{vs} reduced [m³/h]	Δp_{max} [kPa]
Data sheet	N4714						
	MVL661.15-0.4	15	Sleeve	⅝	0.4	0.25	2500
	MVL661.15-1.0	15	Sleeve	⅝	1	0.63	2500
	MVL661.20-2.5	20	Sleeve	⅞	2.5	1.6	2500
	MVL661.25-6.3	25	Sleeve	1⅛	6.3	4	2500
	MVL661.32-12	32	Sleeve	1⅜	12	7.6	200

PS 53	-40...120 °C	DN	Connection	Inner Ø [mm]	Outer Ø [mm]	k_{vs} [m³/h]	k_{vs} reduced [m³/h]	Δp_{max} [kPa]
Data sheet	N4717							
	MVS661.25-016N	25	Weldable	22.4	33.7	0.16	0.1	2500
	MVS661.25-0.4N	25	Weldable	22.4	33.7	0.4	0.25	2500
	MVS661.25-1.0N	25	Weldable	22.4	33.7	1	0.63	2500
	MVS661.25-2.5N	25	Weldable	22.4	33.7	2.5	1.6	2500
	MVS661.25-6.3N	25	Weldable	22.4	33.7	6.3	4	2500

PN 32	-40...120 °C	DN	Connection	Inner Ø [inch]	k_{vs} [m³/h]	Liquid Δp_{max} [kPa]	Gas Δp_{max} [kPa]
Data sheet	N4722						
	M3FK15LX06	15	Sleeve	⅝	0.6	200	800
	M3FK15LX15	15	Sleeve	⅝	1.5	200	800
	M3FK15LX	15	Sleeve	⅝	3	200	800
	M3FK20LX	20	Sleeve	⅞	5	200	800
	M3FK25LX	25	Sleeve	1⅛	8	200	800
	M3FK32LX	32	Sleeve	1⅜	12	200	800
	M3FK40LX	40	Sleeve	1⅝	20	200	800
	M3FK50LX	50	Sleeve	2⅛	30	200	800

PS 43	-40...120 °C	DN	Connection	Inner Ø [inch]	k_{vs} [m³/h]	Δp_{max} [kPa]
Data sheet	N4721					
	M3FB15LX06/A	15	Sleeve	⅝	0.6	2200
	M3FB15LX15/A	15	Sleeve	⅝	1.5	2200
	M3FB15LX/A	15	Sleeve	⅝	3	2200
	M3FB20LX/A	20	Sleeve	⅞	5	1800
	M3FB25LX/A	25	Sleeve	1⅛	8	1200
	M3FB32LX	32	Sleeve	1⅜	12	800

										Recommended media															
		2-port valve	3-port valve	4-port valve	PN class	Type of connection	Silicon-free grease	Closed circuits	Open circuits	Chilled water	Cooling water [2]	Drinking water	Low temperature hot water	High temperature hot water	Water with anti-freeze [3]	Brines	Saturated steam	Superheated steam	Heat transfer oil	Media containing mineral oils	Mineral oil SAE05 ... SAE50	Diesel fuels based on mineral oil	Safety refrigerants	R744 (CO_2)	R717 (ammonia)	Air
Central HVAC plants	M3P..FY	■	■		16	F		■		■			■		■											
	M3P..FYP	■	■		16	F		■											■	■	■	■				
	MXF461..	■	■		16	F		■		■			■		■											
	MXF461..P	■	■		16	F		■											■	■	■	■				
	MXG461..	■	■		16	ET		■		■			■		■											
	MXG461B..	■	■		16	ET		■	■	■	■	■	■		■											
	MXG461..P	■	■		16	ET		■											■	■	■	■				
	MXG461S..	■	■		16	ET		■	■	■	■		■		■											
	MXG462S..	■	■		16	ET		■	■	■	■		■		■											
	MVF461H..	■			16	F		■		■			■	■	■		■	■								
	VAI61..	■			40	IT	■	■		■			■	■	■											
	VBF21..		■		6	F		■					■	■												
	VBG31..		■		10	ET		■					■	■												
	VBI31..		■		10	IT		■					■	■												
	VBI61..		■		40	IT	■	■		■			■	■	■											
	VCI31..			■	10	IT		■					■	■												
	VKF41..	■			16	F		■		■			■	■	■	■										
	VKF46..	■			16	F		■	■	■	■		■		■	■										■
	VVF21..	■			6	F	■	■		■			■	■	■	■										
	VVF31..	■			10	F	■	■		■			■	■	■	■										
	VVF40..	■			16	F	■	■		■			■	■	■	■										
	VVF43..	■			16	F	■	■	■	■	■		■	■	■	■	■	■	■							
	VVF53..	■			25	F	■	■	■	■	■		■	■	■	■	■	■	■							
	VVF61..	■			40	F		■	■	■	■		■	■	■	■	■	■	■							
	VVF61..2	■			40	F		■											■							
	VVG41..	■			16	ET	■	■	■	■	■		■	■	■	■	■	■								
	VVG44..	■			16	ET	■	■		■			■		■											
	VVG55..	■			25	ET	■	■		■			■	■	■											
	VXF21..		■		6	F	■	■		■			■	■	■	■										
	VXF31..		■		10	F	■	■		■			■	■	■	■										
	VXF40..		■		16	F	■	■		■			■	■	■	■										
	VXF43..		■		16	F	■	■	■	■	■		■	■	■	■			■							
	VXF53..		■		25	F	■	■	■	■	■		■	■	■	■			■							
	VXF61..		■		40	F		■	■	■	■		■	■	■	■			■							
	VXF61..2		■		40	F		■											■							
	VXG41..		■		16	ET	■	■	■	■	■		■	■	■	■										
	VXG41..01 [1]		■		16	ET	■	■	■	■	■	■	■	■	■	■										
	VXG44..		■		16	ET	■	■		■			■		■											
Room and zone applications	VD1..CLC	■			10	ET		■		■			■		■											
	VDN../VEN../VUN..	■			10	ET		■		■			■		■											
	VMP45..		■		16	ET		■		■			■		■											
	VMP47..		■		16	ET		■		■			■		■											
	VPD../VPE..	■			10	ET		■		■			■		■											
	VPI45.. [4]	■			25	IT		■		■			■		■											
	VPI46.. [4]	■			25	IT		■		■			■		■											
	VPP46.. [4]	■			25	ET		■		■			■		■											
	VVI46..	■			16	IT		■		■			■		■											
	VVP45..	■			16	ET		■		■			■		■											
	VVP47..	■			16	ET		■		■			■		■											
	VXI46..		■		16	IT		■		■			■		■											
	VXP45..		■		16	ET		■		■			■		■											
	VXP47..		■		16	ET		■		■			■		■											
Refrigeration systems	M2FP03GX				32	–		■															■		■	
	M3FB..LX..		■		PS 43	S		■															■			
	M3FK..LX..		■		32	S		■															■			
	MVL661..	■			PS 45	S		■															■	■		
	MVS661..N	■			PS 53	W		■															■	■	■	

Recommendation: Water treatment according to VDI 2035

[1] Sealed bypass

[2] Open circuits

[3] E.g. ethylene and propylene glycols

[4] As zone valve for floor heating systems

IT = internally threaded connection, ET = externally threaded connection, F = flanged connection, S = soldered connection, W = welded connection

Permissible medium temperature [°C]																	Generation				Distribution			Consumption/Use							
-40	-25	-20	-10	0	1	...	90	100	110	120	130	150	180	220	350		Boiler plants	District heating	Chiller plants	Cooling towers 2)	Domestic hot water (DHW)	Heating groups	Air handling units	Floor heating	Radiators	Zone control	Fan coil units	Chilled ceilings	Variable air volume (VAV)		
																		■	■		■	■	■							M3P.. FY	Central HVAC plants
																						■								M3P.. FYP	Central HVAC plants
																		■	■		■	■	■							MXF461..	Central HVAC plants
																						■								MXF461..P	Central HVAC plants
																		■	■		■	■	■							MXG461..	Central HVAC plants
																			■		■	■								MXG461B..	Central HVAC plants
																						■								MXG461..P	Central HVAC plants
																			■	■		■	■							MXG461S..	Central HVAC plants
																			■	■		■	■							MXG462S..	Central HVAC plants
																	■	■	■		■	■	■							MVF461H..	Central HVAC plants
																	■		■		■	■	■							VAI61..	Central HVAC plants
																	■					■								VBF21..	Central HVAC plants
																	■					■								VBG31..	Central HVAC plants
																	■					■								VBI31..	Central HVAC plants
																	■		■		■	■	■							VBI61..	Central HVAC plants
																	■					■								VCI31..	Central HVAC plants
																	■		■			■								VKF41..	Central HVAC plants
																	■		■	■	■	■								VKF46..	Central HVAC plants
																	■		■		■	■	■							VVF21..	Central HVAC plants
																	■	■	■		■	■	■							VVF31..	Central HVAC plants
																	■	■	■		■	■	■							VVF40..	Central HVAC plants
																	■	■	■	■	■	■	■							VVF43..	Central HVAC plants
																	■	■	■	■	■	■	■							VVF53..	Central HVAC plants
																	■	■	■		■	■	■							VVF61..	Central HVAC plants
																	■					■								VVF61..2	Central HVAC plants
																	■	■	■		■	■	■							VVG41..	Central HVAC plants
																	■	■	■		■	■	■							VVG44..	Central HVAC plants
																		■	■		■	■	■							VVG55..	Central HVAC plants
																	■		■		■	■	■							VXF21..	Central HVAC plants
																	■		■		■	■	■							VXF31..	Central HVAC plants
																	■		■		■	■	■							VXF40..	Central HVAC plants
																	■		■	■	■	■	■							VXF43..	Central HVAC plants
																	■		■	■	■	■	■							VXF53..	Central HVAC plants
																	■		■	■	■	■	■							VXF61..	Central HVAC plants
																	■					■								VXF61..2	Central HVAC plants
																	■		■	■	■	■	■							VXG41..	Central HVAC plants
																	■		■	■	■	■	■							VXG41..01 1)	Central HVAC plants
																	■		■		■	■	■							VXG44..	Central HVAC plants
																								■		■	■	■	■	VD1..CLC	Room and zone applications
																									■					VDN../VEN../VUN..	Room and zone applications
																										■	■		■	VMP45..	Room and zone applications
																										■	■		■	VMP47..	Room and zone applications
																								■	■	■	■	■	■	VPD../VPE..	Room and zone applications
																						■	■	■		■	■	■	■	VPI45.. 4)	Room and zone applications
																								■		■	■	■	■	VPI46.. 4)	Room and zone applications
																								■		■	■	■	■	VPP46.. 4)	Room and zone applications
																								■		■	■	■	■	VVI46..	Room and zone applications
																						■	■	■		■	■	■	■	VVP45..	Room and zone applications
																								■		■	■	■	■	VVP47..	Room and zone applications
																								■		■	■		■	VXI46..	Room and zone applications
																						■	■	■		■	■		■	VXP45..	Room and zone applications
																								■		■	■		■	VXP47..	Room and zone applications
																			■											M2FP03GX	Refrigeration systems
																			■											M3FB..LX..	Refrigeration systems
																			■											M3FK..LX..	Refrigeration systems
																			■											MVL661..	Refrigeration systems
																			■											MVS661..N	Refrigeration systems

7

Definitions

Abbr.	Term	Unit	Definition
Δp	Differential pressure	kPa	Pressure differential between plant sections.
Δp_{max}	Maximum differential pressure	kPa	Maximum permissible differential pressure across the valve's control path (when mixing), valid for the entire actuating range of the motorized valve.
Δp_{maxV}	Maximum differential pressure	kPa	Maximum permissible differential pressure across the valve's control path (when distributing), valid for the entire actuating range of the motorized valve.
Δp_{min}	Minimum differential pressure	kPa	Minimum differential pressure required, so that the differential pressure regulator works reliably with combi valves. Δp_{min} depends on presetting position, see data sheet for details.
Δp_{V0}		kPa	Maximum differential pressure across the valve's closed control path.
Δp_{V100}	Differential pressure at nominal flow rate	kPa	Differential pressure across the fully open valve and the valve's control path by a volumetric flow V_{100}.
Δp_s	Closing pressure	kPa	For 2-port valves, maximum permissible differential pressure at which the motorized valve will close securely against the pressure (close off pressure). Only valid for 2-port valves.
Δp_{MV}		kPa	Differential pressure across the variable flow path. Often Δp_{MV} is not known, in which case typical values can be used.
Δp_{VR}		kPa	Differential pressure between flow and return.
ΔT	Temperature spread	K	Temperature differential between flow and return.
DN	Nominal size		Characteristic for matching parts of the piping system.
H_0	Shutoff head	m	The head generated by a pump at closed value, at a given speed and a given pump medium.
kPa	Unit of pressure	kPa	100 kPa = 1 bar = 10 mWC
mWC	Meter water column	m	
k_V	Nominal flow	m³/h	Amount of cold water (5...30 °C) passing through the valve at the respective stroke and at a differential pressure of 100 kPa (1 bar).
k_{VS}	Nominal flow rate	m³/h	Nominal flow rate of cold water (5...30 °C) through the fully open valve (H_{100}) at a differential pressure of 100 kPa (1 bar).
	Spring return function		Shutoff in the event of a power failure.
PN	PN class		Characteristic relating to the combination of mechanical and dimensional properties of a component in the piping system.
Phs	Phase cut control signal	V	DC 0...20 V Phs
P_V	Valve authority		Ratio of differential pressure across fully open valve (H_{100}) and differential pressure across valve and variable flow path. To ensure correct control, a minimum valve authority of 0.25 is required.
Q_{100}	Rated capacity	kW	Plant's design capacity.
V_{100}	Volumetric flow	m³/h	Volumetric flow with valve fully open (H_{100}).
V_{min}	Minimum volumetric flow	m³/h	Smallest presettable volumetric flow through the fully open combi valve (H_{100}).
υ	Kinematic viscosity	mm²/s	In the case of kinematic viscosities υ up to 10 mm²/s, no corrections are required. For the selection of actuating devices for kinematic viscosities υ above 10 mm²/s, please contact your local Siemens branch office.
c	Specific heat capacity	kJ/kgK	
ρ	Specific density	kg/m³	

Symbols

	3-port valve, control path with equal-percentage valve characteristic, bypass with linear valve characteristic.
	3-port valve, control path with equal-percentage valve characteristic, bypass with linear valve characteristic with 70% of the k_{VS} value. This compensates for the flow resistance of the heat exchange, so that the total volumetric flow V_{100} remains as constant as possible.
	2-port valve, control path with equal-percentage valve characteristic.
	2-port valve, control path with linear valve characteristic.
	3-port, control path and bypass with linear valve characteristic. Bypass with 70% of the k_{vs} value. This compensates for the flow resistance of the heat exchanger, so that the total flow amount V_{100} remains as constant as possible.
	3-port valve, control path and bypass with linear valve characteristic.
	3-port valve, control path and bypass with equal-percentage valve characteristic.

Valve sizing and actuator selection

Basic hydraulic circuit								
1	**Determine the type of hydraulic circuit**	Throttling circuit	Injection circuit with 2-port valve	Diverting circuit	Injection circuit with 3-port valve	Mixing circuit		Mixing circuit with fixed premixing	
—	For valve sizing relevant variable flow path	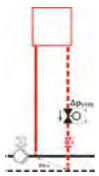		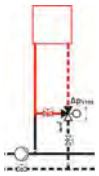		Primary pump ✓	Primary pump × 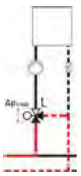	Primary pump ✓	Primary pump × 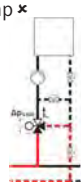

HVAC plants and consumers

Heating								
Surface/floor heating	–	■	–	outdated	–	–	■	■
Heating plant (primary)	–	■	■	outdated	■	■	■	■
Zone control, heating	–	■	–	outdated	–	–	–	–
Heating group	–	■	–	–	■	■	■	■
Generation of heat energy	–	–	–	–	–	■	–	■
Heat exchanger water-water	■	uncommon	uncommon	uncommon	uncommon	–	–	–
Ventilation and air conditioning plants								
Air handling unit (AHU)	■	■	■	outdated	■	■	–	–
Fan coil unit	■	–	■	outdated	–	–	–	–
Cooling coil	dehumidifying	–	dehumidifying	uncommon	–	–	–	–
Reheating coil	■	■	outdated	outdated	uncommon	uncommon	uncommon	uncommon
Preheating coil	–	■	–	outdated	uncommon	uncommon	uncommon	uncommon
VAV	■	–	■	outdated	–	–	–	–
Zone control	■	–	■	outdated	–	–	–	–
Chiller plants								
Surface/floor cooling	–	■	–	outdated	–	–	–	–
Generation of cooling energy	–	–	–	–	–	■	–	■
Cooling towers	■	–	■	uncommon	–	–	–	–
Zone control, cooling	–	■	–	outdated	–	–	–	–
District heating and cooling								
District heating, primary	■	uncommon	–	–	–	uncommon	–	uncommon
District heating, secondary	■	■	–	–	–	uncommon	–	uncommon
District cooling, primary	■	uncommon	–	–	–	uncommon	–	uncommon
District cooling, secondary	■	■	–	–	–	uncommon	–	uncommon
Domestic hot water (DHW)								
DHW	–	■	–	–	–	■	–	–

Header

Differential pressure header	pressurized		pressureless
Volumetric flow	variable	constant	variable

Determination of k_{vs} value

2	**Δp_{VR} or Δp_{MV}**	Δp_{VR}		Δp_{MV}					
	typical range	10...200 kPa	10...200 kPa	10...50 kPa	2...5 kPa	2...5 kPa	5...15 kPa	2...5 kPa	5...15 kPa
	typical value	Use effective Δp_{VR} value		35 kPa	3 kPa	3 kPa	8 kPa	3 kPa	8 kPa
3	**Determine Δp_{V100}**	$\Delta p_{V100} \geq \frac{\Delta p_{VR}}{2}$		$\Delta p_{V100} > \Delta p_{MV}$					
4	**Calculate V_{100}**	Water without anti-freeze $V_{100} = \frac{Q_{100}}{1.163 \cdot \Delta T}$		Water with anti-freeze $V_{100} = \frac{Q_{100} \cdot 3600}{c \cdot \rho \cdot \Delta T}$					
5	**Determine k_{vs} value**	$k_V = \frac{V_{100}}{\sqrt{\frac{\Delta p_{V100}}{100}}}$ => $k_{VS} \geq 0.85 \cdot k_V$ value							
6	**Check resulting Δp_{V100}**	$\Delta p_{V100} = 100 \cdot \left(\frac{V_{100}}{k_{VS}}\right)^2$							

Selection of valve and actuator

7	**Select suitable valve series**	a) Type of valve (2-port, 3-port, 3-port with bypass) b) Connections (flanged, threaded, soldered)	c) PN class d) Nominal size DN	e) Max/min medium temperature f) Medium	
8	**Check valve authority P_V (control stability)**	$P_V = \frac{\Delta p_{V100}}{\Delta p_{VR}} \geq 0.25...0.8$	$P_V = \frac{\Delta p_{V100}}{\Delta p_{V100} + \Delta p_{MV}} \geq 0.25...0.8$		
9	**Select actuator**	a) Operating voltage functions	b) Positioning signal	c) Positioning time	d) Spring return function	e) Auxiliary
10	**Check working range**	a) Differential pressure $\Delta p_{max} > \Delta p_{V0}$	b) Closing pressure $\Delta p_s > H_0$		
11	**Selection**	Valve and suitable actuator			

Size and select combi valves

Determine volumetric flow V				
1	**Determine Q_{100}**	Q_{100}		
2	**Determine ΔT**	ΔT		
3	**Calculate V**	Water without anti-freeze $V_{100} = \frac{Q_{100}}{1.163 \cdot \Delta T}$	Water with anti-freeze $V_{100} = \frac{Q_{100} \cdot 3600}{c \cdot \rho \cdot \Delta T}$	
Select combi valve and actuator				
4	**Select suitable combi valve**	a) Type of valve (with/without P/T plugs)[1)] d) Connection (flanged, threaded)	b) PN class e) Nominal size DN	c) Max/min medium temperature f) Medium
5	**Determine presetting**	Determine presetting using the volumetric flow/dial table in data sheet of the respective combi valve		
6	**Select actuator**	a) Operating voltage b) Positioning signal c) Positioning time d) Auxiliary functions		
7	**Check working range**	a) $\Delta p < \Delta p_{max}$ – maximum permissible differential pressure across the valve's control path, valid for the entire actuating range of the motorized valve b) $\Delta p > \Delta p_{min}$ – minimum differential pressure required across the valve's control path, so that the differential pressure regulator works reliably		
8	**Select actuator**	Combi valve and suitable actuator		

7

Sizing chart for flanged and threaded valves

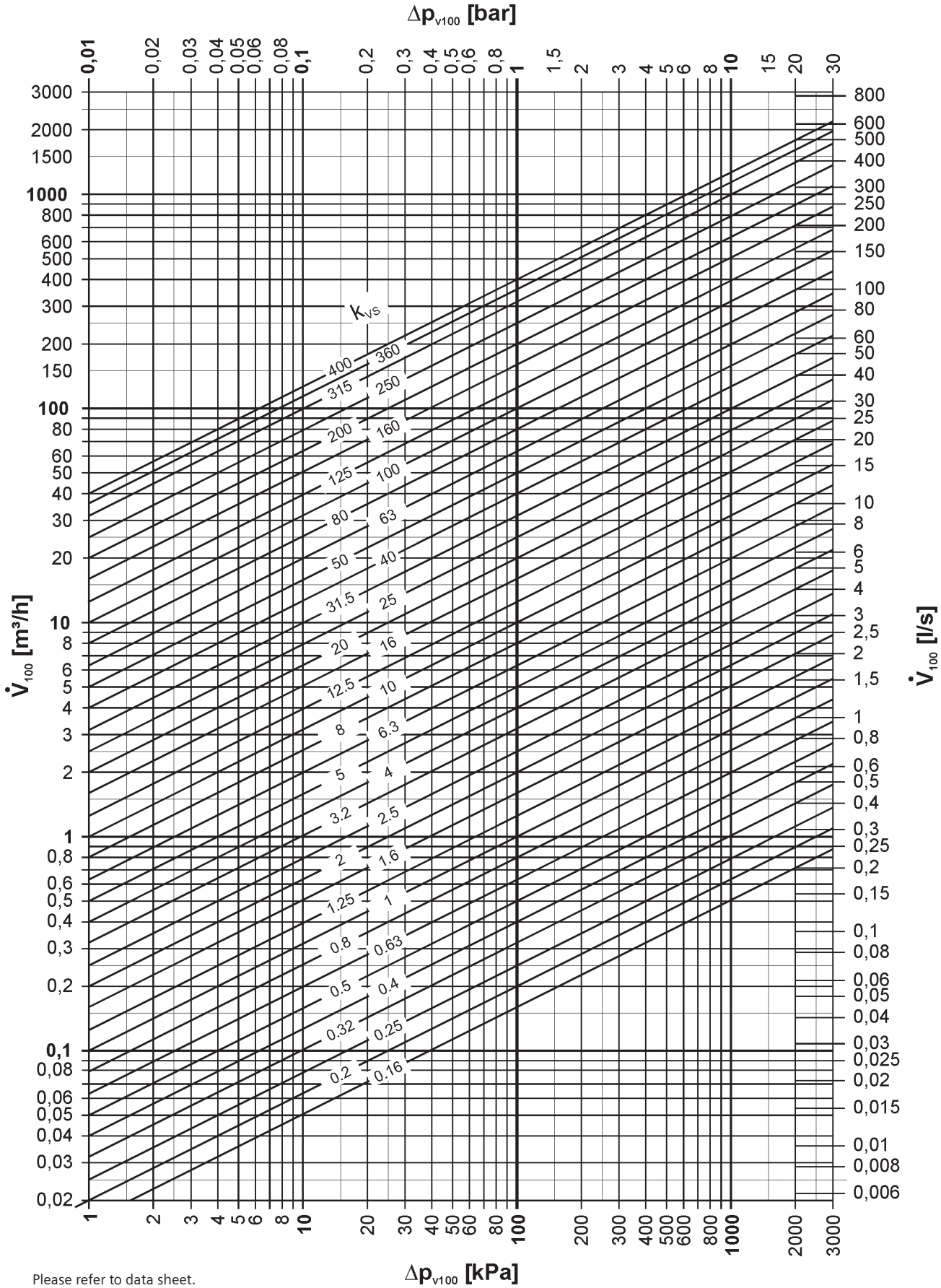

Please refer to data sheet.

Sizing chart / Presetting for radiator valves VDN../VEN../VUN..

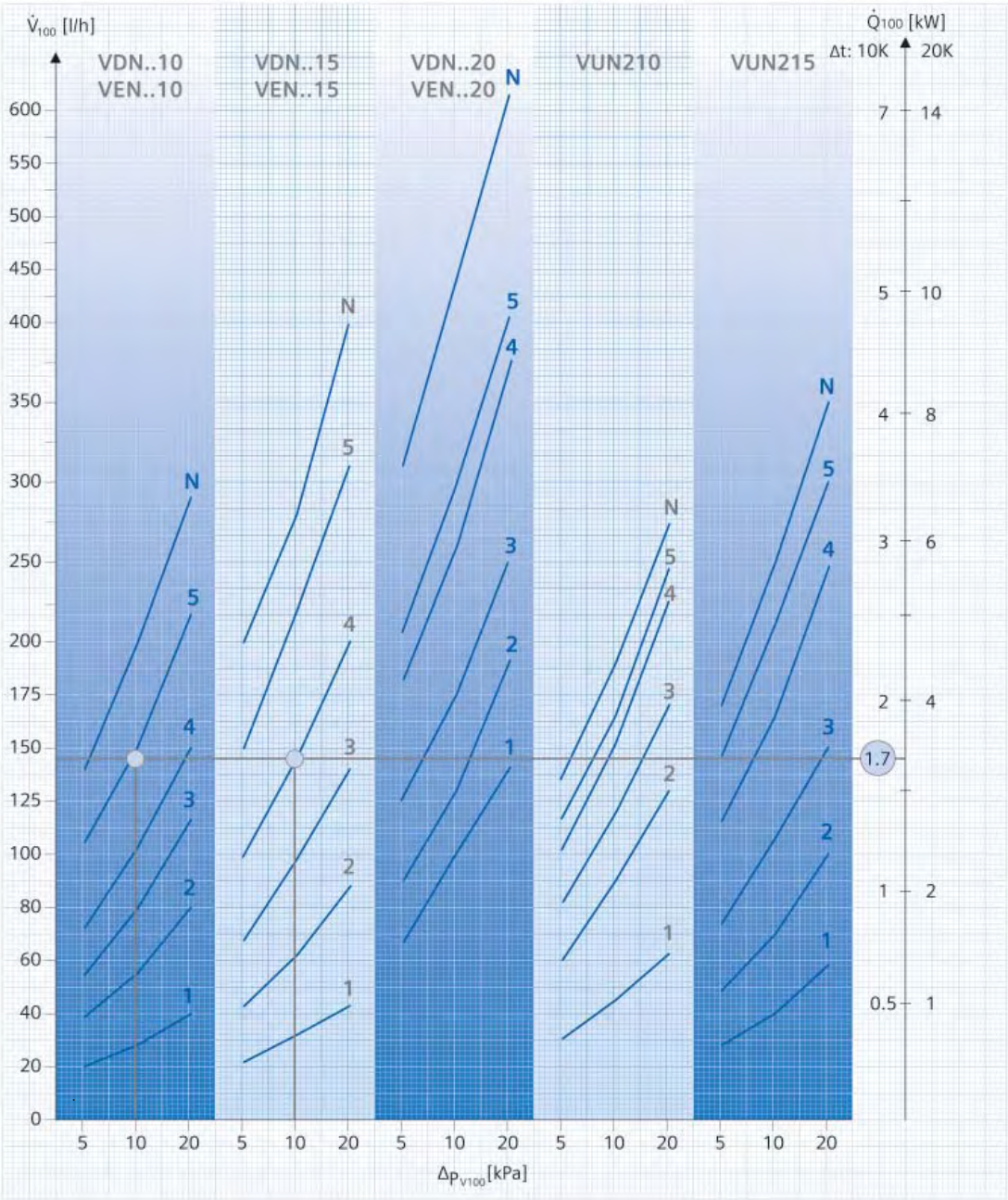

Example

Given:
Q = 1.7 kW
Δt = 10 K
Δp_{V100} = 10 kPa

Solution:
VDN..10, presetting 5
or VDN..15, presetting 4
etc.

We know from experience that the majority of plant operate with a Δp_{V100} of 5...20 kPa (0.05...0.2 bar).
For detailed charts, refer to the relevant data sheets.

Sizing chart for combi valves

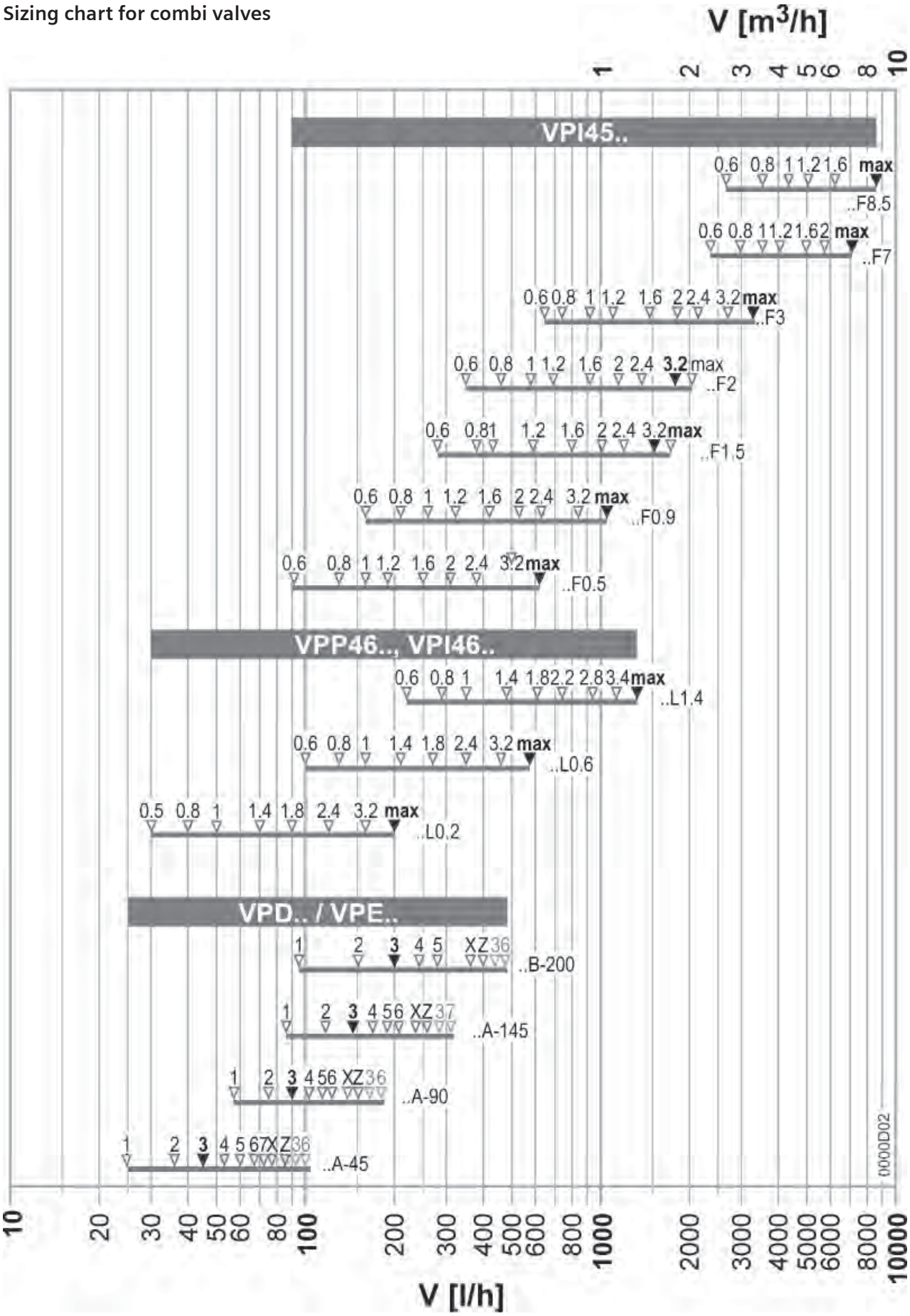

Dimensions threaded valves [mm]

	Type	PN	DN10	DN15	DN20	DN25	DN32	DN40	DN50
L1 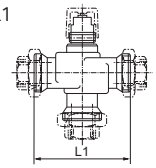	V..G41..	16	–	100	100	105	105	130	150
	V..G44..	16	–	100	100	105	105	130	–
	VVP45../VXP45..	16	60	65	80	80/105	105	130	–
	VVG55..	25	–	65	70	75	–	–	–
L3 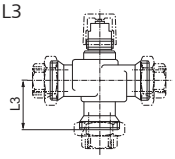	VXG41..	16	–	50	50	52.5	52.5	65	75
	VXG44..	16	–	50	50	52.5	52.5	65	–
	VVP45../VXP45..	16	30	32.5	40	40/52.5	52.5	65	–
D 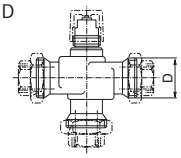	V..G41..	16	–	G 1B	G 1¼B	G 1½B	G 2B	G 2¼B	G 2¾B
	V..G44..	16	–	G 1B	G 1¼B	G 1½B	G 2B	G 2¼B	–
	VVP45../VXP45..	16	G ½B	G ¾B	G 1B	G 1¼B/G 1½B	G 2B	G 2¼B	–
	VVG55..	25	–	G ¾B	G 1B	G 1¼B	–	–	–

Dimensions flanged valves [mm]

	Type	PN	DN15	DN20	DN25	DN32	DN40	DN50	DN65	DN80	DN100	DN125	DN150
L1 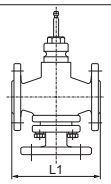	V..F21..	6	–	–	150	–	180	200	240	260	300	–	–
	V..F31..	10	130	–	160	–	200	230	290	310	350	400	480
	V..F40..	16	130	–	160	–	200	230	290	310	350	400	480
	V..F43..	16	–	–	–	–	–	–	290	310	350	400	480
	V..F53..	25	130	150	160	180	200	230	290	310	350	400	480
	V..F61..	40	130	–	160	–	200	230	290	310	350	400	480
L3 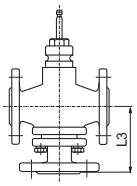	VXF21..	6	–	–	75	–	90	100	120	130	150	–	–
	VXF31..	10	65	–	80	–	100	115	145	155	175	200	240
	VXF40..	16	65	–	80	–	100	115	145	155	175	200	240
	VXF43..	16	–	–	–	–	–	–	145	155	175	200	240
	VXF53..	25	65	75	80	90	100	115	145	155	175	200	240
	VXF61..	40	65	–	80	–	162	170	215	230	250	280	305
K 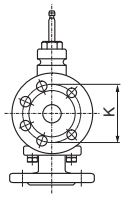	V..F21..	6	–	–	75	–	100	110	130	150	170	–	–
	V..F31..	10	65	–	85	–	110	125	145	160	180	210	240
	V..F40..	16	65	–	85	–	110	125	145	160	180	210	240
	V..F43..	16	–	–	–	–	–	–	145	160	180	210	240
	V..F53..	25	65	75	85	100	110	125	145	160	190	220	250
	V..F61..	40	65	–	85	–	110	125	145	160	190	220	250
D2 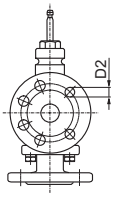	V..F21..	6	–	–	11 (4x)	–	14 (4x)	14 (4x)	14 (4x)	19 (4x)	19 (4x)	–	–
	V..F31..	10	14 (4x)	–	14 (4x)	–	19 (4x)	19 (4x)	19 (4x)	19 (8x)	19 (8x)	19 (8x)	23 (8x)
	V..F40..	16	14 (4x)	–	14 (4x)	–	19 (4x)	19 (4x)	19 (4x)	19 (8x)	19 (8x)	19 (8x)	23 (8x)
	V..F43..	16	–	–	–	–	–	–	19 (4x)	19 (8x)	19 (8x)	19 (8x)	23 (8x)
	V..F53..	25	14 (4x)	14 (4x)	14 (4x)	19 (4x)	19 (4x)	19 (4x)	19 (8x)	19 (8x)	23 (8x)	28 (8x)	28 (8x)
	V..F61..	40	14 (4x)	–	14 (4x)	–	18 (4x)	18 (4x)	18 (8x)	22 (8x)	22 (8x)	26 (8x)	26 (8x)

Thermostatic actuators

RTN..

Thermostatic actuators for controlling the room temperature. Setpoint adjustment with knob. Versions with shutoff and frost protection position.
Limit stops for minimum and maximum values or setpoint locking.
Mounts directly on Siemens radiator valves VDN../VEN../VUN../VPD../VPE..

Data sheet N2111

Thermostatic actuators RTN51

Design	Surface treatment	Setpoint setting range	Stock No.	Product No.
Frost protection position Closing position	RAL 9016, matt	12...28 °C	BPZ:RTN51	**RTN51**
Frost protection position Closing position	RAL 9016, glossy	12...28 °C	BPZ:RTN51G	**RTN51G**

Thermostatic actuators with remote sensor RTN71

Design	Surface treatment	Setpoint setting range	Capillary length	Stock No.	Product No.
Remote sensor Frost protection position Closing position	RAL 9016, matt	12...28 °C	2 m	BPZ:RTN71	**RTN71**

Thermostatic actuators with remote adjuster RTN81

Design	Surface treatment	Setpoint setting range	Capillary length	Stock No.	Product No.
Remote sensor Frost protection position	RAL 9016, matt	8...28 °C	2 m	BPZ:RTN81	**RTN81**

Accessories for thermostatic actuators RTN..

Product Title	Data sheet	Stock No.	Product No.
Adapter for valves of other manufacture	N2179	BPZ:AV..	**AV..**

Actuators for globe and pressure independent combi valves
Positioning force 100 N: SSA..

SSA..

Electromotoric actuators 100 N for valves with 2.5/5 mm stroke

For radiator valves, small valves and Combi valves

Electromotoric actuators for modulating or 3-position control of heating systems, chilled ceilings and terminal units. With automatic stroke adaption, force-dependent switching off in the end position, position indication, manual control and plug-in type connecting cable. Suited for use with Siemens radiator valves VDN../VEN../VUN../VPD../VPE.., Siemens small valves VD1..CLC and on radiator valves with M30 x 1.5 connection (Heimeier, Cazzaniga, Oventrop M30x1,5, Honeywell-Braukmann, MNG, Junkers, Beulco new). Further valves of other manufacture on request.
Suited for Siemens Combi valves VPP46../VPI46.. with 2.5, respectively 5 mm stroke.

Data sheet	N4893
Positioning force	100 N
Stroke	2.5 mm 5 mm
Degree of protection	IP40
Ambient temperature, operation	1...50 °C
Mounting position	Upright to 90° inclined

For fitting to the valve: Cap nut M30 x 1.5
SSA61..: 1.5 mm minimal stroke required for self calibration

Range overview actuators SSA..

Operating voltage	Power consumption [VA]	Positioning signal	Positioning time [s]	Auxiliary switch	Cable length [m]	Stock No.	Product No.
AC 230 V	6	3-position	150	0	1.5	BPZ:SSA31	**SSA31**
AC 24 V	0.8	3-position	150	0	1.5	BPZ:SSA81	**SSA81**
AC 24 V DC 24 V	2.5	DC 0...10 V	34	0	1.5	BPZ:SSA61	**SSA61**
AC 230 V	6	3-position	150	1	1.5	BPZ:SSA31.1	**SSA31.1**
AC 24 V	0.8	3-position	150	1	1.5	BPZ:SSA81.1	**SSA81.1**
AC 230 V	6	3-position	150	0		BPZ:SSA31/00	**SSA31/00**
AC 24 V	0.8	3-position	150	0		BPZ:SSA81/00	**SSA81/00**
AC 24 V DC 24 V	2	DC 0...10 V	34	0		BPZ:SSA61/00	**SSA61/00**

Positioning time for 2.5 mm stroke
Auxilary switch: Changeover contact AC 250 V, 1 A res., 0.5 A ind., adjustable switching point 0...100 %

SSA../00: Cable selection see accessories for SSA..

Accessories for SSA..

Product Title	Data sheet	Stock No.	Product No.
Adapter for tamper-proof fitting for SSA.. actuators	N4893	BPZ:AL40	**AL40**
Adapter for valves of other manufacture	N2179	BPZ:AV..	**AV..**
Connecting cable 1.5 m, 3-position, AC 230 V		BPZ:ASY3L15	**ASY3L15**
Connecting cable 2.5 m, 3-position, AC 230 V		BPZ:ASY3L25	**ASY3L25**
Connecting cable 4.5 m, 3-position, AC 230 V		BPZ:ASY3L45	**ASY3L45**
Connecting cable 1.5 m, DC 0...10 V, AC/DC 24 V		BPZ:ASY6L15	**ASY6L15**
Connecting cable 2.5 m, DC 0...10 V, AC/DC 24 V		BPZ:ASY6L25	**ASY6L25**
Connecting cable 4.5 m, DC 0..10 V, AC/DC 24 V		BPZ:ASY6L45	**ASY6L45**
Connecting cable 4.5 m, DC 0...10 V, AC/DC 24 V, halogen-free, VDE 0207-24		BPZ:ASY6L45HF	**ASY6L45HF**
Connecting cable 1.5 m, 3-position, AC 24 V		BPZ:ASY8L15	**ASY8L15**
Connecting cable 2.5 m, 3-position, AC 24 V		BPZ:ASY8L25	**ASY8L25**
Connecting cable 4.5 m, 3-position, AC 24 V		BPZ:ASY8L45	**ASY8L45**
Connecting cable 4.5 m, 3-position, AC 24 V, halogen-free, VDE 0207-24		BPZ:ASY8L45HF	**ASY8L45HF**
Retaining screw for cable connector		BPZ:ASY98	**ASY98**
Terminal block connector 3 position, AC 24 V for SSA81../SSB81../SSD81../SSP81..		BPZ:ASY99	**ASY99**
Terminal block connector DC0...10 V, AC 24 V for SSA61../SSB61../SSP61../SSD61..	N4864	BPZ:ASY100	**ASY100**

Accessories for SSP.. (N4864), SSA.. (N4893), SSB.. (N4891) and SSD.. (N4861)

Actuators for globe and pressure independent combi valves
Positioning force 100 N: SSA..

Range overview adapters AV..

Adapter for	Data sheet	Stock No.	Product No.
Beulco M30 x 1	N2100	BPZ:AV51	**AV51**
Comap	N2100	BPZ:AV52	**AV52**
Danfoss RA2000	N2100	BPZ:AV53	**AV53**
Danfoss RA2000, plastic design	N4884	S55174-A164	AV533
Danfoss RAVL	N2100	BPZ:AV54	**AV54**
Danfoss RAV	N2100	BPZ:AV55	**AV55**
Giacomini	N2100	BPZ:AV56	**AV56**
Herz	N2100	BPZ:AV57	**AV57**
Oventrop old (M 30x1.0)	N2100	BPZ:AV58	**AV58**
Vaillant	N2100	BPZ:AV59	**AV59**
TA	N2100	BPZ:AV60	**AV60**
Markaryd (MMA)	N2100	BPZ:AV61	**AV61**

Note:
Beulco: Not to be used with RTN.., for old make of Beulco distributors only
Oventrop: Introduced M30 x 1.5 in 2001 and requires no adapter
TA (Heimeier): Introduced M30 x 1.5 in 2003 and requires no adapter

Fitting the actuators to valves of other manufacture (M30 x 1.5) without adapter:
- Heimeier
- Junkers
- Honeywell Braukmann
- MNG
- Cazzaniga
- Oventrop M30 x 1.5 (from 2001)
- Beulco new

Electrothermal actuators with and without connecting cable for radiator, small, and zone valves

STA..3

Electrothermal actuators with and without connecting cable for:
- Radiator valves VDN.., VEN.., VUN..
- MCV MiniCombiValves VPD.., VPE..
- Small valves VD1..CLC..
- Zone valves V..I46..
- Combi valves VPP46.., VPI46..
- Valves of other manufacturers

Actuators without connecting cable can be equipped with:
- Connecting cable up to 15 m, also halogen-free
- Connecting cable with LED operation indicator
- Connecting cable with auxiliary switch or DC 0...10 V module

Data sheet	N4884
Stroke	4.5 mm
Degree of protection	IP54
Mounting position	Any, 360°
Power consumption	2.5 W

Range overview actuators STA..3

Operating voltage	Positioning time [s]	Positioning signal	Cable length [m]	Stock No.	Product No.
AC 230 V	210	2-position	1	S55174-A101	STA23
AC 24 V	30	DC 0...10	1	S55174-A104	STA63
AC 24 V DC 24 V	270	2-position PDM	1	S55174-A100	STA73
AC 230 V	210	2-position	0.8	S55174-A107	STA23HD
AC 24 V DC 24 V	270	2-position	0.8	S55174-A106	STA73HD
AC 230 V	210	2-position		S55174-A110	STA23/00
AC 230 V	210	2-position		S55174-A118	STA23B/00
AC 230 V	210	2-position		S55174-A114	STA23MP/00
AC 24 V DC 24 V	270	2-position PDM		S55174-A109	STA73/00
AC 24 V DC 24 V	270	2-position PDM		S55174-A117	STA73B/00
AC 24 V DC 24 V	270	2-position PDM		S55174-A113	STA73MP/00
AC 24 V DC 24 V	270	2-position PDM/parallel opera-tion		S55174-A115	STA73PR/00

The given positioning time is related to the maximum stoke of 4.5 mm.

NEW PRODUCT

Actuators for globe and pressure independent combi valves
Positioning force 100 N: STA..3

Connection cable for STA..3

For suitable combination of actuator STA.. and connection cable ASY.., see chapter introduction page 7-4

Positioning signal	Auxiliary switch	Display	Color	Cable length	Material	Stock No.	Product No.
2-position	0		White	0.8 m	PVC	S55174-A121	ASY23L08
2-position	0		White	1 m	PVC	S55174-A122	ASY23L10
2-position	0		White	2 m	PVC	S55174-A123	ASY23L20
2-position	0		White	3 m	PVC	S55174-A124	ASY23L30
2-position	0		White	4 m	PVC	S55174-A125	ASY23L40
2-position	0		White	5 m	PVC	S55174-A126	ASY23L50
2-position	0		White	6 m	PVC	S55174-A127	ASY23L60
2-position	0		White	7 m	PVC	S55174-A128	ASY23L70
2-position	0		White	10 m	PVC	S55174-A129	ASY23L100
2-position	0		White	15 m	PVC	S55174-A130	ASY23L150
2-position	0		Black	3 m	PVC	S55174-A131	ASY23L30B
2-position	0		Black	5 m	PVC	S55174-A132	ASY23L50B
2-position	0		Black	10 m	PVC	S55174-A133	ASY23L100B
2-position	0		White	2 m	Halogen-free	S55174-A134	ASY23L20HF
2-position	0		White	5 m	Halogen-free	S55174-A135	ASY23L50HF
2-position	0		White	10 m	Halogen-free	S55174-A136	ASY23L100HF
DC 0...10 V	0		White	2 m	PVC	S55174-A137	ASY6AL20
DC 0...10 V	0		White	5 m	PVC	S55174-A138	ASY6AL50
DC 0...10 V	0		White	7 m	PVC	S55174-A139	ASY6AL70
DC 0...10 V	0		White	2 m	PVC	S55174-A140	ASY6PL20
DC 0...10 V	0		White	5 m	PVC	S55174-A141	ASY6PL50
DC 0...10 V	0		White	7 m	PVC	S55174-A142	ASY6PL70
DC 0...10 V	0		Black	2 m	PVC	S55174-A146	ASY6PL20B
DC 0...10 V	0		White	2 m	Halogen-free	S55174-A150	ASY6PL20HF
DC 0...10 V	0		White	5 m	Halogen-free	S55174-A151	ASY6PL50HF
DC 0...10 V	0		White	7 m	Halogen-free	S55174-A152	ASY6PL70HF
2-position	1		White	1 m	PVC	S55174-A153	ASA23U10
2-position	1		White	2 m	PVC	S55174-A154	ASA23U20
2-position	0	LED	White	2 m	PVC	S55174-A157	ASY23L20LD
2-position	0	LED	White	5 m	PVC	S55174-A158	ASY23L50LD

Accessories for STA..3

Product Title	Data sheet	Stock No.	Product No.
Adapter for Danfoss RA2000, Plastic	N4884	S55174-A164	AV533
Adapter for Giacomini	N4884	S55174-A165	AV63
Adapter for Vaillant	N2100	BPZ:AV59	**AV59**
Adapter for Pettinaroli M28 x 1.5	N4884	S55174-A166	AV64
Adapter various (5 pieces)	N4884	S55174-A167	AV304
Adapter for valves with M30 x 1.5	N2179	S55174-A159	AV301
Adapter for valves with M28 x 1.5, Comap, Markaryd, Herz	N4884	S55174-A160	AV302
Adapter for valves with M30 x 1, TA	N4884	S55174-A161	AV303

NEW PRODUCT

Actuators for globe and pressure independent combi valves
Positioning force 100 N: STP..3

STP..3

Electrothermal actuators with and without connecting cable for small valves

Electrothermal actuators with and without connecting cable for:
- Small valves V..P47..
- Valves of other manufacturers

Actuators without connecting cable can be equipped with:
- Connecting cable up to 15 m, also halogen-free
- Connecting cable with LED operation indicator
- Connecting cable with auxiliary switch or DC 0...10 V module

Data sheet	N4884
Stroke	4.5 mm
Degree of protection	IP54
Mounting position	Any, 360°
Power consumption	2.5 W

Range overview actuators STP..3

Operating voltage	Positioning time [s]	Positioning signal	Cable length [m]	Stock No.	Product No.
AC 230 V	210	2-position	1	S55174-A103	STP23
AC 24 V	30	DC 0...10	1	S55174-A105	STP63
AC 24 V DC 24 V	270	2-position PDM	1	S55174-A102	STP73
AC 230 V	210	2-position		S55174-A112	STP23/00
AC 230 V	210	2-position		S55174-A120	STP23B/00
AC 24 V DC 24 V	270	2-position PDM		S55174-A111	STP73/00
AC 24 V DC 24 V	270	2-position PDM		S55174-A119	STP73B/00
AC 24 V DC 24 V	270	2-position PDM/parallel opera-tion		S55174-A116	STP73PR/00

The given positioning time is related to the maximum stoke of 4.5 mm.

NEW PRODUCT

Connection cable for STP..3

For suitable combination of actuator STP.. and connection cable ASY.., see chapter introduction page 7-4.

Positioning signal	Auxiliary switch	Display	Color	Cable length	Material	Stock No.	Product No.
2-position	0		White	0.8 m	PVC	S55174-A121	ASY23L08
2-position	0		White	1 m	PVC	S55174-A122	ASY23L10
2-position	0		White	2 m	PVC	S55174-A123	ASY23L20
2-position	0		White	3 m	PVC	S55174-A124	ASY23L30
2-position	0		White	4 m	PVC	S55174-A125	ASY23L40
2-position	0		White	5 m	PVC	S55174-A126	ASY23L50
2-position	0		White	6 m	PVC	S55174-A127	ASY23L60
2-position	0		White	7 m	PVC	S55174-A128	ASY23L70
2-position	0		White	10 m	PVC	S55174-A129	ASY23L100
2-position	0		White	15 m	PVC	S55174-A130	ASY23L150
2-position	0		Black	3 m	PVC	S55174-A131	ASY23L30B
2-position	0		Black	5 m	PVC	S55174-A132	ASY23L50B
2-position	0		Black	10 m	PVC	S55174-A133	ASY23L100B
2-position	0		White	2 m	Halogen-free	S55174-A134	ASY23L20HF
2-position	0		White	5 m	Halogen-free	S55174-A135	ASY23L50HF
2-position	0		White	10 m	Halogen-free	S55174-A136	ASY23L100HF
DC 0...10 V	0		White	2 m	PVC	S55174-A137	ASY6AL20
DC 0...10 V	0		White	5 m	PVC	S55174-A138	ASY6AL50
DC 0...10 V	0		White	7 m	PVC	S55174-A139	ASY6AL70
DC 0...10 V	0		White	2 m	PVC	S55174-A140	ASY6PL20
DC 0...10 V	0		White	5 m	PVC	S55174-A141	ASY6PL50
DC 0...10 V	0		White	7 m	PVC	S55174-A142	ASY6PL70
DC 0...10 V	0		Black	2 m	PVC	S55174-A146	ASY6PL20B
DC 0...10 V	0		White	2 m	Halogen-free	S55174-A150	ASY6PL20HF
DC 0...10 V	0		White	5 m	Halogen-free	S55174-A151	ASY6PL50HF
DC 0...10 V	0		White	7 m	Halogen-free	S55174-A152	ASY6PL70HF
2-position	1		White	1 m	PVC	S55174-A155	ASP23U10
2-position	1		White	2 m	PVC	S55174-A156	ASP23U20
2-position	0	LED	White	2 m	PVC	S55174-A157	ASY23L20LD
2-position	0	LED	White	5 m	PVC	S55174-A158	ASY23L50LD

NEW PRODUCT

Actuators for globe and pressure independent combi valves
Positioning force 100 N: STP..3

Accessories for STP..3

Product Title	Data sheet	Stock No.	Product No.
Adapter for Danfoss RA2000, Plastic	N4884	S55174-A164	AV533
Adapter for Giacomini	N4884	S55174-A165	AV63
Adapter for Vaillant	N2100	BPZ:AV59	**AV59**
Adapter for Pettinaroli M28 x 1.5	N4884	S55174-A166	AV64
Adapter various (5 pieces)	N4884	S55174-A167	AV304
Adapter for valves with M30 x 1.5	N2179	S55174-A159	AV301
Adapter for valves with M28 x 1.5, Comap, Markaryd, Herz	N4884	S55174-A160	AV302
Adapter for valves with M30 x 1, TA	N4884	S55174-A161	AV303

Electromotoric actuators 135 N for small valves V..P47..

SFP21../SFP71..

For small valves VVP47.., VXP47.. and VMP47..

Together with VVP47.., VXP47.. and VMP47.., they offer high-quality on/off control. Versions for AC 24 V and AC 230 V available. For on/off control of terminal units and heating and cooling zones. The actuators offer a low noise level, have a manual lever, power fail reset function (NC valve closed) and 1.8 m connecting cable. 1 auxiliary switch is available as an accessory item. The combination with a 3-port valve is suited for applications requiring tight shutoff in both valve end positions.

Data sheet	N4865
Positioning force	135 N
Positioning signal	2-position
Positioning time	10 s
Stroke	2.5 mm
Degree of protection	IP30
Ambient temperature, operation	1...50 °C
Mounting position	Upright to 85° inclined

For fitting to the valve: Cap nut M30 x 1.5

Range overview actuators SFP..

Operating voltage	Power consumption [VA]	Auxiliary switch	Cable length [m]	Stock No.	Product No.
AC 230 V	9.8	Optional	1.8	BPZ:SFP21/18	**SFP21/18**
AC 24 V	9.8	Optional	1.8	BPZ:SFP71/18	**SFP71/18**

Auxilary switch: Changeover contact AC 250 V, 3 A res., 2 A ind., adjustable switching point 50 %

Accessories for SFP21../SFP71..

Product Title	Data sheet	Stock No.	Product No.
Auxiliary switch for SFA21.../ SFA71.../ SFP21.../ SFP71...	N4863	BPZ:ASC2.1/18	**ASC2.1/18**

Actuators for globe and pressure independent combi valves
Positioning force 160 N: SSA31.04

SSA31.04

Electromotoric actuator, 160 N, 2.5 mm, 1.5 m, AC 230 V, 3P, SPDT

For V..I46.. zone valves

Electromotoric actuators for 3-position or SPDT control of zone valves V..I46.. with internally threaded connections. For 3-position or SPDT (open/close) control of heating systems, domestic hot water storage tank charging as well as terminal units and zones. The actuators have automatic stroke adaption, force-dependent switching off in the end positions, position indication, manual control and 1.5 m connecting cable.
Not suitable for radiator valves (soft seal).

Data sheet	N4860
Positioning force	160 N
Operating voltage	AC 230 V
Positioning signal	3-position SPDT
Positioning time	43 s
Power consumption	6 VA
Stroke	2.5 mm
Cable length	1.5 m
Degree of protection	IP40
Ambient temperature, operation	1...50 °C
Mounting position	Upright to 90° inclined

For fitting to the valve: Cap nut M30 x 1.5

	Stock No.	Product No.
	BPZ:SSA31.04	**SSA31.04**

7

Accessories for SSA31.04

Product Title	Data sheet	Stock No.	Product No.
Retaining screw for cable connector		BPZ:ASY98	**ASY98**

Electromotoric actuator, 150 N, 1.5 m, AC 230 V, 2P

SUA21/1

Electromotoric actuators without spring return for V..I46.. zone valves. Primarily used in heating, ventilation and air conditioning systems for water-based control of hot water and cold water.

- Heating and cooling zones
- Control valves for fan coil units
- Zone valve for floor heating via heating distributors (manifolds)
- Chilled ceiling units
- On/off control for domestic hot water boilers
- Shut off valve for wall mounted boiler applications

Data sheet	N4830
Positioning force	150 N
Stroke	2.5 mm
Degree of protection	IP40
Ambient temperature, operation	1...50 °C
Mounting position	Upright to 85 ° horizontal, do not suspend

For fitting to the valve: plastic union nut M30 x 1.5

Range overview SUA..

Operating voltage	Power consumption [VA]	Positioning signal	Positioning time [s]	Cable length [m]	Stock No.	Product No.
AC 230 V	6 VA @ 50 Hz	2-position (SPST)	10 s @ 50 Hz	1.5	S55176-A102	**SUA21/1**

Positioning signal: SPST Single pole single throw, requires change-over contact, i.e. three wires.

Actuators for globe and pressure independent combi valves
Positioning force 160 N: SSP..

SSP..

Electromotoric actuators 160 N for valves with 2.5 mm stroke

- For small valves VVP47.., VXP47.. and VMP47..
- For retrofitting the small valves 2W.., 3W.. and 4W.. with adapter AL100.

Electromotoric actuators for modulating or 3-position control of small valves for terminal units and heating and cooling zones. With position indication, manual control, automatic stroke adaption, force-dependent switching off in the end positions and plug-in type connecting cable.

Data sheet	N4864
Positioning force	160 N
Stroke	2.5 mm
Degree of protection	IP40
Ambient temperature, operation	1...50 °C
Mounting position	Upright to 90° inclined

For fitting to the valve: Cap nut M30 x 1.5.
SSP81.., SSP61.. are CE, C-tick, UL and cUL listed.

Range overview SSP.. actuators

Operating voltage	Power consumption [VA]	Positioning signal	Positioning time [s]	Cable length [m]	Stock No.	Product No.
AC 230 V	6	3-position	150	1.5	BPZ:SSP31	**SSP31**
AC 24 V DC 24 V	2.5	DC 0...10 V	34	1.5	BPZ:SSP61	**SSP61**
AC 24 V	0.8	3-position	150	1.5	BPZ:SSP81	**SSP81**
AC 24 V	0.8	3-position	43	1.5	BPZ:SSP81.04	**SSP81.04**
AC 230 V	6	3-position	150		BPZ:SSP31/00	**SSP31/00**
AC 24 V DC 24 V	2.5	DC 0...10 V	34		BPZ:SSP61/00	**SSP61/00**
AC 24 V	0.8	3-position	150		BPZ:SSP81/00	**SSP81/00**
AC 24 V	0.8	3-position	43		BPZ:SSP81.04/00	**SSP81.04/00**

Positioning time for 2.5 mm stroke
SSP../00: Cable selection see accessories for SSP..

Accessories for SSP..

Product Title	Stock No.	Product No.
Connecting cable 1.5 m, 3-position, AC 230 V	BPZ:ASY3L15	**ASY3L15**
Connecting cable 2.5 m, 3-position, AC 230 V	BPZ:ASY3L25	**ASY3L25**
Connecting cable 4.5 m, 3-position, AC 230 V	BPZ:ASY3L45	**ASY3L45**
Connecting cable 1.5 m, DC 0...10 V, AC/DC 24 V	BPZ:ASY6L15	**ASY6L15**
Connecting cable 2.5 m, DC 0...10 V, AC/DC 24 V	BPZ:ASY6L25	**ASY6L25**
Connecting cable 4.5 m, DC 0..10 V, AC/DC 24 V	BPZ:ASY6L45	**ASY6L45**
Connecting cable 4.5 m, DC 0...10 V, AC/DC 24 V, halogen-free, VDE 0207-24	BPZ:ASY6L45HF	**ASY6L45HF**
Connecting cable 1.5 m, 3-position, AC 24 V	BPZ:ASY8L15	**ASY8L15**
Connecting cable 2.5 m, 3-position, AC 24 V	BPZ:ASY8L25	**ASY8L25**
Connecting cable 4.5 m, 3-position, AC 24 V	BPZ:ASY8L45	**ASY8L45**
Connecting cable 4.5 m, 3-position, AC 24 V, halogen-free, VDE 0207-24	BPZ:ASY8L45HF	**ASY8L45HF**
Retaining screw for cable connector	BPZ:ASY98	**ASY98**
Terminal block connector 3 position, AC 24 V for SSA81../SSB81../SSD81../SSP81..	BPZ:ASY99	**ASY99**
Terminal block connector DC0...10 V, AC 24 V for SSA61../SSB61../SSP61../SSD61..	BPZ:ASY100	**ASY100**
Retrofit adapter for installed 2W..., 3W..., 4W... valves	BPZ:AL100	**AL100**

Accessories for SSP.. (N4864), SSA.. (N4893), SSB.. (N4891) and SSD.. (N4861)

Actuators for globe and pressure independent combi valves
Positioning force 200 N: SFA21.. / SFA71..

SFA21.. / SFA71..

Electromotoric actuators 200 N for small valves V..I46..and Combi valves V..P46..

For V..I46.. zone valves and V..P46.. Combi valves, AC 24 V and AC 230 V versions.

Electromotoric actuators for on/off control of zone and Combi valves. For on/off control of terminal units and heating and cooling zones. The actuators are equipped with a manual lever, spring return facility (NO valve closed) and 1.8 m connecting cable. 1 auxiliary switch is available as an accessory item.

Data sheet	N4863
Positioning force	200 N
Positioning signal	2-position
Positioning time	10 s
Stroke	2.5 mm
Degree of protection	IP30
Ambient temperature, operation	1...50 °C
Mounting position	Upright to 85° inclined
Auxiliary switch	1

For fitting to the valve: Cap nut M30 x 1.5

Range overview actuators SFA..

Operating voltage [V]	Power consumption [VA]	Auxiliary switch	Cable length [m]	Stock No.	Product No.
AC 230	12	Optional	1.8	BPZ:SFA21/18	**SFA21/18**
AC 24	12	Optional	1.8	BPZ:SFA71/18	**SFA71/18**
AC 230	12	Optional		BPZ:SFA21	**SFA21**

Auxilary switch: Changeover contact AC 250 V, 3 A res., 2 A ind., adjustable switching point 50 %

Auxiliary switch for actuators SFA..

Product Title	Data sheet	Stock No.	Product No.
Auxiliary switch for SFA21.../ SFA71.../ SFP21.../ SFP71...	N4863	BPZ:ASC2.1/18	**ASC2.1/18**

Electromotoric actuators 200 N for valves with 5.5 mm stroke

SSB..

For small valves V..P45..

Electromotoric actuators for modulating or 3-position control of small valves for terminal units and chilled ceilings. With position indication, manual control and plug-in type connecting cable 1.5 m. Automatic stroke adaption and force-dependent switching off in the end position.

Data sheet	N4891
Positioning force	200 N
Stroke	5.5 mm
Degree of protection	IP40
Ambient temperature, operation	1...50 °C
Mounting position	Upright to 90° inclined
Medium temperature	1...110 °C

For fitting to the valve: Cap nut G¾"
SSB61.., SSB81.. are CE, C-tick, UL and cUL listed.

Range overview SSB..

Operating voltage	Power consumption [VA]	Positioning signal	Positioning time [s]	Auxiliary switch	Cable length [m]	Stock No.	Product No.
AC 230 V	6	3-position	150	0	1.5	BPZ:SSB31	**SSB31**
AC 24 V	0.8	3-position	150	0	1.5	BPZ:SSB81	**SSB81**
AC 24 V DC 24 V	2.5	DC 0...10 V	75	0	1.5	BPZ:SSB61	**SSB61**
AC 230 V	6	3-position	150	1	1.5	BPZ:SSB31.1	**SSB31.1**
AC 24 V	0.8	3-position	150	1	1.5	BPZ:SSB81.1	**SSB81.1**
AC 230 V	6	3-position	150	0		BPZ:SSB31/00	**SSB31/00**
AC 24 V	0.8	3-position	150	0		BPZ:SSB81/00	**SSB81/00**
AC 24 V DC 24 V	2.5	DC 0...10 V	75	0		BPZ:SSB61/00	**SSB61/00**

Auxilary switch: Changeover contact AC 250 V, 1 A res., 0.5 A ind., adjustable switching point 0...100 %
SSB../00: Cable selection see accessories for SSB..

Actuators for globe and pressure independent combi valves
Positioning force 200 N: SSB..

Accessories for SSB..

Product Title	Stock No.	Product No.
Connecting cable 1.5 m, 3-position, AC 230 V	BPZ:ASY3L15	**ASY3L15**
Connecting cable 2.5 m, 3-position, AC 230 V	BPZ:ASY3L25	**ASY3L25**
Connecting cable 4.5 m, 3-position, AC 230 V	BPZ:ASY3L45	**ASY3L45**
Connecting cable 1.5 m, DC 0...10 V, AC/DC 24 V	BPZ:ASY6L15	**ASY6L15**
Connecting cable 2.5 m, DC 0...10 V, AC/DC 24 V	BPZ:ASY6L25	**ASY6L25**
Connecting cable 4.5 m, DC 0..10 V, AC/DC 24 V	BPZ:ASY6L45	**ASY6L45**
Connecting cable 4.5 m, DC 0...10 V, AC/DC 24 V, halogen-free, VDE 0207-24	BPZ:ASY6L45HF	**ASY6L45HF**
Connecting cable 1.5 m, 3-position, AC 24 V	BPZ:ASY8L15	**ASY8L15**
Connecting cable 2.5 m, 3-position, AC 24 V	BPZ:ASY8L25	**ASY8L25**
Connecting cable 4.5 m, 3-position, AC 24 V	BPZ:ASY8L45	**ASY8L45**
Connecting cable 4.5 m, 3-position, AC 24 V, halogen-free, VDE 0207-24	BPZ:ASY8L45HF	**ASY8L45HF**
Retaining screw for cable connector	BPZ:ASY98	**ASY98**
Terminal block connector 3 position, AC 24 V for SSA81../SSB81../SSD81../SSP81..	BPZ:ASY99	**ASY99**
Terminal block connector DC0...10 V, AC 24 V for SSA61../SSB61../SSP61../SSD61..	BPZ:ASY100	**ASY100**

Accessories for SSP.. (N4864), SSA.. (N4893), SSB.. (N4891) and SSD.. (N4861)

Electromotoric actuators 250 N for combi valves VPI45..

SSD..

Electromotoric actuators for modulating or 3-position control of combi valves VPI45.. for water-side control of hot and cooling water in heating, ventilation and air conditioning systems. With position indication, manual control and plug-in type connecting cables.
Available are actuators types for modulating control DC 0/2...10 V and DC 0...10 V (SSD61EP) for equal-percentage valve characteristic.

Data sheet	N4861

Positioning force	250 N
Stroke	5.5 mm
Degree of protection	IP40
Ambient temperature, operation	1...50 °C
Medium temperature	1...110 °C
Mounting position	Upright to 90° inclined

For fitting to the valve: Cap nut M30 x 1.5.
SSD81.., SSD61.. are CE, C-tick, UL and cUL listed.
The types SSD61.5 and SSD81.5 have the same housing and dimensions as the SSC.. actuators.

Range overview actuators SSD..

Operating voltage	Power consumption [VA]	Positioning signal	Positioning time [s]	Cable length [m]	Stock No.	Product No.
AC 230 V	6	3-position	150	1.5	BPZ:SSD31	**SSD31**
AC 24 V DC 24 V	2.5	DC 0...10 V	75	1.5	BPZ:SSD61	**SSD61**
AC 24 V DC 24 V	2.5	DC 2...10 V	75	1.5	BPZ:SSD61.2	**SSD61.2**
AC 24 V DC 24 V	2.5	DC 0...10 V	75	1.5	BPZ:SSD61EP	**SSD61EP**
AC 24 V	0.8	3-position	150	1.5	BPZ:SSD81	**SSD81**
AC 230 V	6	3-position	150		BPZ:SSD31/00	**SSD31/00**
AC 24 V DC 24 V	2.5	DC 0...10 V	75		BPZ:SSD61/00	**SSD61/00**
AC 24 V DC 24 V	2.5	DC 2...10 V	75		BPZ:SSD61.2/00	**SSD61.2/00**
AC 24 V DC 24 V	2.5	DC 0...10 V	75		BPZ:SSD61EP/00	**SSD61EP/00**
AC 24 V	0.8	3-position	150		BPZ:SSD81/00	**SSD81/00**

SSD../00: Cable selection see accessories for SSD..
SSD61EP.. for equal-percentage valve characteristics

Range overview actuators SSD...5

The SSD61.5 and SSD81.5 have the same housing and dimension like the SSC.. actuator

Operating voltage	Power consumption [VA]	Positioning signal	Positioning time [s]	Spring return function	Cable length [m]	Stock No.	Product No.
AC 24 V DC 24 V	3	DC 0...10 V	30	15 s	1.5	BPZ:SSD61.5	SSD61.5
AC 24 V DC 24 V	2	3-position	150	15 s	1.5	BPZ:SSD81.5	SSD81.5

NEW PRODUCT

Actuators for globe and pressure independent combi valves
Positioning force 250 N: SSD..

Accessories for SSD..

Product Title	Stock No.	Product No.
Connecting cable 1.5 m, 3-position, AC 230 V	BPZ:ASY3L15	**ASY3L15**
Connecting cable 2.5 m, 3-position, AC 230 V	BPZ:ASY3L25	**ASY3L25**
Connecting cable 4.5 m, 3-position, AC 230 V	BPZ:ASY3L45	**ASY3L45**
Connecting cable 1.5 m, DC 0...10 V, AC/DC 24 V	BPZ:ASY6L15	**ASY6L15**
Connecting cable 2.5 m, DC 0...10 V, AC/DC 24 V	BPZ:ASY6L25	**ASY6L25**
Connecting cable 4.5 m, DC 0..10 V, AC/DC 24 V	BPZ:ASY6L45	**ASY6L45**
Connecting cable 4.5 m, DC 0...10 V, AC/DC 24 V, halogen-free, VDE 0207-24	BPZ:ASY6L45HF	**ASY6L45HF**
Connecting cable 1.5 m, 3-position, AC 24 V	BPZ:ASY8L15	**ASY8L15**
Connecting cable 2.5 m, 3-position, AC 24 V	BPZ:ASY8L25	**ASY8L25**
Connecting cable 2.5 m, 3-position, AC 24 V, with Batigyr connector	BPZ:ASY8L25B	**ASY8L25B**
Connecting cable 4.5 m, 3-position, AC 24 V	BPZ:ASY8L45	**ASY8L45**
Connecting cable 4.5 m, 3-position, AC 24 V, halogen-free, VDE 0207-24	BPZ:ASY8L45HF	**ASY8L45HF**
Retaining screw for cable connector	BPZ:ASY98	**ASY98**
Terminal block connector 3 position, AC 24 V for SSA81../SSB81../SSD81../SSP81..	BPZ:ASY99	**ASY99**
Terminal block connector DC0...10 V, AC 24 V for SSA61../SSB61../SSP61../SSD61..	BPZ:ASY100	**ASY100**

Accessories for SSP.. (N4864), SSA.. (N4893), SSB.. (N4891) and SSD.. (N4861)

Electromotoric actuators 250 N for valves VVP45..N

SSY..

For operation of Siemens valves VVP45..N for water-side control of hot and cooling water in heating, ventilation and air conditioning systems.

Data sheet	N4894
Positioning force	250 N
Stroke	5.5 mm
Degree of protection	IP40
Ambient temperature, operation	1...50 °C
Mounting position	Upright to 90° inclined
Medium temperature	1...110 °C

For fitting to the valve: Cap nut G¾.
SSY81 is CE, C-tick, UL and cUL listed.

Range overview actuators SSY..

Operating voltage	Power consumption [VA]	Positioning signal	Positioning time [s]	Cable length [m]	Stock No.	Product No.
AC 230 V	6	3-position	150	1.5	BPZ:SSY31	**SSY31**
AC 24 V	0.8	3-position	150	1.5	BPZ:SSY81	**SSY81**

Accessories for SSY..

Product Title	Data sheet	Stock No.	Product No.
Retaining screw for cable connector		BPZ:ASY98	**ASY98**

7

Actuators for globe and pressure independent combi valves
Positioning force 300 N: SSC..

SSC..

Electromotoric actuators 300 N for valves with 5.5 mm stroke

Manual control with automatic reset to control mode. Overload-proof through force-dependent switching off in the end position. With plastic housing and cap nut for fitting on threaded valves with 5.5 mm stroke.

Data sheet	N4895
Positioning force	300 N
Stroke	5.5 mm
Degree of protection	IP40
Ambient temperature, operation	5...50 °C
Medium temperature	1...110 °C
Mounting position	Upright to horizontal

SSC81.., SSC61.., SSC61.5 are CE, UL, cUL and C-TIC listed

Range overview SSC31/SSC61/SSC81

Operating voltage	Positioning signal	Power consumption [VA]	Positioning time [s]	Spring return function	Stock No.	Product No.
AC 24 V	3-position	0.8	150	No	BPZ:SSC81	**SSC81**
AC 24 V DC 24 V	DC 0...10 V	2	30	No	BPZ:SSC61	**SSC61**
AC 24 V DC 24 V	DC 0...10 V	2	30	Yes (15 s)	BPZ:SSC61.5	**SSC61.5**
AC 230 V	3-position	6	150	No	BPZ:SSC31	**SSC31**

SSC61.5: Power consumption when connecting power for the first time 3 VA

Accessories for SSC..

Product Title	Data sheet	Stock No.	Product No.
Adapter to upgrade older Landis&Gyr valves	N4573	BPZ:ASK30	**ASK30**

Electromotoric actuators for threaded valves with a stroke of 5.5 mm

SQS..

Manual control with automatic reset to control mode. Overload-proof through force-dependent switching off in the end position. With plastic housing and cap nut for fitting on threaded valves with a stroke of 5.5 mm.

Data sheet	N4573
Positioning force	400 N
Stroke	5.5 mm
Spring return function	SQS35.50, SQS35.53, SQS65.5
Degree of protection	IP54
Ambient temperature, operation	-5...50 °C
Medium temperature	1...130 °C
Mounting position	Upright to horizontal
Position feedback	DC 0...10 V (SQS65..)

Range overview SQS35.. /SQS65../SQS85..

Operating voltage	Positioning signal	Power consumption [VA]	Positioning time [s]	Spring return function	Stock No.	Product No.
AC 230 V	3-position	2.5	150	No	BPZ:SQS35.00	**SQS35.00**
AC 230 V	3-position	3.5	35	No	BPZ:SQS35.03	**SQS35.03**
AC 230 V	3-position	5	150	Yes (8 s)	BPZ:SQS35.50	**SQS35.50**
AC 230 V	3-position	6	35	Yes (8 s)	BPZ:SQS35.53	**SQS35.53**
AC 24 V	DC 0...10 V 0...1000 Ohm	4.5	35	No	BPZ:SQS65	**SQS65**
AC 24 V	DC 2...10 V 0...1000 Ohm	4.5	35	No	BPZ:SQS65.2	**SQS65.2**
AC 24 V	DC 0...10 V 0...1000 Ohm	7	35	Yes (8 s)	BPZ:SQS65.5	**SQS65.5**
AC 24 V	3-position	2	150	No	BPZ:SQS85.00	**SQS85.00**
AC 24 V	3-position	2	35	No	BPZ:SQS85.03	**SQS85.03**

Actuators with spring-return function have a position indication in place of the manual control lever.
Actuators SQS65 and SQS65.5 are UL-listed (only 60 Hz); type suffix U, e.g. SQS65U.

Accessories for SQS35../SQS85..

Product Title	Data sheet	Stock No.	Product No.
Auxiliary switch for SQS35../85.., SQD35../85..	N4573	BPZ:ASC9.6	**ASC9.6**
Adapter to upgrade older Landis&Gyr valves	N4573	BPZ:ASK30	**ASK30**

Actuators for globe and pressure independent combi valves
Positioning force 400 N: SQD..

SQD..

Electromotoric actuators 400 N für Combi valves

For operation of Siemens Combi valves VPI45.., DN40/50 with 6.5 mm stroke for water-side control of low temperature hot water and cooling water in heating, ventilation and air conditioning systems. Manual control with automatic reset to control mode. Overload-proof through force-dependent switching off in the end position.

Data sheet	N4540
Positioning force	400 N
Stroke	6.5 mm
Degree of protection	IP54
Ambient temperature, operation	-5...50 °C
Medium temperature	1...120 °C
Mounting position	Upright to horizontal
Position feedback	DC 0...10 V (SQD65)

For fitting to the valve: Cap nut M30 x 1.5.

Range overview actuators SQD..

Operating voltage	Power consumption [VA]	Positioning signal	Positioning time [s]	Stock No.	Product No.
AC 230 V	2.5	3-position	170	BPZ:SQD35.00	**SQD35.00**
AC 24 V	4.5	DC 0...10 V 0...1000 Ohm	43	BPZ:SQD65	**SQD65**
AC 24 V	2	3-position	43	BPZ:SQD85.03	**SQD85.03**

7

Accessories for SQD..

Product Title	Data sheet	Stock No.	Product No.
Auxiliary switch for SQS35../85.., SQD35../85..	N4573	BPZ:ASC9.6	**ASC9.6**

Electromotoric actuators 800 N for valve with 20 mm stroke

SAX..

Electromotoric actuator for the operation of Siemens 2-port and 3-port valves, types VVF.., VVG.., VXF.. and VXG.. with 20 mm stroke as control and safety shut-off valves in heating, ventilation and air conditioning systems.
With manual adjuster and position indicator, status indication per LED.
Optional functions with auxiliary switches, potentiometer, functional module and stem heater.

SA..81.., SA..61.. are UL listed.

Data sheet	N4501
Positioning force	800 N
Stroke	20 mm
Degree of protection	IP54
Ambient temperature, operation	-15...55 °C
Medium temperature	-25...150 °C
Mounting position	Upright to horizontal
Position feedback	DC 0...10 V (SA..6..)

Range overview SAX31../61../81..

Operating voltage	Positioning signal	Power consumption [VA]	Positioning time [s]	Stock No.	Product No.
AC 230 V	3-position	3.5	120	S55150-A105	**SAX31.00**
AC 230 V	3-position	8	30	S55150-A106	**SAX31.03**
AC 24 V DC 24 V	DC 0...10 V DC 4...20 mA 0...1000 Ohm	8	30	S55150-A100	**SAX61.03**
AC 24 V DC 24 V	3-position	3.5	120	S55150-A102	**SAX81.00**
AC 24 V DC 24 V	3-position	8	30	S55150-A103	**SAX81.03**

Accessories for actuators SAX..

Product Title	Data sheet	Stock No.	Product No.
Auxiliary switch for SA..31../SA..61../SA..81..	N4501	S55845-Z103	**ASC10.51**
Potentiometer 0...1000 Ohm for SA..31../SA..81..	N4501	S55845-Z106	**ASZ7.5/1000**
Potentiometer 0...200 Ohm for SA..31../SA..81..	N4501	S55845-Z105	**ASZ7.5/200**
Potentiometer 0...135 Ohm for SA..31../SA..81..	N4501	S55845-Z104	**ASZ7.5/135**
Funtion module for SA..61.., sequence control/changeover of acting direction	N4501	S55845-Z107	**AZX61.1**
Stem heating element for media < 0 °C	N4501	S55845-Z108	**ASZ6.6**
Weathershield for SAX../SAL..	N4501	S55845-Z109	**ASK39.1**

Actuators for globe and pressure independent combi valves
Electromotoric, positioning force 700 N: SBX..

SBX..

Electromotoric actuators for seat valves

For operation with Siemens 2-port and 3-port valves, types VVF47.., VXF47.. with 20 and 40 mm stroke as control valves in heating, ventilation and air conditioning systems

Data sheet	N4519
Positioning force	700 N
Stroke	20 mm
Degree of protection	IP54
Ambient temperature, operation	-10...55 °C
Medium temperature	1...95 °C
Mounting position	Upright to horizontal

Range overview SBX..

Operating voltage	Positioning signal	Power consumption [VA]	Positioning time [s]	Stock No.	Product No.
AC 230 V	3-position	9	120	S55160-A102	SBX31
AC 24 V	DC 0...10 V	5	120	S55160-A100	SBX61
AC 24 V	3-position	4	120	S55160-A101	SBX81

Accessories for SBX..

Product Title	Data sheet	Stock No.	Product No.
Function Module	N4519	S55845-Z120	AZX420

Actuators for globe and pressure independent combi valves
Electromotoric, positioning force 1600 N: SBV..

Electromotoric actuators for seat valves

SBV..

For operation with Siemens 2-port and 3-port valves, types VVF47.., VXF47.. with 20 and 40 mm stroke as control valves in heating, ventilation and air conditioning systems

Data sheet	N4519
Positioning force	1600 N
Stroke	40 mm
Degree of protection	IP54
Ambient temperature, operation	-10...55 °C
Medium temperature	1...95 °C
Mounting position	Upright to horizontal

Range overview SBV..

Operating voltage	Positioning signal	Power consumption [VA]	Positioning time [s]	Stock No.	Product No.
AC 230 V	3-position	9	180	S55160-A105	SBV31
AC 24 V	DC 0...10 V	7	180	S55160-A103	SBV61
AC 24 V	3-position	7	180	S55160-A104	SBV81

Accessories for SBV..

Product Title	Data sheet	Stock No.	Product No.
Function Module	N4519	S55845-Z120	AZX420

NEW PRODUCT

Actuators for globe and pressure independent combi valves
Electrohydraulic, positioning force 1000 N: SKD..

SKD32../SKD82..

Electrohydraulic actuators 1000 N for valves with 20 mm stroke

Overload-proof through travel-dependent, fixed switching off in end position. With die-cast aluminium housing and yoke for valves with 20 mm stroke. Optional functions: one auxiliary switch or one potentiometer. With manual control.

Data sheet	N4561
Positioning force	1000 N
Stroke	20 mm
Spring return function	SKD32.21, SKD32.51, SKD82.51
Degree of protection	IP54
Ambient temperature, operation	-15...50 °C
Medium temperature	-25...150 °C
Mounting position	Upright to horizontal

Range overview SKD32../SKD82..

Operating voltage	Positioning signal	Power consumption [VA]	Positioning time [s]	Spring return function	Stock No.	Product No.
AC 230 V	3-position	20	Open 30 Close 10	Yes (8 s)	BPZ:SKD32.21	**SKD32.21**
AC 230 V	3-position	16	120	No	BPZ:SKD32.50	**SKD32.50**
AC 230 V	3-position	21	120	Yes (8 s)	BPZ:SKD32.51	**SKD32.51**
AC 24 V	3-position	13	120	No	BPZ:SKD82.50	**SKD82.50**
AC 24 V	3-position	18	120	Yes (8 s)	BPZ:SKD82.51	**SKD82.51**
AC 24 V	3-position	13	120	No	BPZ:SKD82.50U	**SKD82.50U**
AC 24 V	3-position	18	120	Yes (8 s)	BPZ:SKD82.51U	**SKD82.51U**

Actuators SKD 82.50U and SKD82.51U are UL-listed.

SKD60/SKD62..

Electrohydraulic actuators 1000 N for valves with 20 mm stroke

Overload-proof through travel-dependent, electronic switching off in end position. With die-cast aluminium housing and yoke for valves with 20 mm stroke. Optional function with one auxiliary switch. With manual control.

Data sheet	N4561
Positioning force	1000 N
Stroke	20 mm
Spring return function	SKD62..
Degree of protection	IP54
Ambient temperature, operation	-15...50 °C
Medium temperature	-25...150 °C
Mounting position	Upright to horizontal
Position feedback	DC 0...10 V DC 4...20 mA

Range overview SKD60/SKD62..

Operating voltage	Positioning signal	Power consumption [VA]	Positioning time [s]	Spring return function	Stock No.	Product No.
AC 24 V	DC 0...10 V DC 4...20 mA 0...1000 Ohm	17	Open 30 Close 15	No	BPZ:SKD60	**SKD60**
AC 24 V	DC 0...10 V DC 4...20 mA 0...1000 Ohm	17	Open 30 Close 15	Yes (15 s)	BPZ:SKD62	**SKD62**
AC 24 V	DC 0...10 V DC 4...20 mA 0...1000 Ohm	17	Open 30 Close 15	Yes (15 s)	BPZ:SKD62U	**SKD62U**
AC 24 V	DC 0...10 V DC 4...20 mA 0...1000 Ohm	17	Open 30 Close 15	Yes (15 s)	BPZ:SKD62UA	**SKD62UA**

Actuators with type suffix ..U /..UA are UL-listed. Actuators type ..UA provide additional functions: Signal inversion, stroke limitation, and adjustable starting point and operating range.

Actuators for globe and pressure independent combi valves
Electrohydraulic, positioning force 2800 N: SKB..

SKB32../SKB82..

Electrohydraulic actuators 2800 N for valves with 20 mm stroke

Overload-proof through travel-dependent, fixed switching off in end position. With die-cast aluminium housing and yoke for valves with 20 mm stroke. Optional functions: one auxiliary switch or one potentiometer. With manual control.

Data sheet	N4564
Positioning force	2800 N
Stroke	20 mm
Spring return function	SKB32.51, SKB82.51
Degree of protection	IP54
Ambient temperature, operation	-15...55 °C
Medium temperature	-25...220 °C (350 °C)
Mounting position	Upright to horizontal

Range overview SKB32../SKB82..

Operating voltage	Positioning signal	Power consumption [VA]	Positioning time [s]	Spring return function	Stock No.	Product No.
AC 230 V	3-position	10	120	No	BPZ:SKB32.50	**SKB32.50**
AC 230 V	3-position	15	120	Yes (10 s)	BPZ:SKB32.51	**SKB32.51**
AC 24 V	3-position	13	120	No	BPZ:SKB82.50	**SKB82.50**
AC 24 V	3-position	18	120	Yes (10 s)	BPZ:SKB82.51	**SKB82.51**
AC 24 V	3-position	13	120	No	BPZ:SKB82.50U	**SKB82.50U**
AC 24 V	3-position	18	120	Yes (10 s)	BPZ:SKB82.51U	**SKB82.51U**

Actuators with type suffix ..U are UL-listed.

7

SKB60/62..

Electrohydraulic actuators 2800 N for valves with 20 mm stroke

Overload-proof through travel-dependent, electronic switching off in end position. With die-cast aluminium housing and yoke for valves with 20 mm stroke. Optional function with one auxiliary switch. With manual control.

Data sheet	N4564
Positioning force	2800 N
Stroke	20 mm
Spring return function	SKB62..
Degree of protection	IP54
Ambient temperature, operation	-15...55 °C
Medium temperature	-25...220 °C (350 °C)
Mounting position	Upright to horizontal
Position feedback	DC 0...10 V DC 4...20 mA

Range overview SKB60/SKB62..

Operating voltage	Positioning signal	Power consumption [VA]	Positioning time [s]	Spring return function	Stock No.	Product No.
AC 24 V	DC 0...10 V 4...20 mA 0...1000 Ohm	18	Open 120 Close 10	No	BPZ:SKB60	**SKB60**
AC 24 V	DC 0...10 V 4...20 mA 0...1000 Ohm	18	Open 120 Close 10	Yes (10 s)	BPZ:SKB62	**SKB62**
AC 24 V	DC 0...10 V 4...20 mA 0...1000 Ohm	18	Open 120 Close 10	Yes (10 s)	BPZ:SKB62U	**SKB62U**
AC 24 V	DC 0...10 V 4...20 mA 0...1000 Ohm	18	Open 120 Close 10	Yes (10 s)	BPZ:SKB62UA	**SKB62UA**

Actuators with type suffix ..U /..UA are UL-listed. Actuators type ..UA provide additional functions: Signal inversion, stroke limitation, and adjustable starting point and operating range.

Actuators for globe and pressure independent combi valves
Electrohydraulic, positioning force 2800 N: SKC..

SKC32../SKC82..

Electrohydraulic actuators 2800 N for valves with 40 mm stroke

Overload-proof through travel-dependent, fixed switching off in end position. With die-cast aluminium housing and yoke for valves with 40 mm stroke. Optional functions: one auxiliary switch or one potentiometer. With manual control.

Data sheet	N4566
Positioning force	2800 N
Stroke	40 mm
Spring return function	SKC32.61, SKC82.61
Degree of protection	IP54
Ambient temperature, operation	-15...55 °C
Medium temperature	-25...220 °C (350 °C)
Mounting position	Upright to horizontal

Range overview SKC32../82..

Operating voltage	Positioning signal	Power consumption [VA]	Positioning time [s]	Spring return function	Stock No.	Product No.
AC 230 V	3-position	19	120	No	BPZ:SKC32.60	**SKC32.60**
AC 230 V	3-position	24	120	Yes (18 s)	BPZ:SKC32.61	**SKC32.61**
AC 24 V	3-position	19	120	No	BPZ:SKC82.60	**SKC82.60**
AC 24 V	3-position	24	120	Yes (18 s)	BPZ:SKC82.61	**SKC82.61**
AC 24 V	3-position	19	120	No	BPZ:SKC82.60U	**SKC82.60U**
AC 24 V	3-position	24	120	Yes (18 s)	BPZ:SKC82.61U	**SKC82.61U**

Actuators with type suffix ..U are UL-listed.

SKC60/SKC62..

Electrohydraulic actuators 2800 N for valves with 40 mm stroke

Overload-proof through travel-dependent, electronic switching off in end position. With die-cast aluminium housing and yoke for valves with 40 mm stroke. Optional function with one auxiliary switch. With manual control.

Data sheet	N4566
Positioning force	2800 N
Stroke	40 mm
Spring return function	SKC62..
Degree of protection	IP54
Ambient temperature, operation	-15...55 °C
Medium temperature	-25...220 °C (350 °C)
Mounting position	Upright to horizontal
Position feedback	DC 0...10 V DC 4...20 mA

Range overview SKC60/SKC62..

Operating voltage	Positioning signal	Power consumption [VA]	Positioning time [s]	Spring return function	Stock No.	Product No.
AC 24 V	DC 0...10 V 4...20 mA 0...1000 Ohm	24	Open 120 Close 20	No	BPZ:SKC60	**SKC60**
AC 24 V	DC 0...10 V 4...20 mA 0...1000 Ohm	28	Open 120 Close 20	Yes (20 s)	BPZ:SKC62	**SKC62**
AC 24 V	DC 0...10 V 4...20 mA 0...1000 Ohm	28	Open 120 Close 20	Yes (20 s)	BPZ:SKC62U	**SKC62U**
AC 24 V	DC 0...10 V 4...20 mA 0...1000 Ohm	28	Open 120 Close 20	Yes (20 s)	BPZ:SKC62UA	**SKC62UA**

Actuators with type suffix ..U /..UA are UL-listed. Actuators type ..UA provide additional functions: Signal inversion, stroke limitation, and adjustable starting point and operating range.

Accessories for actuators SKB.. / SKC.. / SKD..

Product Title	Data sheet	Stock No.	Product No.
Auxiliary switch for SKB6../ SKC6../ SKD6..	N4566	BPZ:ASC1.6	**ASC1.6**
Double auxiliary switch for SKB/ C/ D32../82..	N4561	BPZ:ASC9.3	**ASC9.3**
Stroke inverter for SKD..	N4561	BPZ:ASK50	**ASK50**
Stroke inverter for SKB..	N4564	BPZ:ASK51	**ASK51**
Stem heating element for media < 0 °C		BPZ:ASZ6.5	**ASZ6.5**
Potentiometer 0...1000 Ohm for SKB/ C/ D32../82..	N4564	BPZ:ASZ7.3	**ASZ7.3**
Potentiometer 0...135 Ohm for SKB/ C/ D32../82..	N4564	BPZ:ASZ7.31	**ASZ7.31**
Potentiometer 0...200 Ohm for SKB/ C/ D32../82..	N4564	BPZ:ASZ7.32	**ASZ7.32**

2-port seat valves PN6 with flanged connections

VVF21..

- With flanged connections to ISO 7005
- For chilled, low and high temperature water and brine in closed circuits

Data sheet	N4310
Stroke	From DN 100: 40 mm To DN 80: 20 mm
Leakage rate	0...0.02 % of k_{vs} value
Medium temperature	-10...150 °C
Valve characteristic	Equal percentage
Rangeability	DN 25...40: >50 DN 50...100: >100
Permissible operating pressure	600 kPa
Material, valve body	Cast iron EN-GJL-250/EN-GJL-HB 215
Material, inside set	< DN 40: CrNi steel/brass > DN 50: CrNi steel/Rg5
PN class	PN 6

Range overview 2-port valves VVF21..

SAX.. Δp_{max} [kPa]	SAX.. Δp_s [kPa]	SKD.. Δp_{max} [kPa]	SKD.. Δp_s [kPa]	SKB.. Δp_{max} [kPa]	SKB.. Δp_s [kPa]	SKC.. Δp_{max} [kPa]	SKC.. Δp_s [kPa]	DN	k_{vs} [m³/h]	Stock No.	Product No.
300	600	300	600	300	600			25	1.9	BPZ:VVF21.22	**VVF21.22**
300	600	300	600	300	600			25	2.5	BPZ:VVF21.25-2.5	**VVF21.25-2.5**
300	600	300	600	300	600			25	3	BPZ:VVF21.23	**VVF21.23**
300	600	300	600	300	600			25	4	BPZ:VVF21.25-4	**VVF21.25-4**
300	600	300	600	300	600			25	5	BPZ:VVF21.24	**VVF21.24**
300	600	300	600	300	600			25	6.3	BPZ:VVF21.25-6.3	**VVF21.25-6.3**
300	600	300	600	300	600			25	7.5	BPZ:VVF21.25	**VVF21.25**
300	600	300	600	300	600			25	10	BPZ:VVF21.25-10	**VVF21.25-10**
300	500	300	600	300	600			40	12	BPZ:VVF21.39	**VVF21.39**
300	500	300	600	300	600			40	16	BPZ:VVF21.40-16	**VVF21.40-16**
300	500	300	600	300	600			40	19	BPZ:VVF21.40	**VVF21.40**
300	500	300	600	300	600			40	25	BPZ:VVF21.40-25	**VVF21.40-25**
300	300	300	450	300	600			50	31	BPZ:VVF21.50	**VVF21.50**
300	300	300	450	300	600			50	40	BPZ:VVF21.50-40	**VVF21.50-40**
175	175	275	275	300	600			65	49	BPZ:VVF21.65	**VVF21.65**
175	175	275	275	300	600			65	63	BPZ:VVF21.65-63	**VVF21.65-63**
100	100	175	175	300	500			80	78	BPZ:VVF21.80	**VVF21.80**
100	100	175	175	300	500			80	100	BPZ:VVF21.80-100	**VVF21.80-100**
						200	300	100	124	BPZ:VVF21.90	**VVF21.90**
						200	300	100	160	BPZ:VVF21.100-160	**VVF21.100-160**

Replacement sealing glands for VVF21..:

VVF/VXF21.., DN25...DN80: part no. 4 284 8806 0
VVF/VXF21.., DN100: part no. 4 679 5629 0

Globe and pressure independent combi valves
2-port flanged valves, PN6: VVF21..

Field of application for VVF21..

Medium	Temperature	Operating pressure	Sealing gland
Chilled water Brine Water with anti-freeze Low-temperature hot water	-10...150 °C	6 bar ISO 7005	EPDM O-ring, silicone-free grease

For media < 0°C, stem heating element ASZ6.5 or ASZ6.6 is required.

Combinable actuator to VVF21..

Operating voltage	Positioning signal	Positioning time [s]	Spring return function	Data sheet	Stock No.	Product No.
AC 230 V	3-position	120	no	N4501	S55150-A105	**SAX31.00**
AC 230 V	3-position	30	no	N4501	S55150-A106	**SAX31.03**
AC 24 V DC 24 V	DC 0...10 V DC 4...20 mA 0...1000 Ohm	30	no	N4501	S55150-A100	**SAX61.03**
AC 230 V	3-position	120	No	N4561	BPZ:SKD32.50	**SKD32.50**
AC 230 V	3-position	120	Yes (8 s)	N4561	BPZ:SKD32.51	**SKD32.51**
AC 230 V	3-position	Open 30 Close 10	Yes (8 s)	N4561	BPZ:SKD32.21	**SKD32.21**
AC 24 V	DC 0...10 V DC 4...20 mA 0...1000 Ohm	Open 30 Close 15	No	N4561	BPZ:SKD60	**SKD60**
AC 24 V	DC 0...10 V DC 4...20 mA 0...1000 Ohm	Open 30 Close 15	Yes (15 s)	N4561	BPZ:SKD62	**SKD62**
AC 230 V	3-position	120	No	N4564	BPZ:SKB32.50	**SKB32.50**
AC 230 V	3-position	120	Yes (10 s)	N4564	BPZ:SKB32.51	**SKB32.51**
AC 24 V	DC 0...10 V 4...20 mA 0...1000 Ohm	Open 120 Close 10	No	N4564	BPZ:SKB60	**SKB60**
AC 24 V	DC 0...10 V 4...20 mA 0...1000 Ohm	Open 120 Close 10	Yes (10 s)	N4564	BPZ:SKB62	**SKB62**
AC 230 V	3-position	120	No	N4566	BPZ:SKC32.60	**SKC32.60**
AC 230 V	3-position	120	Yes (18 s)	N4566	BPZ:SKC32.61	**SKC32.61**
AC 24 V	DC 0...10 V 4...20 mA 0...1000 Ohm	Open 120 Close 20	No	N4566	BPZ:SKC60	**SKC60**
AC 24 V	DC 0...10 V 4...20 mA 0...1000 Ohm	Open 120 Close 20	Yes (20 s)	N4566	BPZ:SKC62	**SKC62**

2-port seat valves PN10 with flanged connections

VVF31..

- With flanged connections to ISO 7005
- For chilled, low and high temperature water and brine in closed circuits

Data sheet	N4320
Stroke	From DN 100: 40 mm To DN 80: 20 mm
Leakage rate	0...0.02 % of k_{vs} value
Medium temperature	-10...150 °C
Valve characteristic	Equal percentage
Rangeability	DN 25...40: >50 DN 50...150: >100
Permissible operating pressure	1000 kPa
Material, valve body	Cast iron EN-GJL-250/EN-GJL-HB 215
Material, inside set	< DN 40: CrNi steel/brass > DN 50: CrNi steel/Rg5
PN class	PN 10

Range overview 2-port valves VVF31..

SAX.. Δp_{max} [kPa]	SAX.. Δp_s [kPa]	SKD.. Δp_{max} [kPa]	SKD.. Δp_s [kPa]	SKB.. Δp_{max} [kPa]	SKB.. Δp_s [kPa]	SKC.. Δp_{max} [kPa]	SKC.. Δp_s [kPa]	DN	k_{vs} [m³/h]	Stock No.	Product No.
300	1000	300	1000	300	1000			15	2.5	BPZ:VVF31.15-2.5	**VVF31.15-2.5**
300	1000	300	1000	300	1000			15	4	BPZ:VVF31.15-4	**VVF31.15-4**
300	1000	300	1000	300	1000			25	5	BPZ:VVF31.24	**VVF31.24**
300	1000	300	1000	300	1000			25	6.3	BPZ:VVF31.25-6.3	**VVF31.25-6.3**
300	1000	300	1000	300	1000			25	7.5	BPZ:VVF31.25	**VVF31.25**
300	1000	300	1000	300	1000			25	10	BPZ:VVF31.25-10	**VVF31.25-10**
300	525	300	775	300	1000			40	12	BPZ:VVF31.39	**VVF31.39**
300	525	300	775	300	1000			40	16	BPZ:VVF31.40-16	**VVF31.40-16**
300	525	300	775	300	1000			40	19	BPZ:VVF31.40	**VVF31.40**
300	525	300	775	300	1000			40	25	BPZ:VVF31.40-25	**VVF31.40-25**
300	325	300	475	300	1000			50	31	BPZ:VVF31.50	**VVF31.50**
300	325	300	475	300	1000			50	40	BPZ:VVF31.50-40	**VVF31.50-40**
175	175	275	275	300	750			65	49	BPZ:VVF31.65	**VVF31.65**
175	175	275	275	300	750			65	63	BPZ:VVF31.65-63	**VVF31.65-63**
100	100	175	175	300	500			80	78	BPZ:VVF31.80	**VVF31.80**
100	100	175	175	300	500			80	100	BPZ:VVF31.80-100	**VVF31.80-100**
						200	300	100	124	BPZ:VVF31.90	**VVF31.90**
						200	300	100	160	BPZ:VVF31.100-160	**VVF31.100-160**
						150	200	125	200	BPZ:VVF31.91	**VVF31.91**
						150	200	125	250	BPZ:VVF31.125-250	**VVF31.125-250**
						100	125	150	300	BPZ:VVF31.92	**VVF31.92**
						100	125	150	315	BPZ:VVF31.150-315	**VVF31.150-315**

Globe and pressure independent combi valves
2-port flanged valves, PN10: VVF31..

Range overview 2-port valves C/VVF31..

SAX.. Δp_{max} [kPa]	SAX.. Δp_s [kPa]	SKD.. Δp_{max} [kPa]	SKD.. Δp_s [kPa]	SKB.. Δp_{max} [kPa]	SKB.. Δp_s [kPa]	SKC.. Δp_{max} [kPa]	SKC.. Δp_s [kPa]	DN	k_{vs} [m³/h]	Stock No.	Product No.
300	1000	300	1000	300	1000			25	5	BPZ:C/VVF31.24	**C/VVF31.24**
300	1000	300	1000	300	1000			25	6.3	BPZ:C/VVF31.25-6.3	**C/VVF31.25-6.3**
300	1000	300	1000	300	1000			25	7.5	BPZ:C/VVF31.25	**C/VVF31.25**
300	1000	300	1000	300	1000			25	10	BPZ:C/VVF31.25-10	**C/VVF31.25-10**
300	525	300	775	300	1000			40	12	BPZ:C/VVF31.39	**C/VVF31.39**
300	525	300	775	300	1000			40	16	BPZ:C/VVF31.40-16	**C/VVF31.40-16**
300	525	300	775	300	1000			40	19	BPZ:C/VVF31.40	**C/VVF31.40**
300	525	300	775	300	1000			40	25	BPZ:C/VVF31.40-25	**C/VVF31.40-25**
300	325	300	475	300	1000			50	31	BPZ:C/VVF31.50	**C/VVF31.50**
300	325	300	475	300	1000			50	40	BPZ:C/VVF31.50-40	**C/VVF31.50-40**
175	175	275	275	300	750			65	49	BPZ:C/VVF31.65	**C/VVF31.65**
175	175	275	275	300	750			65	63	BPZ:C/VVF31.65-63	**C/VVF31.65-63**
100	100	175	175	300	500			80	78	BPZ:C/VVF31.80	**C/VVF31.80**
100	100	175	175	300	500			80	100	BPZ:C/VVF31.80-100	**C/VVF31.80-100**
						200	300	100	124	BPZ:C/VVF31.90	**C/VVF31.90**
						200	300	100	160	BPZ:C/VVF31.100-160	**C/VVF31.100-160**
						150	200	125	200	BPZ:C/VVF31.91	**C/VVF31.91**
						150	200	125	250	BPZ:C/VVF31.125-250	**C/VVF31.125-250**
						100	125	150	300	BPZ:C/VVF31.92	**C/VVF31.92**
						100	125	150	315	BPZ:C/VVF31.150-315	**C/VVF31.150-315**

Replacement sealing glands for VVF31..:

VVF/VXF31.., DN15...DN80: part no. 4 284 8806 0
VVF/VXF31.., DN100...DN150: part no. 4 679 5629 0

Field of application for VVF31..

Medium	Temperature	Operating pressure	Sealing gland
Chilled water Brine Water with anti-freeze Low-temperature hot water	-10...150 °C	10 bar ISO 7005	EPDM O-ring, silicone-free grease

For media < 0° C, stem heating element ASZ6.5 or ASZ6.6 is required.

Combinable actuator to VVF31..

Operating voltage	Positioning signal	Positioning time [s]	Spring return function	Data sheet	Stock No.	Product No.
AC 230 V	3-position	120	no	N4501	S55150-A105	**SAX31.00**
AC 230 V	3-position	30	no	N4501	S55150-A106	**SAX31.03**
AC 24 V DC 24 V	DC 0...10 V DC 4...20 mA 0...1000 Ohm	30	no	N4501	S55150-A100	**SAX61.03**
AC 230 V	3-position	120	No	N4561	BPZ:SKD32.50	**SKD32.50**
AC 230 V	3-position	120	Yes (8 s)	N4561	BPZ:SKD32.51	**SKD32.51**
AC 230 V	3-position	Open 30 Close 10	Yes (8 s)	N4561	BPZ:SKD32.21	**SKD32.21**
AC 24 V	DC 0...10 V DC 4...20 mA 0...1000 Ohm	Open 30 Close 15	No	N4561	BPZ:SKD60	**SKD60**
AC 24 V	DC 0...10 V DC 4...20 mA 0...1000 Ohm	Open 30 Close 15	Yes (15 s)	N4561	BPZ:SKD62	**SKD62**
AC 230 V	3-position	120	No	N4564	BPZ:SKB32.50	**SKB32.50**
AC 230 V	3-position	120	Yes (10 s)	N4564	BPZ:SKB32.51	**SKB32.51**
AC 24 V	DC 0...10 V 4...20 mA 0...1000 Ohm	Open 120 Close 10	No	N4564	BPZ:SKB60	**SKB60**
AC 24 V	DC 0...10 V 4...20 mA 0...1000 Ohm	Open 120 Close 10	Yes (10 s)	N4564	BPZ:SKB62	**SKB62**
AC 230 V	3-position	120	No	N4566	BPZ:SKC32.60	**SKC32.60**
AC 230 V	3-position	120	Yes (18 s)	N4566	BPZ:SKC32.61	**SKC32.61**
AC 24 V	DC 0...10 V 4...20 mA 0...1000 Ohm	Open 120 Close 20	No	N4566	BPZ:SKC60	**SKC60**
AC 24 V	DC 0...10 V 4...20 mA 0...1000 Ohm	Open 120 Close 20	Yes (20 s)	N4566	BPZ:SKC62	**SKC62**

Globe and pressure independent combi valves
2-port flanged valves, PN16: VVF40..

VVF40..

2-port seat valves PN16 with flanged connections

- With flanged connections to ISO 7005
- For chilled, low and high temperature water and brine in closed circuits

Data sheet	N4330
Stroke	From DN 100: 40 mm To DN 80: 20 mm
Leakage rate	0...0.02 % of k_{vs} value
Medium temperature	-10...150 °C
Valve characteristic	Equal percentage
Rangeability	DN 15...40: >50 DN 50...150: >100
Permissible operating pressure	1600 kPa
Material, valve body	Cast iron EN-GJL-250/EN-GJL-HB 215
Material, inside set	< DN 40: CrNi steel/brass > DN 50: CrNi steel/Rg5
PN class	PN 16

Range overview 2-port valves VVF40..

SAX.. Δp_{max} [kPa]	SAX.. Δp_s [kPa]	SKD.. Δp_{max} [kPa]	SKD.. Δp_s [kPa]	SKB.. Δp_{max} [kPa]	SKB.. Δp_s [kPa]	SKC.. Δp_{max} [kPa]	SKC.. Δp_s [kPa]	DN	k_{vs} [m³/h]	Stock No.	Product No.
300	1600	300	1600	300	1600			15	1.9	BPZ:VVF40.15-1.9	**VVF40.15-1.9**
300	1600	300	1600	300	1600			15	2.5	BPZ:VVF40.15-2.5	**VVF40.15-2.5**
300	1600	300	1600	300	1600			15	3	BPZ:VVF40.15-3	**VVF40.15-3**
300	1600	300	1600	300	1600			15	4	BPZ:VVF40.15-4	**VVF40.15-4**
300	1550	300	1600	300	1600			25	5	BPZ:VVF40.25-5	**VVF40.25-5**
300	1550	300	1600	300	1600			25	6.3	BPZ:VVF40.25-6.3	**VVF40.25-6.3**
300	1550	300	1600	300	1600			25	7.5	BPZ:VVF40.25-7.5	**VVF40.25-7.5**
300	1550	300	1600	300	1600			25	10	BPZ:VVF40.25-10	**VVF40.25-10**
300	525	300	775	300	1600			40	12	BPZ:VVF40.40-12	**VVF40.40-12**
300	525	300	775	300	1600			40	16	BPZ:VVF40.40-16	**VVF40.40-16**
300	525	300	775	300	1600			40	19	BPZ:VVF40.40-19	**VVF40.40-19**
300	525	300	775	300	1600			40	25	BPZ:VVF40.40-25	**VVF40.40-25**
300	325	300	475	300	1300			50	31	BPZ:VVF40.50-31	**VVF40.50-31**
300	325	300	475	300	1300			50	40	BPZ:VVF40.50-40	**VVF40.50-40**
175	175	275	275	300	750			65	49	BPZ:VVF40.65-49	**VVF40.65-49**
175	175	275	275	300	750			65	63	BPZ:VVF40.65-63	**VVF40.65-63**
100	100	175	175	300	500			80	78	BPZ:VVF40.80-78	**VVF40.80-78**
100	100	175	175	300	500			80	100	BPZ:VVF40.80-100	**VVF40.80-100**
						200	300	100	124	BPZ:VVF40.100-124	**VVF40.100-124**
						200	300	100	160	BPZ:VVF40.100-160	**VVF40.100-160**
						150	200	125	200	BPZ:VVF40.125-200	**VVF40.125-200**
						150	200	125	250	BPZ:VVF40.125-250	**VVF40.125-250**
						100	125	150	300	BPZ:VVF40.150-300	**VVF40.150-300**
						100	125	150	315	BPZ:VVF40.150-315	**VVF40.150-315**

Range overview 2-port valves C/VVF40..

SAX.. Δp_{max} [kPa]	SAX.. Δp_s [kPa]	SKD.. Δp_{max} [kPa]	SKD.. Δp_s [kPa]	SKB.. Δp_{max} [kPa]	SKB.. Δp_s [kPa]	SKC.. Δp_{max} [kPa]	SKC.. Δp_s [kPa]	DN	k_{vs} [m³/h]	Stock No.	Product No.
300	1550	300	1600	300	1600			25	5	BPZ:C/VVF40.25-5	**C/VVF40.25-5**
300	1550	300	1600	300	1600			25	6.3	BPZ:C/VVF40.25-6.3	**C/VVF40.25-6.3**
300	1550	300	1600	300	1600			25	7.5	BPZ:C/VVF40.25-7.5	**C/VVF40.25-7.5**
300	1550	300	1600	300	1600			25	10	BPZ:C/VVF40.25-10	**C/VVF40.25-10**
300	525	300	775	300	1600			40	12	BPZ:C/VVF40.40-12	**C/VVF40.40-12**
300	525	300	775	300	1600			40	16	BPZ:C/VVF40.40-16	**C/VVF40.40-16**
300	525	300	775	300	1600			40	19	BPZ:C/VVF40.40-19	**C/VVF40.40-19**
300	525	300	775	300	1600			40	25	BPZ:C/VVF40.40-25	**C/VVF40.40-25**
300	325	300	475	300	1300			50	31	BPZ:C/VVF40.50-31	**C/VVF40.50-31**
300	325	300	475	300	1300			50	40	BPZ:C/VVF40.50-40	**C/VVF40.50-40**
175	175	275	275	300	750			65	49	BPZ:C/VVF40.65-49	**C/VVF40.65-49**
175	175	275	275	300	750			65	63	BPZ:C/VVF40.65-63	**C/VVF40.65-63**
100	100	175	175	300	500			80	78	BPZ:C/VVF40.80-78	**C/VVF40.80-78**
100	100	175	175	300	500			80	100	BPZ:C/VVF40.80-100	**C/VVF40.80-100**
						200	300	100	124	BPZ:C/VVF40.100-124	**C/VVF40.100-124**
						200	300	100	160	BPZ:C/VVF40.100-160	**C/VVF40.100-160**
						150	200	125	200	BPZ:C/VVF40.125-200	**C/VVF40.125-200**
						150	200	125	250	BPZ:C/VVF40.125-250	**C/VVF40.125-250**
						100	125	150	300	BPZ:C/VVF40.150-300	**C/VVF40.150-300**
						100	125	150	315	BPZ:C/VVF40.150-315	**C/VVF40.150-315**

Replacement sealing glands for VVF40..

VVF/VXF40.., DN15...DN80: part no. 4 284 8806 0
VVF/VXF40.., DN100...DN150: part no. 4 679 5629 0

Field of application for VVF40..

Medium	Temperature	Operating pressure	Sealing gland
Chilled water Brine Water with anti-freeze Low-temperature hot water	-10...150 °C	16 bar ISO 7005	EPDM O-ring, silicone-free grease

For media < 0°C, stem heating element ASZ6.5 or ASZ6.6 is required.

Globe and pressure independent combi valves
2-port flanged valves, PN16: VVF40..

Combinable actuator for VVF40..

Operating voltage	Positioning signal	Positioning time [s]	Spring return function	Data sheet	Stock No.	Product No.
AC 230 V	3-position	120	no	N4501	S55150-A105	**SAX31.00**
AC 230 V	3-position	30	no	N4501	S55150-A106	**SAX31.03**
AC 24 V DC 24 V	DC 0...10 V DC 4...20 mA 0...1000 Ohm	30	no	N4501	S55150-A100	**SAX61.03**
AC 230 V	3-position	120	No	N4561	BPZ:SKD32.50	**SKD32.50**
AC 230 V	3-position	120	Yes (8 s)	N4561	BPZ:SKD32.51	**SKD32.51**
AC 230 V	3-position	Open 30 Close 10	Yes (8 s)	N4561	BPZ:SKD32.21	**SKD32.21**
AC 24 V	DC 0...10 V DC 4...20 mA 0...1000 Ohm	Open 30 Close 15	No	N4561	BPZ:SKD60	**SKD60**
AC 24 V	DC 0...10 V DC 4...20 mA 0...1000 Ohm	Open 30 Close 15	Yes (15 s)	N4561	BPZ:SKD62	**SKD62**
AC 230 V	3-position	120	No	N4564	BPZ:SKB32.50	**SKB32.50**
AC 230 V	3-position	120	Yes (10 s)	N4564	BPZ:SKB32.51	**SKB32.51**
AC 24 V	DC 0...10 V 4...20 mA 0...1000 Ohm	Open 120 Close 10	No	N4564	BPZ:SKB60	**SKB60**
AC 24 V	DC 0...10 V 4...20 mA 0...1000 Ohm	Open 120 Close 10	Yes (10 s)	N4564	BPZ:SKB62	**SKB62**
AC 230 V	3-position	120	No	N4566	BPZ:SKC32.60	**SKC32.60**
AC 230 V	3-position	120	Yes (18 s)	N4566	BPZ:SKC32.61	**SKC32.61**
AC 24 V	DC 0...10 V 4...20 mA 0...1000 Ohm	Open 120 Close 20	No	N4566	BPZ:SKC60	**SKC60**
AC 24 V	DC 0...10 V 4...20 mA 0...1000 Ohm	Open 120 Close 20	Yes (20 s)	N4566	BPZ:SKC62	**SKC62**

Further information to the actuators please see "Actuators for valves with 20 / 40 mm stroke"
3-position actuators are also available as AC 24 V version, see "Actuators for valves with 20 / 40 mm stroke".

2-port seat valve PN16 with flanged connections

VVF43..

- With flanged connections to ISO 7005
- For cooling, chilled, low and high temperature water, brine, heat transfer oils, saturated steam and superheated steam in open and closed circuits

Data sheet	N4404
Stroke	40 mm
Leakage rate	0...0.01 % of k_{vs} value
Medium temperature	-20...220 °C
Valve characteristic	Equal percentage k_{vs} 250/400 linear
Rangeability	>100
Permissible operating pressure	1600 kPa
Material, valve body	Nodular cast iron EN-GJS-400-18-LT
Material, inside set	Stainless steel
PN class	PN 16

Range overview 2-port valves VVF43..

SKC.. Δp_{max} [kPa]	SKC.. Δp_s [kPa]	DN	k_{vs} [m³/h]	Stock No.	Product No.
650	700	65	50	S55206-V100	**VVF43.65-50**
650	700	65	63	S55206-V101	**VVF43.65-63**
400	450	80	80	S55206-V102	**VVF43.80-80**
400	450	80	100	S55206-V103	**VVF43.80-100**
250	300	100	125	S55206-V104	**VVF43.100-125**
250	300	100	160	S55206-V105	**VVF43.100-160**
160	175	125	200	S55206-V106	**VVF43.125-200**
160	175	125	250	S55206-V107	**VVF43.125-250**
100	125	150	315	S55206-V108	**VVF43.150-315**
100	125	150	400	S55206-V109	**VVF43.150-400**

2-port seat valve PN16 with flanged connections, pressure compensated

VVF43..K

- With flanged connections to ISO 7005
- For cooling, chilled, low and high temperature water, brine, heat transfer oils, saturated steam and superheated steam in open and closed circuits

Data sheet	N4404
Stroke	40 mm
Leakage rate	0...0.02 % of k_{vs} value
Medium temperature	-20...220 °C
Valve characteristic	Equal percentage k_{vs} 250/360 linear
Rangeability	>100
Permissible operating pressure	1600 kPa
Material, valve body	Nodular cast iron EN-GJS-400-18-LT
Material, inside set	CrNi steel
PN class	PN 16

Range overview 2-port valves VVF43..K

SKC.. Δp_{max} [kPa]	SKC.. Δp_s [kPa]	DN	k_{vs} [m³/h]	Stock No.	Product No.
800	1600	65	63	S55206-V110	VVF43.65-63K
800	1600	80	100	S55206-V111	VVF43.80-100K
800	1600	100	160	S55206-V112	VVF43.100-160K
800	1600	125	250	S55206-V113	VVF43.125-250K
800	1600	150	360	S55206-V114	VVF43.150-360K

Field of application for VVF43..

Medium	Temperature	Operating pressure	Sealing gland
Chilled water Cooling water Brine Water with anti-freeze Low-temperature hot water	-20...150 °C	16 bar ISO 7005	FEPM O-ring, silicone-free grease
High-temperature hot water	≤ 180 °C	16 bar ISO 7005	FEPM O-ring, silicone-free grease
Heat transfer oil	≤ 220 °C	16 bar	FEPM O-ring, silicone-free grease
Saturated steam	≤ 200 °C	15 bar abs	FEPM O-ring, silicone-free grease
Superheated steam	≤ 220 °C	15 bar abs	FEPM O-ring, silicone-free grease

For media < 0 °C, stem heating element ASZ6.5 or ASZ6.6 is required.
Media < -5 °C requires sealing gland 428488060.

7

Sealing gland for media temperatures < -5 °C

Product Title	Data sheet	Stock No.	Product No.
Sealing gland complete, stem diameter 10 mm, sealing material EPDM		BPZ:428488060	**428488060**

Combinable actuator for VVF43..

Operating voltage	Positioning signal	Positioning time [s]	Spring return function	Data sheet	Stock No.	Product No.
AC 230 V	3-position	120	no	N4501	S55150-A105	**SAX31.00**
AC 230 V	3-position	30	no	N4501	S55150-A106	**SAX31.03**
AC 24 V DC 24 V	DC 0...10 V DC 4...20 mA 0...1000 Ohm	30	no	N4501	S55150-A100	**SAX61.03**
AC 230 V	3-position	120	No	N4561	BPZ:SKD32.50	**SKD32.50**
AC 230 V	3-position	120	Yes (8 s)	N4561	BPZ:SKD32.51	**SKD32.51**
AC 230 V	3-position	Open 30 Close 10	Yes (8 s)	N4561	BPZ:SKD32.21	**SKD32.21**
AC 24 V	DC 0...10 V DC 4...20 mA 0...1000 Ohm	Open 30 Close 15	No	N4561	BPZ:SKD60	**SKD60**
AC 24 V	DC 0...10 V DC 4...20 mA 0...1000 Ohm	Open 30 Close 15	Yes (15 s)	N4561	BPZ:SKD62	**SKD62**
AC 230 V	3-position	120	No	N4564	BPZ:SKB32.50	**SKB32.50**
AC 230 V	3-position	120	Yes (10 s)	N4564	BPZ:SKB32.51	**SKB32.51**
AC 24 V	DC 0...10 V 4...20 mA 0...1000 Ohm	Open 120 Close 10	No	N4564	BPZ:SKB60	**SKB60**
AC 24 V	DC 0...10 V 4...20 mA 0...1000 Ohm	Open 120 Close 10	Yes (10 s)	N4564	BPZ:SKB62	**SKB62**
AC 230 V	3-position	120	No	N4566	BPZ:SKC32.60	**SKC32.60**
AC 230 V	3-position	120	Yes (18 s)	N4566	BPZ:SKC32.61	**SKC32.61**
AC 24 V	DC 0...10 V 4...20 mA 0...1000 Ohm	Open 120 Close 20	No	N4566	BPZ:SKC60	**SKC60**
AC 24 V	DC 0...10 V 4...20 mA 0...1000 Ohm	Open 120 Close 20	Yes (20 s)	N4566	BPZ:SKC62	**SKC62**

Further information to the actuators please see "Actuators for valves with 20 / 40 mm stroke"
3-position actuators are also available as AC 24 V version, see "Actuators for valves with 20 / 40 mm stroke".

Globe and pressure independent combi valves
2-port flanged valves, PN16: VVF47..

VVF47..

2-port seat valves PN16, flanged connections VVF47..

For use in heating, ventilating and air conditioning systems as a control valve for closed circuits

Data sheet	N4419
Leakage rate	0...0.1% of Kvs value
Medium temperature	1...95 °C
Valve characteristic	Equal percentage
Rangeability	DN 50...150: > 50
Material, valve body	Grey cast iron EN-GJL-250
Material, inside set	CrNi/bronze
PN class	PN 16

Range overview 2-port valves VVF47..

SBX.. Δp_{max} [kPa]	SBX.. Δp_s [kPa]	SBV.. Δp_{max} [kPa]	SBV.. Δp_s [kPa]	Stroke [mm]	DN	k_{vs} [m³/h]	Stock No.	Product No.
300	300			20	50	40	S55220-V106	VVF47.50
175	175	300	400	20	65	63	S55220-V107	VVF47.65
100	100	250	250	20	80	100	S55220-V108	VVF47.80
		200	200	40	100	160	S55220-V109	VVF47.100
		300	400	40	125	250	S55220-V110	VVF47.125
		300	400	40	150	315	S55220-V111	VVF47.150

7

Field of application for VVF47..

Medium	Temperature	Operating pressure	Sealing gland
Chilled water Brine Water with anti-freeze Low-temperature hot water	1...95 °C	16 bar ISO 7005	EPDM O-ring, silicone-free grease

Combinable actuator for VVF47..

Operating voltage	Positioning signal	Positioning time [s]	Data sheet	Stock No.	Product No.
AC 230 V	3-position	120	N4519	S55160-A102	SBX31
AC 24 V	DC 0...10 V	120	N4519	S55160-A100	SBX61
AC 24 V	3-position	120	N4519	S55160-A101	SBX81
AC 230 V	3-position	180	N4519	S55160-A105	SBV31
AC 24 V	DC 0...10 V	180	N4519	S55160-A103	SBV61
AC 24 V	3-position	180	N4519	S55160-A104	SBV81

2-port seat valves PN25 with flanged connections

VVF529..K

- With flanged connections to ISO 7005
- For cooling, chilled, low and high temperature hot water, brine, thermooil, saturated and superheated steam in open or closed circuits

Data sheet	Q4383
Stroke	To DN 65: 20 mm From DN 80: 40 mm
Leakage rate	0...0.05% if Kvs value
Medium temperature	1...220 °C
Valve characteristic	Equal percentage
Permissible operating pressure	2500 kPa
Material, valve body	Nodular cast iron EN-GJS-400-18-LT
Material, inside set	Stainless steel

Range overview of 2-port seat valves VVF529..K

SKD.. Δp_{max} [kPa]	SKD.. Δp_s [kPa]	SKB.. Δp_{max} [kPa]	SKB.. Δp_s [kPa]	SKC.. Δp_{max} [kPa]	SKC.. Δp_s [kPa]	DN	k_{vs} [m³/h]	Stock No.	Product No.
1600	1600	1600	2500			50	31 m³/h	BPZ:VVF529.50K	**VVF529.50K**
1600	1600	1600	2500			65	49 m³/h	BPZ:VVF529.65K	**VVF529.65K**
				1600	2500	80	78 m³/h	BPZ:VVF529.80K	**VVF529.80K**
				1600	2500	100	124 m³/h	BPZ:VVF529.100K	**VVF529.100K**
				1600	2500	125	200 m³/h	BPZ:VVF529.125K	**VVF529.125K**
				1600	2500	150	300 m³/h	BPZ:VVF529.150K	**VVF529.150K**

Avaliable until March 2013

Field of application for VVF529..K

Medium	Temperature	Valve packing
Low-temperature hot water	up to 150 °C	EPDM O-ring, silicon-free
Thermooil	up to 180 °C	Teflon
High-temperature hot water	up to 180 °C	Teflon
Chilled water / brine	down to -10 °C	EPDM O-ring, silicon-free

Water with anti-freequze

Combinable actuator to VVF529..K

Operating voltage	Positioning signal	Positioning time [s]	Spring return function	Data sheet	Stock No.	Product No.
AC 230 V	3-position	120	No	N4561	BPZ:SKD32.50	**SKD32.50**
AC 230 V	3-position	120	Yes (8 s)	N4561	BPZ:SKD32.51	**SKD32.51**
AC 230 V	3-position	Open 30 Close 10	Yes (8 s)	N4561	BPZ:SKD32.21	**SKD32.21**
AC 24 V	DC 0...10 V DC 4...20 mA 0...1000 Ohm	Open 30 Close 15	No	N4561	BPZ:SKD60	**SKD60**
AC 24 V	DC 0...10 V DC 4...20 mA 0...1000 Ohm	Open 30 Close 15	Yes (15 s)	N4561	BPZ:SKD62	**SKD62**
AC 230 V	3-position	120	No	N4564	BPZ:SKB32.50	**SKB32.50**
AC 230 V	3-position	120	Yes (10 s)	N4564	BPZ:SKB32.51	**SKB32.51**
AC 24 V	DC 0...10 V 4...20 mA 0...1000 Ohm	Open 120 Close 10	No	N4564	BPZ:SKB60	**SKB60**
AC 24 V	DC 0...10 V 4...20 mA 0...1000 Ohm	Open 120 Close 10	Yes (10 s)	N4564	BPZ:SKB62	**SKB62**
AC 230 V	3-position	120	No	N4566	BPZ:SKC32.60	**SKC32.60**
AC 230 V	3-position	120	Yes (18 s)	N4566	BPZ:SKC32.61	**SKC32.61**
AC 24 V	DC 0...10 V 4...20 mA 0...1000 Ohm	Open 120 Close 20	No	N4566	BPZ:SKC60	**SKC60**
AC 24 V	DC 0...10 V 4...20 mA 0...1000 Ohm	Open 120 Close 20	Yes (20 s)	N4566	BPZ:SKC62	**SKC62**
AC 24 V	DC 0...10 V 4...20 mA 0...1000 Ohm	Open 120 Close 20	Yes (20 s)	N4566	BPZ:SKC62UA	**SKC62UA**

2-port seat valve PN25 with flanged connections

VVF53..

- With flanged connections to ISO 7005
- For cooling, chilled, low and high temperature water, brine, heat transfer oils, saturated and superheated steam in open and closed circuits

Data sheet	N4405
Stroke	To DN 50: 20 mm From DN 65: 40 mm
Leakage rate	0...0.01 % of k_{vs} value
Medium temperature	-20...220 °C
Valve characteristic	Equal percentage k_{vs} 250/400 linear
Rangeability	DN 15, $k_{vs} \leq 1{,}25$ m³/h: >50 DN 15...150: >100
Permissible operating pressure	2500 kPa
Material, valve body	Nodular cast iron EN-GJS-400-18-LT
Material, inside set	Stainless steel
PN class	PN 16 / PN 25

Range overview 2-port valves VVF53.. DN 15/ 20/ 25

SAX.. Δp_{max} [kPa]	SAX.. Δp_s [kPa]	SKD.. Δp_{max} [kPa]	SKD.. Δp_s [kPa]	SKB.. Δp_{max} [kPa]	SKB.. Δp_s [kPa]	SKC.. Δp_{max} [kPa]	SKC.. Δp_s [kPa]	DN	k_{vs} [m³/h]	Stock No.	Product No.
1200	2500	1200	2500	1200	2500			15	0.16	S55208-V100	**VVF53.15-0.16**
1200	2500	1200	2500	1200	2500			15	0.2	S55208-V101	**VVF53.15-0.2**
1200	2500	1200	2500	1200	2500			15	0.25	S55208-V102	**VVF53.15-0.25**
1200	2500	1200	2500	1200	2500			15	0.32	S55208-V103	**VVF53.15-0.32**
1200	2500	1200	2500	1200	2500			15	0.4	S55208-V104	**VVF53.15-0.4**
1200	2500	1200	2500	1200	2500			15	0.5	S55208-V105	**VVF53.15-0.5**
1200	2500	1200	2500	1200	2500			15	0.63	S55208-V106	**VVF53.15-0.63**
1200	2500	1200	2500	1200	2500			15	0.8	S55208-V107	**VVF53.15-0.8**
1200	2500	1200	2500	1200	2500			15	1	S55208-V108	**VVF53.15-1**
1200	2500	1200	2500	1200	2500			15	1.25	S55208-V109	**VVF53.15-1.25**
1200	2500	1200	2500	1200	2500			15	1.6	S55208-V110	**VVF53.15-1.6**
1200	2500	1200	2500	1200	2500			15	2	S55208-V111	**VVF53.15-2**
1200	2500	1200	2500	1200	2500			15	2.5	S55208-V112	**VVF53.15-2.5**
1200	2500	1200	2500	1200	2500			15	3.2	S55208-V113	**VVF53.15-3.2**
1200	2500	1200	2500	1200	2500			15	4	S55208-V114	**VVF53.15-4**
1200	2500	1200	2500	1200	2500			20	6.3	S55208-V116	**VVF53.20-6.3**
1200	1600	1200	2100	1200	2500			25	5	S55208-V117	**VVF53.25-5**
1200	1600	1200	2100	1200	2500			25	6.3	S55208-V118	**VVF53.25-6.3**
1200	1600	1200	2100	1200	2500			25	8	S55208-V119	**VVF53.25-8**
1200	1600	1200	2100	1200	2500			25	10	S55208-V120	**VVF53.25-10**

Globe and pressure independent combi valves
2-port flanged valves, PN25: VVF53..

Range overview 2-port valves VVF53.. > DN 32

SAX.. Δp_{max} [kPa]	SAX.. Δp_s [kPa]	SKD.. Δp_{max} [kPa]	SKD.. Δp_s [kPa]	SKB.. Δp_{max} [kPa]	SKB.. Δp_s [kPa]	SKC.. Δp_{max} [kPa]	SKC.. Δp_s [kPa]	DN	k_{vs} [m³/h]	Stock No.	Product No.
750	900	1100	1200	1200	2500			32	16	S55208-V122	**VVF53.32-16**
500	550	650	750	1200	2000			40	12.5	S55208-V123	**VVF53.40-12.5**
500	550	650	750	1200	2000			40	16	S55208-V124	**VVF53.40-16**
500	550	650	750	1200	2000			40	20	S55208-V125	**VVF53.40-20**
500	550	650	750	1200	2000			40	25	S55208-V126	**VVF53.40-25**
300	350	400	450	1150	1200			50	31.5	S55208-V127	**VVF53.50-31.5**
300	350	400	450	1150	1200			50	40	S55208-V128	**VVF53.50-40**
						650	700	65	63	S55208-V129	**VVF53.65-63**
						400	450	80	100	S55208-V130	**VVF53.80-100**
						250	300	100	160	S55208-V131	**VVF53.100-160**
						160	175	125	250	S55208-V132	**VVF53.125-250**
						100	125	150	400	S55208-V133	**VVF53.150-400**

VVF53..K

2-port seat valve PN25 with flanged connections, pressure compensated

- With flanged connections to ISO 7005
- For cooling, chilled, low and high temperature water, brine, heat transfer oils, saturated steam and superheated steam in open and closed circuits

Data sheet	N4405
Stroke	DN 50: 20 mm From DN 65: 40 mm
Leakage rate	0...0.02 % of k_{vs} value
Medium temperature	-20...220 °C
Valve characteristic	Equal percentage k_{vs} 250/360 linear
Rangeability	> 100
Permissible operating pressure	2500 kPa
Material, valve body	Nodular cast iron EN-GJS-400-18-LT
Material, inside set	CrNi steel
PN class	PN 25

Range overview 2-port valves VVF53..K

SAX.. Δp_{max} [kPa]	SAX.. Δp_s [kPa]	SKD.. Δp_{max} [kPa]	SKD.. Δp_s [kPa]	SKB.. Δp_{max} [kPa]	SKB.. Δp_s [kPa]	SKC.. Δp_{max} [kPa]	SKC.. Δp_s [kPa]	DN	k_{vs} [m³/h]	Stock No.	Product No.
1200	2500	1200	2500	1200	2500			50	40	S55208-V134	VVF53.50-40K
						1200	2500	65	63	S55208-V135	VVF53.65-63K
						1200	2500	80	100	S55208-V136	VVF53.80-100K
						1200	2500	100	160	S55208-V137	VVF53.100-160K
						1200	2500	125	250	S55208-V138	VVF53.125-250K
						1200	2500	150	360	S55208-V139	VVF53.150-360K

NEW PRODUCT

Field of application for VVF53..

Medium	Temperature	Operating pressure	Sealing gland
Chilled water Cooling water Brine Water with anti-freeze Low-temperature hot water	-20...150 °C	25 bar ISO 7005	FEPM O-ring, silicone-free grease
High-temperature hot water	≤ 220 °C	25 bar ISO 7005	FEPM O-ring, silicone-free grease
Heat transfer oil	≤ 220 °C	25 bar	FEPM O-ring, silicone-free grease
Saturated steam	≤ 200 °C	16 bar abs	FEPM O-ring, silicone-free grease
Superheated steam	≤ 220 °C	16 bar abs	FEPM O-ring, silicone-free grease

For media < 0 °C, stem heating element ASZ6.5 or ASZ6.6 is required.
Media < -5 °C requires sealing gland 428488060.

Sealing gland for media temperatures < -5 °C

Product Title	Data sheet	Stock No.	Product No.
Sealing gland complete, stem diameter 10 mm, sealing material EPDM		BPZ:428488060	**428488060**

Combinable actuator to VVF53..

Operating voltage	Positioning signal	Positioning time [s]	Spring return function	Data sheet	Stock No.	Product No.
AC 230 V	3-position	120	no	N4501	S55150-A105	**SAX31.00**
AC 230 V	3-position	30	no	N4501	S55150-A106	**SAX31.03**
AC 24 V DC 24 V	DC 0...10 V DC 4...20 mA 0...1000 Ohm	30	no	N4501	S55150-A100	**SAX61.03**
AC 230 V	3-position	120	No	N4561	BPZ:SKD32.50	**SKD32.50**
AC 230 V	3-position	120	Yes (8 s)	N4561	BPZ:SKD32.51	**SKD32.51**
AC 230 V	3-position	Open 30 Close 10	Yes (8 s)	N4561	BPZ:SKD32.21	**SKD32.21**
AC 24 V	DC 0...10 V DC 4...20 mA 0...1000 Ohm	Open 30 Close 15	No	N4561	BPZ:SKD60	**SKD60**
AC 24 V	DC 0...10 V DC 4...20 mA 0...1000 Ohm	Open 30 Close 15	Yes (15 s)	N4561	BPZ:SKD62	**SKD62**
AC 230 V	3-position	120	No	N4564	BPZ:SKB32.50	**SKB32.50**
AC 230 V	3-position	120	Yes (10 s)	N4564	BPZ:SKB32.51	**SKB32.51**
AC 24 V	DC 0...10 V 4...20 mA 0...1000 Ohm	Open 120 Close 10	No	N4564	BPZ:SKB60	**SKB60**
AC 24 V	DC 0...10 V 4...20 mA 0...1000 Ohm	Open 120 Close 10	Yes (10 s)	N4564	BPZ:SKB62	**SKB62**
AC 230 V	3-position	120	No	N4566	BPZ:SKC32.60	**SKC32.60**
AC 230 V	3-position	120	Yes (18 s)	N4566	BPZ:SKC32.61	**SKC32.61**
AC 24 V	DC 0...10 V 4...20 mA 0...1000 Ohm	Open 120 Close 20	No	N4566	BPZ:SKC60	**SKC60**
AC 24 V	DC 0...10 V 4...20 mA 0...1000 Ohm	Open 120 Close 20	Yes (20 s)	N4566	BPZ:SKC62	**SKC62**
AC 24 V	DC 0...10 V 4...20 mA 0...1000 Ohm	Open 120 Close 20	Yes (20 s)	N4566	BPZ:SKC62UA	**SKC62UA**

2-port seat valves PN40 with flanged connections

VVF61..

- With flanged connections to ISO 7005
- For cooling, chilled, low and high temperature water, brine, heat transfer oils, saturated and superheated steam in open and closed circuits

Control devices MK..6.. (water, steam) are TÜV tested control devices with safety shut-off function per DIN EN 14597.

Data sheet	N4382
Stroke	To DN 50: 20 mm From DN 65: 40 mm
Leakage rate	0...0.02 % of k_{vs} value
Medium temperature	-25...220 °C (350 °C)
Valve characteristic	Equal percentage
Rangeability	DN 15...40: >50 DN 50...150: >100
Permissible operating pressure	4000 kPa
Material, valve body	Cast steel GP240GH
Material, inside set	CrNi steel
PN class	PN 40

Range overview 2-port valves VVF61..

SKD.. Δp_{max} [kPa]	SKD.. Δp_s [kPa]	SKB.. Δp_{max} [kPa]	SKB.. Δp_s [kPa]	SKC.. Δp_{max} [kPa]	SKC.. Δp_s [kPa]	DN	k_{vs} [m³/h]	Stock No.	Product No.
1600	4000	1600	4000			15	0.19	BPZ:VVF61.09	**VVF61.09**
1600	4000	1600	4000			15	0.3	BPZ:VVF61.10	**VVF61.10**
1600	4000	1600	4000			15	0.45	BPZ:VVF61.11	**VVF61.11**
1600	4000	1600	4000			15	0.7	BPZ:VVF61.12	**VVF61.12**
1600	4000	1600	4000			15	1.2	BPZ:VVF61.13	**VVF61.13**
1600	4000	1600	4000			15	1.9	BPZ:VVF61.14	**VVF61.14**
1600	4000	1600	4000			15	3	BPZ:VVF61.15	**VVF61.15**
1600	2250	1600	4000			25	3	BPZ:VVF61.23	**VVF61.23**
1600	2250	1600	4000			25	5	BPZ:VVF61.24	**VVF61.24**
1600	2250	1600	4000			25	7.5	BPZ:VVF61.25	**VVF61.25**
		1600	4000			40	12	BPZ:VVF61.39	**VVF61.39**
		1600	4000			40	19	BPZ:VVF61.40	**VVF61.40**
		1600	4000			50	19	BPZ:VVF61.49	**VVF61.49**
		1600	4000			50	31	BPZ:VVF61.50	**VVF61.50**
				1000	4000	65	49	BPZ:VVF61.65	**VVF61.65**
				700	4000	80	78	BPZ:VVF61.80	**VVF61.80**
				450	4000	100	124	BPZ:VVF61.90	**VVF61.90**
				300	4000	125	200	BPZ:VVF61.91	**VVF61.91**
				200	4000	150	300	BPZ:VVF61.92	**VVF61.92**

Control devices MK..6.. (water, steam) are TÜV tested per DIN EN 14597 and can therefore be used as control devices with safety shut-off function for protection against excessive temperature and pressure.

Replacement sealing glands for VVF61..

VVF/VXF.., DN15...DN25: part no. 4 284 8829 0
VVF/VXF.., DN40...DN150: part no. 4 679 5630 0
VVF/VXF61..2, DN15...DN150: part no. 4 284 8829 0
VVF/VXF61..5, DN15...25: part no. 4 284 9538 0
VVF/VXF61..5, DN40...DN150: part no. 4 284 9540 0

Field of application for VVF61..

Medium	Temperature	Operating pressure	Sealing gland	Suffix
Chilled water Cooling water Brine Water with anti-freeze Low-temperature hot water	-25...220 °C	40 bar ISO 7005	PTFE sleeve	--
High-temperature hot water	≤ 220 °C	40 bar ISO 7005	PTFE sleeve	--
Saturated steam / Super-heated steam	≤ 220 °C	17 bar, ≤ DN25 11 bar, ≥ DN40	PTFE sleeve	--
Heat transfer oil	≤ 220 °C	40 bar ISO 7005	PTFE sleeve	--
Heat transfer oil	220...350 °C	40 bar ISO 7005	PTFE sleeve	2 1)

For media < 0 °C, stem heating element ASZ6.5 is required.
1) Special versions with extended neck are available for applications with heat transfer oil up to 350 °C (only for types VVF61.13 to VVF61.92). When ordering, please give Product No. with type suffix, e.g. VVF61.252

Combinable actuator for VVF61..

Operating voltage	Positioning signal	Positioning time [s]	Spring return function	Data sheet	Stock No.	Product No.
AC 230 V	3-position	120	No	N4561	BPZ:SKD32.50	**SKD32.50**
AC 230 V	3-position	120	Yes (8 s)	N4561	BPZ:SKD32.51	**SKD32.51**
AC 230 V	3-position	Open 30 Close 10	Yes (8 s)	N4561	BPZ:SKD32.21	**SKD32.21**
AC 24 V	DC 0...10 V DC 4...20 mA 0...1000 Ohm	Open 30 Close 15	No	N4561	BPZ:SKD60	**SKD60**
AC 24 V	DC 0...10 V DC 4...20 mA 0...1000 Ohm	Open 30 Close 15	Yes (15 s)	N4561	BPZ:SKD62	**SKD62**
AC 230 V	3-position	120	No	N4564	BPZ:SKB32.50	**SKB32.50**
AC 230 V	3-position	120	Yes (10 s)	N4564	BPZ:SKB32.51	**SKB32.51**
AC 230 V	3-position	120	No	N4564	BPZ:SKB32.50	**SKB32.50**
AC 230 V	3-position	120	Yes (10 s)	N4564	BPZ:SKB32.51	**SKB32.51**
AC 24 V	DC 0...10 V 4...20 mA 0...1000 Ohm	Open 120 Close 10	No	N4564	BPZ:SKB60	**SKB60**
AC 24 V	DC 0...10 V 4...20 mA 0...1000 Ohm	Open 120 Close 10	Yes (10 s)	N4564	BPZ:SKB62	**SKB62**
AC 230 V	3-position	120	No	N4566	BPZ:SKC32.60	**SKC32.60**
AC 230 V	3-position	120	Yes (18 s)	N4566	BPZ:SKC32.61	**SKC32.61**
AC 24 V	DC 0...10 V 4...20 mA 0...1000 Ohm	Open 120 Close 20	No	N4566	BPZ:SKC60	**SKC60**
AC 24 V	DC 0...10 V 4...20 mA 0...1000 Ohm	Open 120 Close 20	Yes (20 s)	N4566	BPZ:SKC62	**SKC62**

Globe and pressure independent combi valves
2-port flanged valves with magnetic actuators, PN16: MVF461H..

MVF461H..

Modulating control valves with magnetic actuator, PN16, flanged

2-port valves PN 16 with magnetic actuator for modulating control of high-temperature hot water or steam.
With positioning control, position feedback signal, spring return function and manual control.

Data sheet	N4361
Operating voltage	AC 24 V DC 24 V
Positioning signal	DC 0...10 V DC 2...10 V DC 0...20 mA DC 4...20 mA DC 0...20 V Phs
Positioning time	< 2 s
Spring return function	A-> AB closed
Position feedback	DC 0...10 V DC 2...10 V DC 0...20 mA DC 4...20 mA
Degree of protection	IP31
Ambient temperature, operation	-5...45 °C
Mounting position	Upright to horizontal
PN class	PN 16
Permissible operating pressure	Water < 120 °C: 1600 kPa Water > 120 °C: 1300 kPa Saturated steam: 900 kPa
Leakage rate	< 0.05% of k_{vs} value
Medium temperature	1...180 °C
Valve characteristic	Equal-percentage Linear
Stroke resolution $\Delta H/H_{100}$	1:1000
Material, valve body	Nodular cast iron EN-GJS-400-18-LT
Material, inside set	CrNi steel

7

Range overview flanged valves MVF461H..

DN	k_{vs} [m³/h]	Δp_{max} [kPa]	Δp_s [kPa]	Power consumption [VA]	Stock No.	Product No.
15	0.6	1000	1000	33	BPZ:MVF461H15-0.6	**MVF461H15-0.6**
15	1.5	1000	1000	33	BPZ:MVF461H15-1.5	**MVF461H15-1.5**
15	3	1000	1000	33	BPZ:MVF461H15-3	**MVF461H15-3**
20	5	1000	1000	33	BPZ:MVF461H20-5	**MVF461H20-5**
25	8	1000	1000	33	BPZ:MVF461H25-8	**MVF461H25-8**
32	12	1000	1000	43	BPZ:MVF461H32-12	**MVF461H32-12**
40	20	1000	1000	65	BPZ:MVF461H40-20	**MVF461H40-20**
50	30	1000	1000	65	BPZ:MVF461H50-30	**MVF461H50-30**

MVF.. valves with magnetic actuators are UL-listed.

Product Title	Data sheet	Stock No.	Product No.
Replacement electronic for MXG461B.., MVF461H.. and MXG462S..		BPZ:ASE12	**ASE12**

Control device PN25, safety function to DIN EN 14597

MK..5..

Control devices with safety shut-off function per DIN EN 14597 for protection against excessive temperature and pressure in district heating, heating, ventilation and air conditioning systems. For open and closed circuits. With positioning control, position feedback signal and spring return function.

Data sheet	N4387
Leakage rate	0...0.05 % of k_{vs} value
Medium temperature	1...150 °C
Valve characteristic	Equal percentage
Rangeability	DN15: 50...100 DN25...40: 100...200
Permissible operating pressure	2500 kPa
Material, valve body	Nodular cast iron EN-GJS-400-18-LT
Material, inside set	Stainless steel
PN class	PN 25
Spring return function	Yes (5...25 s)
Degree of protection	IP54
Ambient temperature, operation	-15...50 °C
Mounting position	Upright to horizontal
Operating voltage	AC 230 V (MK..532..) AC 24 V (MK..562..)
Positioning signal	3-position (MK..532..) DC 0...10 V (MK..562..) DC 4...20 mA (MK..562..) 0...1000 Ohm (MK..562..)
Position feedback	DC 0...10 V (MK..562..) DC 4...20 mA (MK..562..)
Positioning time	120 s (MK..532..) Open 50 s (MKD562..) Close 15 s (MKD562..) Open 120 s (MKB562..) Close 10 s (MKB562..)

Globe and pressure independent combi valves
Control device with safety function, PN25: MK..5..

Range overview control device safety function MKD532..

Δp_{max} [kPa]	Δp_s [kPa]	DN	k_{vs} [m³/h]	Stock No.	Product No.
1600	1600	15	0.16	S55329-M100-A100	MKD532.15-0.16
1600	1600	15	0.2	S55329-M101-A100	MKD532.15-0.2
1600	1600	15	0.25	S55329-M102-A100	MKD532.15-0.25
1600	1600	15	0.32	S55329-M103-A100	MKD532.15-0.32
1600	1600	15	0.4	S55329-M104-A100	MKD532.15-0.4
1600	1600	15	0.5	S55329-M105-A100	MKD532.15-0.5
1600	1600	15	0.63	S55329-M106-A100	MKD532.15-0.63
1600	1600	15	0.8	S55329-M107-A100	MKD532.15-0.8
1600	1600	15	1	S55329-M108-A100	MKD532.15-1
1600	1600	15	1.25	S55329-M109-A100	MKD532.15-1.25
1600	1600	15	1.6	S55329-M110-A100	MKD532.15-1.6
1600	1600	15	2	S55329-M111-A100	MKD532.15-2
1600	1600	15	2.5	S55329-M112-A100	MKD532.15-2.5
1600	1600	15	3.2	S55329-M113-A100	MKD532.15-3.2
1600	1600	15	4	S55329-M114-A100	MKD532.15-4
1600	1600	25	5	S55329-M115-A100	MKD532.25-5
1600	1600	25	6.3	S55329-M116-A100	MKD532.25-6.3
1600	1600	25	8	S55329-M117-A100	MKD532.25-8
1600	1600	25	10	S55329-M118-A100	MKD532.25-10
600	600	40	12.5	S55329-M119-A100	MKD532.40-12.5
600	600	40	16	S55329-M120-A100	MKD532.40-16
600	600	40	20	S55329-M121-A100	MKD532.40-20
600	600	40	25	S55329-M122-A100	MKD532.40-25

MKD532..: AC 230 V, 3-position

Range overview control device safety function MKD562..

Δp_{max} [kPa]	Δp_s [kPa]	DN	k_{vs} [m³/h]	Stock No.	Product No.
1600	1600	15	0.16	S55329-M100-A101	MKD562.15-0.16
1600	1600	15	0.2	S55329-M101-A101	MKD562.15-0.2
1600	1600	15	0.25	S55329-M102-A101	MKD562.15-0.25
1600	1600	15	0.32	S55329-M103-A101	MKD562.15-0.32
1600	1600	15	0.4	S55329-M104-A101	MKD562.15-0.4
1600	1600	15	0.5	S55329-M105-A101	MKD562.15-0.5
1600	1600	15	0.63	S55329-M106-A101	MKD562.15-0.63
1600	1600	15	0.8	S55329-M107-A101	MKD562.15-0.8
1600	1600	15	1	S55329-M108-A101	MKD562.15-1
1600	1600	15	1.25	S55329-M109-A101	MKD562.15-1.25
1600	1600	15	1.6	S55329-M110-A101	MKD562.15-1.6
1600	1600	15	2	S55329-M111-A101	MKD562.15-2
1600	1600	15	2.5	S55329-M112-A101	MKD562.15-2.5
1600	1600	15	3.2	S55329-M113-A101	MKD562.15-3.2
1600	1600	15	4	S55329-M114-A101	MKD562.15-4
1600	1600	25	5	S55329-M115-A101	MKD562.25-5
1600	1600	25	6.3	S55329-M116-A101	MKD562.25-6.3
1600	1600	25	8	S55329-M117-A101	MKD562.25-8
1600	1600	25	10	S55329-M118-A101	MKD562.25-10
600	600	40	12.5	S55329-M119-A101	MKD562.40-12.5
600	600	40	16	S55329-M120-A101	MKD562.40-16
600	600	40	20	S55329-M121-A101	MKD562.40-20
600	600	40	25	S55329-M122-A101	MKD562.40-25

MKD562..: AC 24 V, DC 0...10 V / DC 4...20 mA / 0...1000 Ohm

NEW PRODUCT

Range overview control device safety function MKD532..

Δp_{max} [kPa]	Δp_s [kPa]	DN	k_{vs} [m³/h]	Stock No.	Product No.
1600	2500	15	0.16	S55329-M100-A110	**MKB532.15-0.16**
1600	2500	15	0.2	S55329-M101-A110	**MKB532.15-0.2**
1600	2500	15	0.25	S55329-M102-A110	**MKB532.15-0.25**
1600	2500	15	0.32	S55329-M103-A110	**MKB532.15-0.32**
1600	2500	15	0.4	S55329-M104-A110	**MKB532.15-0.4**
1600	2500	15	0.5	S55329-M105-A110	**MKB532.15-0.5**
1600	2500	15	0.63	S55329-M106-A110	**MKB532.15-0.63**
1600	2500	15	0.8	S55329-M107-A110	**MKB532.15-0.8**
1600	2500	15	1	S55329-M108-A110	**MKB532.15-1**
1600	2500	15	1.25	S55329-M109-A110	**MKB532.15-1.2**
1600	2500	15	1.6	S55329-M110-A110	**MKB532.15-1.6**
1600	2500	15	2	S55329-M111-A110	**MKB532.15-2**
1600	2500	15	2.5	S55329-M112-A110	**MKB532.15-2.5**
1600	2500	15	3.2	S55329-M113-A110	**MKB532.15-3.2**
1600	2500	15	4	S55329-M114-A110	**MKB532.15-4**
1600	2500	25	5	S55329-M115-A110	**MKB532.25-5**
1600	2500	25	6.3	S55329-M116-A110	**MKB532.25-6.3**
1600	2500	25	8	S55329-M117-A110	**MKB532.25-8**
1600	2500	25	10	S55329-M118-A110	**MKB532.25-10**
1600	2000	40	12.5	S55329-M119-A110	**MKB532.40-12**
1600	2000	40	16	S55329-M120-A110	**MKB532.40-16**
1600	2000	40	20	S55329-M121-A110	**MKB532.40-20**
1600	2000	40	25	S55329-M122-A110	**MKB532.40-25**

MKD532..: AC 230 V, 3-position

Range overview control device safety function MKD562..

Δp_{max} [kPa]	Δp_s [kPa]	DN	k_{vs} [m³/h]	Stock No.	Product No.
1600	2500	15	0.16	S55329-M100-A111	**MKB562.15-0.16**
1600	2500	15	0.2	S55329-M101-A111	**MKB562.15-0.2**
1600	2500	15	0.25	S55329-M102-A111	**MKB562.15-0.25**
1600	2500	15	0.32	S55329-M103-A111	**MKB562.15-0.32**
1600	2500	15	0.4	S55329-M104-A111	**MKB562.15-0.4**
1600	2500	15	0.5	S55329-M105-A111	**MKB562.15-0.5**
1600	2500	15	0.63	S55329-M106-A111	**MKB562.15-0.63**
1600	2500	15	0.8	S55329-M107-A111	**MKB562.15-0.8**
1600	2500	15	1	S55329-M108-A111	**MKB562.15-1**
1600	2500	15	1.25	S55329-M109-A111	**MKB562.15-1.2**
1600	2500	15	1.6	S55329-M110-A111	**MKB562.15-1.6**
1600	2500	15	2	S55329-M111-A111	**MKB562.15-2**
1600	2500	15	2.5	S55329-M112-A111	**MKB562.15-2.5**
1600	2500	15	3.2	S55329-M113-A111	**MKB562.15-3.2**
1600	2500	15	4	S55329-M114-A111	**MKB562.15-4**
1600	2500	25	5	S55329-M115-A111	**MKB562.25-5**
1600	2500	25	6.3	S55329-M116-A111	**MKB562.25-6.3**
1600	2500	25	8	S55329-M117-A111	**MKB562.25-8**
1600	2500	25	10	S55329-M118-A111	**MKB562.25-10**
1600	2000	40	12.5	S55329-M119-A111	**MKB562.40-12**
1600	2000	40	16	S55329-M120-A111	**MKB562.40-16**
1600	2000	40	20	S55329-M121-A111	**MKB562.40-20**
1600	2000	40	25	S55329-M122-A111	**MKB562.40-25**

MKD562..: AC 24 V, DC 0...10 V / DC 4...20 mA / 0...1000 Ohm

Accessories for MK..5..

Product Title	Data sheet	Stock No.	Product No.
Auxiliary switch for SKB6../ SKC6../ SKD6..	N4566	BPZ:ASC1.6	**ASC1.6**
Double auxiliary switch for SKB/ C/ D32../82..	N4561	BPZ:ASC9.3	**ASC9.3**
Potentiometer 0...1000 Ohm for SKB/ C/ D32../82..	N4564	BPZ:ASZ7.3	**ASZ7.3**
Potentiometer 0...135 Ohm for SKB/ C/ D32../82..	N4564	BPZ:ASZ7.31	**ASZ7.31**
Potentiometer 0...200 Ohm for SKB/ C/ D32../82..	N4564	BPZ:ASZ7.32	**ASZ7.32**

MK..5..G

Control device PN25, safety function to DIN EN 14597, steam

Control devices with safety shut-off function per DIN EN 14597 for protection against excessive temperature and pressure in district heating, heating, ventilation and air conditioning systems using steam as medium. For closed circuits.

Data sheet	N4389
Leakage rate	0...0.05 % of k_{vs} value
Medium temperature	1...180 °C
Valve characteristic	Equal percentage
Rangeability	DN15: 50...100 DN25...40: 100...200
Permissible operating pressure	2500 kPa
Material, valve body	Nodular cast iron EN-GJS-400-18-LT
Material, inside set	Stainless steel
PN class	PN 25
Spring return function	Yes
Degree of protection	IP54
Ambient temperature, operation	-15...50 °C
Mounting position	Upright to horizontal
Operating voltage	AC 230 V (MK..532..) AC 24 V (MK..562..)
Positioning signal	3-position (MK..532..) DC 0...10 V (MK..562..) DC 4...20 mA (MK..562..) 0...1000 Ohm (MK..562..)
Position feedback	DC 0...10 V (MK..562..) DC 4...20 mA (MK..562..)
Positioning time	120 s (MK..532..) Open 50 s (MKD562..) Close 15 s (MKD562..) Open 120 s (MKB562..) Close 10 s (MKB562..)

7

Range overview control device safety function MKB532..

Δp_{max} [kPa]	Δp_s [kPa]	DN	k_{vs} [m³/h]	Stock No.	Product No.
600	600	15	1.25	S55329-M123-A110	**MKB532.15-1.2G**
600	600	15	1.6	S55329-M124-A110	**MKB532.15-1.6G**
600	600	15	2	S55329-M125-A110	**MKB532.15-2G**
600	600	15	2.5	S55329-M126-A110	**MKB532.15-2.5G**
600	600	15	3.2	S55329-M127-A110	**MKB532.15-3.2G**
600	600	15	4	S55329-M128-A110	**MKB532.15-4G**
600	600	25	5	S55329-M129-A110	**MKB532.25-5G**
600	600	25	6.3	S55329-M130-A110	**MKB532.25-6.3G**
600	600	25	8	S55329-M131-A110	**MKB532.25-8G**
600	600	25	10	S55329-M132-A110	**MKB532.25-10G**
600	600	40	12.5	S55329-M133-A110	**MKB532.40-12G**
600	600	40	16	S55329-M134-A110	**MKB532.40-16G**
600	600	40	20	S55329-M135-A110	**MKB532.40-20G**
600	600	40	25	S55329-M136-A110	**MKB532.40-25G**

MKB532..: AC 230 V, 3-position

Range overview control device safety function MKB562..

Δp_{max} [kPa]	Δp_s [kPa]	DN	k_{vs} [m³/h]	Stock No.	Product No.
600	600	15	1.25	S55329-M123-A111	**MKB562.15-1.2G**
600	600	15	1.6	S55329-M124-A111	**MKB562.15-1.6G**
600	600	15	2	S55329-M125-A111	**MKB562.15-2G**
600	600	15	2.5	S55329-M126-A111	**MKB562.15-2.5G**
600	600	15	3.2	S55329-M127-A111	**MKB562.15-3.2G**
600	600	15	4	S55329-M128-A111	**MKB562.15-4G**
600	600	25	5	S55329-M129-A111	**MKB562.25-5G**
600	600	25	6.3	S55329-M130-A111	**MKB562.25-6.3G**
600	600	25	8	S55329-M131-A111	**MKB562.25-8G**
600	600	25	10	S55329-M132-A111	**MKB562.25-10G**
600	600	40	12.5	S55329-M133-A111	**MKB562.40-12G**
600	600	40	16	S55329-M134-A111	**MKB562.40-16G**
600	600	40	20	S55329-M135-A111	**MKB562.40-20G**
600	600	40	25	S55329-M136-A111	**MKB562.40-25G**

MKB562..: AC 24 V, DC 0...10 V / DC 4...20 mA / 0...1000 Ohm

Accessories for MK..5..G

Product Title	Data sheet	Stock No.	Product No.
Auxiliary switch for SKB6../ SKC6../ SKD6..	N4566	BPZ:ASC1.6	**ASC1.6**
Double auxiliary switch for SKB/ C/ D32../82..	N4561	BPZ:ASC9.3	**ASC9.3**
Potentiometer 0...1000 Ohm for SKB/ C/ D32../82..	N4564	BPZ:ASZ7.3	**ASZ7.3**
Potentiometer 0...135 Ohm for SKB/ C/ D32../82..	N4564	BPZ:ASZ7.31	**ASZ7.31**
Potentiometer 0...200 Ohm for SKB/ C/ D32../82..	N4564	BPZ:ASZ7.32	**ASZ7.32**

Globe and pressure independent combi valves
Control device with safety function, PN25: MK..6..

MK..6..

Control devices PN40, safety function to DIN EN 14597

Control devices with safety shut-off function per DIN EN 14597 for protection against excessive temperature and pressure in district heating, heating, ventilation and air conditioning systems. For open and closed circuits.

Data sheet	N4388
Leakage rate	0...0.05 % of k_{vs} value
Medium temperature	1...220 °C
Valve characteristic	Equal percentage
Rangeability	DN15...40: > 50 DN50...150: > 100
Permissible operating pressure	4000 kPa
Material, valve body	Cast steel GP240GH
Material, inside set	Stainless steel
PN class	PN 40
Spring return function	Yes (5...25 s)
Degree of protection	IP54
Ambient temperature, operation	-15...55 °C
Mounting position	Upright to horizontal
Operating voltage	AC 230 V (MK..632..) AC 24 V (MK..662..)
Positioning signal	3-position (MK..632..) DC 0...10 V (MK..662..) DC 4...20 mA (MK..662..) 0...1000 Ohm (MK..662..)
Position feedback	DC 0...10 V (MK..662..) DC 4...20 mA (MK..662..)
Positioning time	120 s (MK..632..) Open 120 s (MKB662..) Close 10 s (MKB662..) Open 120 s (MKC662..) Close 20 s (MKC662..)

7

Range overview control device safety function MKB632..

Δp_{max} [kPa]	Δp_s [kPa]	DN	k_{vs} [m³/h]	Stock No.	Product No.
1600	3200	15	0.19	S55329-M180-A110	MKB632.15-0.19
1600	3200	15	0.3	S55329-M181-A110	MKB632.15-0.3
1600	3200	15	0.45	S55329-M182-A110	MKB632.15-0.45
1600	3200	15	0.7	S55329-M183-A110	MKB632.15-0.7
1600	3200	15	1.2	S55329-M184-A110	MKB632.15-1.2
1600	3200	15	1.9	S55329-M185-A110	MKB632.15-1.9
1600	3200	15	3	S55329-M186-A110	MKB632.15-3
1600	3200	25	5	S55329-M187-A110	MKB632.25-5
1600	3200	25	7.5	S55329-M188-A110	MKB632.25-7.5
1600	3200	40	12	S55329-M189-A110	MKB632.40-12
1600	3200	40	19	S55329-M190-A110	MKB632.40-19
1600	3200	50	31	S55329-M191-A110	MKB632.50-31

MKB632..: AC 230 V, 3-position

NEW PRODUCT

Range overview control device safety function MKB662..

Δp_{max} [kPa]	Δp_s [kPa]	DN	k_{vs} [m³/h]	Stock No.	Product No.
1600	3200	15	0.19	S55329-M180-A111	MKB662.15-0.19
1600	3200	15	0.3	S55329-M181-A111	MKB662.15-0.3
1600	3200	15	0.45	S55329-M182-A111	MKB662.15-0.45
1600	3200	15	0.7	S55329-M183-A111	MKB662.15-0.7
1600	3200	15	1.2	S55329-M184-A111	MKB662.15-1.2
1600	3200	15	1.9	S55329-M185-A111	MKB662.15-1.9
1600	3200	15	3	S55329-M186-A111	MKB662.15-3
1600	3200	25	5	S55329-M187-A111	MKB662.25-5
1600	3200	25	7.5	S55329-M188-A111	MKB662.25-7.5
1600	3200	40	12	S55329-M189-A111	MKB662.40-12
1600	3200	40	19	S55329-M190-A111	MKB662.40-19
1600	3200	50	31	S55329-M191-A111	MKB662.50-31

MKB662..: AC 24 V, DC 0...10 V / DC 4...20 mA / 0...1000 Ohm

Range overview control device safety function MKC632..

Δp_{max} [kPa]	Δp_s [kPa]	DN	k_{vs} [m³/h]	Stock No.	Product No.
1000	3200	65	49	S55329-M192-A120	MKC632.65-49
700	3200	80	78	S55329-M193-A120	MKC632.80-78
450	3200	100	124	S55329-M194-A120	MKC632.100-124
300	3200	125	200	S55329-M195-A120	MKC632.125-200
200	3200	150	300	S55329-M196-A120	MKC632.150-300

MKC632..: AC 230 V, 3-position

Range overview control device safety function MKC662..

Δp_{max} [kPa]	Δp_s [kPa]	DN	k_{vs} [m³/h]	Stock No.	Product No.
1000	3200	65	49	S55329-M192-A121	MKC662.65-49
700	3200	80	78	S55329-M193-A121	MKC662.80-78
450	3200	100	124	S55329-M194-A121	MKC662.100-124
300	3200	125	200	S55329-M195-A121	MKC662.125-200
200	3200	150	300	S55329-M196-A121	MKC662.150-300

MKC662..: AC 24 V, DC 0...10 V / DC 4...20 mA / 0...1000 Ohm

NEW PRODUCT

Accessories for MK..6..

Product Title	Data sheet	Stock No.	Product No.
Auxiliary switch for SKB6../ SKC6../ SKD6..	N4566	BPZ:ASC1.6	**ASC1.6**
Double auxiliary switch for SKB/ C/ D32../82..	N4561	BPZ:ASC9.3	**ASC9.3**
Potentiometer 0...1000 Ohm for SKB/ C/ D32../82..	N4564	BPZ:ASZ7.3	**ASZ7.3**
Potentiometer 0...135 Ohm for SKB/ C/ D32../82..	N4564	BPZ:ASZ7.31	**ASZ7.31**
Potentiometer 0...200 Ohm for SKB/ C/ D32../82..	N4564	BPZ:ASZ7.32	**ASZ7.32**

2-port and angle valves PN10, to DIN

VDN1../VEN1..

Radiator valves for 2-pipe heating systems for room temperature control. Adjustable flow.
Permissible media: water (to VDI 2035), water with anti-freeze

Data sheet	N2105
Medium temperature	1...120 °C
PN class	PN 10
Δp_{v100}	5...20 kPa
Material, valve body	Brass Ms58, mat nickel-plated
Permissible operating pressure	1000 kPa
Δp_{max}	60 kPa

The valves can be combined with Siemens actuators RTN../SSA../STA..

Range overview straight valves VDN1..

DN	Connecting thread	k_v [m³/h]	Δp_{max} [kPa]	Stock No.	Product No.
10	Rp/R ⅜ "	0.09...0.63	60	BPZ:VDN110	**VDN110**
15	Rp/R ½ "	0.10...0.89	60	BPZ:VDN115	**VDN115**
20	Rp/R ¾ "	0.31...1.41	60	BPZ:VDN120	**VDN120**

Range overview angle valves VEN1..

DN	Connecting thread	k_v [m³/h]	Δp_{max} [kPa]	Stock No.	Product No.
10	Rp/R ⅜ "	0.09...0.63	60	BPZ:VEN110	**VEN110**
15	Rp/R ½ "	0.10...0.89	60	BPZ:VEN115	**VEN115**
20	Rp/R ¾ "	0.31...1.41	60	BPZ:VEN120	**VEN120**

Globe and pressure independent combi valves
Straight and angle threaded valves, PN10, DIN: VDN1.. / VEN1..

Combinable actuator for VDN1.. / VEN1..

Operating voltage	Positioning signal	Positioning time [s]	Color	Cable length [m]	Data sheet	Stock No.	Product No.
					N2111	BPZ:RTN51	**RTN51**
					N4211	BPZ:RTN51G	**RTN51G**
					N2111	BPZ:RTN71	**RTN71**
					N2111	BPZ:RTN81	**RTN81**
AC 230 V	2-position	210	Black	1	N4884	S55174-A101	STA23
AC 230 V	2-position	210	White		N4884	S55174-A110	STA23/00
AC 230 V	2-position	210	Black		N4884	S55174-A118	STA23B/00
AC 230 V	2-position	210	White		N4884	S55174-A114	STA23MP/00
AC 24 V DC 24 V	2-position PDM	270	Black	1	N4884	S55174-A100	STA73
AC 24 V DC 24 V	2-position PDM	270	White		N4884	S55174-A109	STA73/00
AC 24 V DC 24 V	2-position PDM	270	Black		N4884	S55174-A117	STA73B/00
AC 24 V DC 24 V	2-position PDM	270	White		N4884	S55174-A113	STA73MP/00
AC 24 V DC 24 V	2-position PDM/parallel operation	270	White		N4884	S55174-A115	STA73PR/00
AC 230 V	3-position	150	White/Gray	1.5	N4893	BPZ:SSA31	**SSA31**
AC 230 V	3-position	150	White/Gray	1.5	N4893	BPZ:SSA31.1	**SSA31.1**
AC 230 V	3-position	150	White/Gray		N4893	BPZ:SSA31/00	**SSA31/00**
AC 24 V DC 24 V	DC 0...10 V	34	White/Gray	1.5	N4893	BPZ:SSA61	**SSA61**
AC 24 V DC 24 V	DC 0...10 V	34	White/Gray		N4893	BPZ:SSA61/00	**SSA61/00**
AC 24 V	3-position	150	White/Gray	1.5	N4893	BPZ:SSA81	**SSA81**
AC 24 V	3-position	150	White/Gray	1.5	N4893	BPZ:SSA81.1	**SSA81.1**
AC 24 V	3-position	150	White/Gray		N4893	BPZ:SSA81/00	**SSA81/00**
AC 24 V	DC 0...10 V	30	Black	1	N4884	S55174-A104	STA63

For suitable combination of actuator STA.. and connection cable ASY.., see chapter introduction page 7-4.

2-port seat and angle valves PN10, to NF

VDN2../VEN2../VUN2..

Radiator valves for 2-pipe heating systems for room temperature control. Adjustable flow.
Permissible media: water (to VDI 2035), water with anti-freeze

Data sheet	N2106
Medium temperature	1...120 °C
PN class	PN 10
Δp_{v100}	5...20 kPa
Material, valve body	Brass Ms58, mat nickel-plated
Permissible operating pressure	1000 kPa

The valves can be combined with Siemens actuators RTN../SSA.../STA..

Range overview straight valves VDN2..

DN	Connecting thread	k_v [m³/h]	Δp_{max} [kPa]	Stock No.	Product No.
10	Rp/R ⅜ "	0.09...0.63	60	BPZ:VDN210	**VDN210**
15	Rp/R ½ "	0.10...0.89	60	BPZ:VDN215	**VDN215**
20	Rp/R ¾ "	0.31...1.41	60	BPZ:VDN220	**VDN220**

Range overview angle valves VEN2..

DN	Connecting thread	k_v [m³/h]	Δp_{max} [kPa]	Stock No.	Product No.
10	Rp/R ⅜ "	0.09...0.63	60	BPZ:VEN210	**VEN210**
15	Rp/R ½ "	0.10...0.89	60	BPZ:VEN215	**VEN215**
20	Rp/R ¾ "	0.31...1.41	60	BPZ:VEN220	**VEN220**

Range overview reverse angle valves VUN2..

DN	Connecting thread	k_v [m³/h]	Δp_{max} [kPa]	Stock No.	Product No.
10	Rp/R ⅜ "	0.14...0.60	60	BPZ:VUN210	**VUN210**
15	Rp/R ½ "	0.13...0.77	60	BPZ:VUN215	**VUN215**

Globe and pressure independent combi valves
Straight and angle threaded valves, PN10, NF: VDN2.. / VEN2.. / VUN2..

Combinable actuator to VDN2.. / VEN2.. / VUN2..

Operating voltage	Positioning signal	Positioning time [s]	Color	Cable length [m]	Data sheet	Stock No.	Product No.
					N2111	BPZ:RTN51	**RTN51**
					N4211	BPZ:RTN51G	**RTN51G**
					N2111	BPZ:RTN71	**RTN71**
					N2111	BPZ:RTN81	**RTN81**
AC 230 V	2-position	210	Black	1	N4884	S55174-A101	STA23
AC 230 V	2-position	210	White		N4884	S55174-A110	STA23/00
AC 230 V	2-position	210	Black		N4884	S55174-A118	STA23B/00
AC 230 V	2-position	210	White		N4884	S55174-A114	STA23MP/00
AC 24 V DC 24 V	2-position PDM	270	Black	1	N4884	S55174-A100	STA73
AC 24 V DC 24 V	2-position PDM	270	White		N4884	S55174-A109	STA73/00
AC 24 V DC 24 V	2-position PDM	270	Black		N4884	S55174-A117	STA73B/00
AC 24 V DC 24 V	2-position PDM	270	White		N4884	S55174-A113	STA73MP/00
AC 24 V DC 24 V	2-position PDM/parallel operation	270	White		N4884	S55174-A115	STA73PR/00
AC 230 V	3-position	150	White/Gray	1.5	N4893	BPZ:SSA31	**SSA31**
AC 230 V	3-position	150	White/Gray	1.5	N4893	BPZ:SSA31.1	**SSA31.1**
AC 230 V	3-position	150	White/Gray		N4893	BPZ:SSA31/00	**SSA31/00**
AC 24 V DC 24 V	DC 0...10 V	34	White/Gray	1.5	N4893	BPZ:SSA61	**SSA61**
AC 24 V DC 24 V	DC 0...10 V	34	White/Gray		N4893	BPZ:SSA61/00	**SSA61/00**
AC 24 V	3-position	150	White/Gray	1.5	N4893	BPZ:SSA81	**SSA81**
AC 24 V	3-position	150	White/Gray	1.5	N4893	BPZ:SSA81.1	**SSA81.1**
AC 24 V	3-position	150	White/Gray		N4893	BPZ:SSA81/00	**SSA81/00**
AC 24 V	DC 0...10 V	30	Black	1	N4884	S55174-A104	STA63

For suitable combination of actuator STA.. and connection cable ASY.., see chapter introduction page 7-4.

Valve insert for VDN../VEN.. und VUN.. AVN1

Valve insert is suited for use with all types of valves of the VDN../VEN../VUN.. ranges.

Data sheet N2100

Stock No.	Product No.
BPZ:AVN1	**AVN1**

Manual knob, white, for VDN../VEN../VUN../VPD../VPE.. ATN4

For manual adjustment of valve.
The manual knobs are suited for use with all types of valves of the VDN.../VEN.../VUN../VPD... and VPE.. ranges.

Data sheet N2100

Stock No.	Product No.
BPZ:ATN4	**ATN4**

Manual knob, white, RAL9016, for VDN../VEN../VUN../VPD../VPE.. ATN3

For manual adjustment of valve.
The manual knobs are suited for use with all types of valves of the VDN.../VEN.../VUN../VPD... and VPE.. ranges.

Data sheet N2100

Stock No.	Product No.
BPZ:ATN3	**ATN3**

Globe and pressure independent combi valves
Straight and angle lockshield valves: ADN.. / AEN..

ADN../AEN..

Two-port seat and angle lockshield valves

Lockshield valves with throttling function for hydraulic balancing and shut-off function when removing / replacing radiator.
Adjustable flow capacity

Data sheet	N2107
Medium	Water with anti-freeze
Medium temperature	1...120 °C
PN class	PN 10
Material, valve body	Brass Ms58, mat nickel-plated

Range overview straight lockshield valves ADN..

DN	Connecting thread	k_v [m³/h]	Stock No.	Product No.
10	Rp/R ⅜ "	0...1.8	BPZ:ADN10	**ADN10**
15	Rp/R ½ "	0...2.5	BPZ:ADN15	**ADN15**
20	Rp/R ¾ "	0...3.0	BPZ:ADN20	**ADN20**

Range overview angle lockshield valves AEN..

DN	Connecting thread	k_v [m³/h]	Stock No.	Product No.
10	Rp/R ⅜ "	0...1.8	BPZ:AEN10	**AEN10**
15	Rp/R ½ "	0...2.5	BPZ:AEN15	**AEN15**
20	Rp/R ¾ "	0...3.0	BPZ:AEN20	**AEN20**

2-port small valves PN10, DIN, 2.5 mm stroke

VD1..CLC..

Small valves with higher k_v-values, for use in ventilation and air conditioning systems for water-side control of chilled ceilings and terminal units in closed circuits. Adjustable flow capacity.
Permissible media: water (to VDI 2035), water with anti-freeze.

Data sheet	N2103
Medium temperature	1...110 °C
PN class	PN 10
Δp_{v100}	5...20 kPa
Material, valve body	Brass, mat, nickel plated
Stroke	2.5 mm

The valves can be combined with Siemens actuators SSA.../STA..

Range overview straight valves VD1..CLC..

DN	Connecting thread	k_v [m³/h]	Δp_{max} [kPa]	Stock No.	Product No.
15	Rp/R ½ "	0.25...1.9	150	BPZ:VD115CLC	**VD115CLC**
20	Rp/R ¾ "	0.25...2.6	150	BPZ:VD120CLC	**VD120CLC**
25	Rp/R 1 "	0.25...2.6	150	BPZ:VD125CLC	**VD125CLC**

Globe and pressure independent combi valves
Straight valves, PN10, DIN: VD1..CLC..

Combinable actuator to VD1..CLC

Operating voltage	Positioning signal	Positioning time [s]	Color	Cable length [m]	Data sheet	Stock No.	Product No.
					N2111	BPZ:RTN51	**RTN51**
					N4211	BPZ:RTN51G	**RTN51G**
					N2111	BPZ:RTN71	**RTN71**
					N2111	BPZ:RTN81	**RTN81**
AC 230 V	2-position	210	Black	1	N4884	S55174-A101	STA23
AC 230 V	2-position	210	White		N4884	S55174-A110	STA23/00
AC 230 V	2-position	210	Black		N4884	S55174-A118	STA23B/00
AC 230 V	2-position	210	White		N4884	S55174-A114	STA23MP/00
AC 24 V DC 24 V	2-position PDM	270	Black	1	N4884	S55174-A100	STA73
AC 24 V DC 24 V	2-position PDM	270	White		N4884	S55174-A109	STA73/00
AC 24 V DC 24 V	2-position PDM	270	Black		N4884	S55174-A117	STA73B/00
AC 24 V DC 24 V	2-position PDM	270	White		N4884	S55174-A113	STA73MP/00
AC 24 V DC 24 V	2-position PDM/parallel operation	270	White		N4884	S55174-A115	STA73PR/00
AC 230 V	3-position	150	White/Gray	1.5	N4893	BPZ:SSA31	**SSA31**
AC 230 V	3-position	150	White/Gray	1.5	N4893	BPZ:SSA31.1	**SSA31.1**
AC 230 V	3-position	150	White/Gray		N4893	BPZ:SSA31/00	**SSA31/00**
AC 24 V DC 24 V	DC 0...10 V	34	White/Gray	1.5	N4893	BPZ:SSA61	**SSA61**
AC 24 V DC 24 V	DC 0...10 V	34	White/Gray		N4893	BPZ:SSA61/00	**SSA61/00**
AC 24 V	3-position	150	White/Gray	1.5	N4893	BPZ:SSA81	**SSA81**
AC 24 V	3-position	150	White/Gray	1.5	N4893	BPZ:SSA81.1	**SSA81.1**
AC 24 V	3-position	150	White/Gray		N4893	BPZ:SSA81/00	**SSA81/00**
AC 24 V	DC 0...10 V	30	Black	1	N4884	S55174-A104	STA63

For suitable combination of actuator STA.. and connection cable ASY.., see chapter introduction page 7-4.

Compression fittings for copper and soft steel pipes

AVN1..-1..

For connecting copper or soft steel pipes to valves of the VDN../VEN../VUN.. ranges and lockshield valves of the ADN.../AEN... ranges

Data sheet N2100

Range overview compression fittings AVN1..-1..

DN	Connecting thread	Pipe diameter [mm]	Stock No.	Product No.
15	R ½ "	15	BPZ:AVN15-15	**AVN15-15**

Compression fittings plastic pipes with aluminum foil

AVN15A..

For connecting plastic pipes to valves of the VDN../VEN../VUN.. ranges and lockshield valves of the ADN.../AEN... ranges

Data sheet N2100

Range overview compression fittings AVN15A..

DN	Connecting thread	Pipe diameter [mm]	Stock No.	Product No.
15	R ½ "	16	BPZ:AVN15A16	**AVN15A16**

Globe and pressure independent combi valves
2-port threaded valves, PN16: VVP45..

VVP45..

2-port seat valves, PN16

2-port valves with threaded connections for the control of terminal units, chilled ceilings or heating zones.
Suitable media: Water (to VDI 2035), water with anti-freeze.

Data sheet	N4845
Stroke	5.5 mm
Leakage rate	0...0.02 % of k_{vs} value
Medium temperature	1...110 °C
Valve characteristic	Throughport up to k_{vs} 6.3: equal-percentage Throughport from k_{vs} 10: linear
Material, valve body	Red brass CC491K (Rg5)
Material, inside set	CrNi steel / Rg5 / brass
PN class	PN 16
Permissible operating pressure	1600 kPa

V..P45.. valves are only used as mixing or 2-port valves, not as diverting valves.
V..P45..S are suitable for Conex® compression fittings.
VVP45..S and VMP45..S for k_{vs} values 0.63, 1, 1.6, 2.5 m³/h, datasheet N4854.

Range overview 2-port valves VVP45..

SSB.. Δp_{max} [kPa]	SSB.. Δp_s [kPa]	SSC.. Δp_{max} [kPa]	SSC.. Δp_s [kPa]	Connecting thread	DN	k_{vs} [m³/h]	Stock No.	Product No.
400	725	300	300	G ½ B "	10	0.25	BPZ:VVP45.10-0.25	**VVP45.10-0.25**
400	725			G ½ B "	10	0.4	BPZ:VVP45.10-0.4	**VVP45.10-0.4**
400	725			G ½ B "	10	0.63	BPZ:VVP45.10-0.63	**VVP45.10-0.63**
400	725			G ½ B "	10	1	BPZ:VVP45.10-1	**VVP45.10-1**
400	725			G ½ B "	10	1.6	BPZ:VVP45.10-1.6	**VVP45.10-1.6**
350	350			G ¾ B "	15	2.5	BPZ:VVP45.15-2.5	**VVP45.15-2.5**
350	350			G 1 B "	20	4	BPZ:VVP45.20-4	**VVP45.20-4**
300	300			G 1¼ B "	25	6.3	BPZ:VVP45.25-6.3	**VVP45.25-6.3**
		300	300	G 1½ B "	25	10	BPZ:VVP45.25-10	**VVP45.25-10**
		175	175	G 2 B "	32	16	BPZ:VVP45.32-16	**VVP45.32-16**
		75	75	G 2¼ B "	40	25	BPZ:VVP45.40-25	**VVP45.40-25**

Range overview 2-port valves VVP45..S

SSB.. Δp_{max} [kPa]	SSB.. Δp_s [kPa]	Connecting thread	DN	k_{vs} [m³/h]	Stock No.	Product No.
400	725	G ½ B "	10	0.63	BPZ:VVP45.10-0.63S	**VVP45.10-0.63S**
400	725	G ½ B "	10	1	BPZ:VVP45.10-1S	**VVP45.10-1S**
400	725	G ½ B "	10	1.6	BPZ:VVP45.10-1.6S	**VVP45.10-1.6S**
350	350	W 1⅛-14 "	15	2.5	BPZ:VVP45.15-2.5S	**VVP45.15-2.5S**

Field of applications for VVP45..

Medium	Temperature	Operating pressure	Sealing gland
Chilled water Water with anti-freeze Low-temperature hot water	1...110 °C	16 bar ISO 7628	EPDM O-ring

Accessories for VVP45..

Product Title	Stock No.	Product No.
Fittings, pipe-side with threaded connection	BPZ:ALG..	**ALG..**

Combinable actuator for VVP45..

Operating voltage	Positioning signal	Positioning time [s]	Spring return function	Data sheet	Stock No.	Product No.
AC 230 V	3-position	150		N4891	BPZ:SSB31	**SSB31**
AC 24 V DC 24 V	DC 0...10 V	75		N4891	BPZ:SSB61	**SSB61**
AC 24 V	3-position	150		N4891	BPZ:SSB81	**SSB81**
AC 230 V	3-position	150	No	N4895	BPZ:SSC31	**SSC31**
AC 24 V DC 24 V	DC 0...10 V	30	No	N4895	BPZ:SSC61	**SSC61**
AC 24 V DC 24 V	DC 0...10 V	30	Yes (15 s)	N4895	BPZ:SSC61.5	**SSC61.5**
AC 24 V	3-position	150	No	N4895	BPZ:SSC81	**SSC81**

Globe and pressure independent combi valves
2-port threaded valves, PN16: VVP45..N

VVP45..N

Threaded 2-port seat valves, PN16

In ventilation and air-conditioning systems for water-side terminal unit control in closed circuits, e.g. induction units, fan coil units, small reheaters and small re-coolers, for use in
- 2-pipe systems with one heat exchanger for heating and cooling
- 4-pipe systems with two separate heat exchangers for heating and cooling

With threaded connections to ISO 228-1.
For low temperature hot water, chilled water, water with anti-freeze.

Data sheet	N4840
Stroke	5.5 mm
Leakage rate	0...0.1 % of k_{vs} value
Medium temperature	1...110 °C
Valve characteristic	Equal percentage
Material, valve body	Red brass (CC499K)
Material, inside set	CrNi steel, brass
PN class	PN 16
Permissible operating pressure	1600 kPa

Range overview 2-port valves VVP45..N

Connecting thread	Δp_{max} [kPa]	Δp_s [kPa]	DN	k_{vs} [m³/h]	Stock No.	Product No.
G ¾ B "	400	550	15	2.5	BPZ:VVP45.15-2.5N	**VVP45.15-2.5N**
G 1 B "	400	550	20	4	BPZ:VVP45.20-4N	**VVP45.20-4N**
G 1¼ B "	400	500	25	6.3	BPZ:VVP45.25-6.3N	**VVP45.25-6.3N**

Combinable actuators for VVP45..N

Operating voltage	Positioning signal	Positioning time [s]	Data sheet	Stock No.	Product No.
AC 230 V	3-position	150	N4894	BPZ:SSY31	**SSY31**
AC 24 V	3-position	150	N4894	BPZ:SSY81	**SSY81**

2-port valves, PN16

VVP47..

2-port valves with threaded connections for the control of terminal units, chilled ceilings or heating zones.
Suitable media: Water (to VDI 2035), water with anti-freeze.

Data sheet	N4847
Stroke	2.5 mm
Leakage rate	0...0.05 % of k_{vs} value
Leakage rate bypass	0...0.05 % of k_{vs} value
Medium temperature	1...110 °C
Valve characteristic	Throughport: linear Bypass: linear
Material, valve body	Red brass CC491K (Rg5)
Material, inside set	CrNi steel, brass
PN class	PN 16
Permissible operating pressure	1600 kPa

Range overview 3-port VVP47..

Connecting thread	DN	k_{vs} [m³/h]	Stock No.	Product No.
G ½ B "	10	0.25	BPZ:VVP47.10-0.25	**VVP47.10-0.25**
G ½ B "	10	0.4	BPZ:VVP47.10-0.4	**VVP47.10-0.4**
G ½ B "	10	0.63	BPZ:VVP47.10-0.63	**VVP47.10-0.63**
G ½ B "	10	1	BPZ:VVP47.10-1	**VVP47.10-1**
G ½ B "	10	1.6	BPZ:VVP47.10-1.6	**VVP47.10-1.6**
G ¾ B "	15	2.5	BPZ:VVP47.15-2.5	**VVP47.15-2.5**
G 1 B "	20	4	BPZ:VVP47.20-4	**VVP47.20-4**

7

Range overview 3-port VVP47..S

Connecting thread	DN	k_{vs} [m³/h]	Stock No.	Product No.
G ½ B "	10	0.63	BPZ:VVP47.10-0.63S	**VVP47.10-0.63S**
G ½ B "	10	1	BPZ:VVP47.10-1S	**VVP47.10-1S**
G ½ B "	10	1.6	BPZ:VVP47.10-1.6S	**VVP47.10-1.6S**
W11/8-14	15	2.5	BPZ:VVP47.15-2.5S	**VVP47.15-2.5S**

Overview differential pressures

SFP../SSP.. Δp_s [kPa]	SFP../SSP.. Δp_{max} [kPa]	STP.. Δp_s [kPa]	STP.. Δp_{max} [kPa]	Product No.
1000	400	700	400	**VVP47.10-0.25**
1000	400	700	400	**VVP47.10-0.4**
500	400	250	250	**VVP47.10-0.63**
500	400	250	250	**VVP47.10-1**
300	300	150	150	**VVP47.10-1.6**
300	300	150	150	**VVP47.15-2.5**
175	175	100	100	**VVP47.20-4**

Globe and pressure independent combi valves
2-port threaded valves, PN16: VVP47..

Combinable actuator to VVP47..

Operating voltage	Positioning signal	Positioning time [s]	Color	Cable length [m]	Data sheet	Stock No.	Product No.
AC 230 V	3-position	150	White/Gray	1.5	N4864	BPZ:SSP31	**SSP31**
AC 230 V	2-position	210	Black	1	N4884	S55174-A103	STP23
AC 230 V	2-position	210	White		N4884	S55174-A112	STP23/00
AC 230 V	2-position	210	Black		N4884	S55174-A120	STP23B/00
AC 230 V	2-position	10	Gray	1.8	N4865	BPZ:SFP21/18	**SFP21/18**
AC 24 V DC 24 V	DC 0...10 V	34	White/Gray	1.5	N4864	BPZ:SSP61	**SSP61**
AC 24 V	DC 0...10 V	30	Black	1	N4884	S55174-A105	STP63
AC 24 V	3-position	150	White/Gray	1.5	N4864	BPZ:SSP81	**SSP81**
AC 24 V	3-position	43	White/Gray	1.5	N4864	BPZ:SSP81.04	**SSP81.04**
AC 24 V	2-position	10	Gray	1.8	N4865	BPZ:SFP71/18	**SFP71/18**
AC 24 V DC 24 V	2-position PDM	270	Black	1	N4884	S55174-A102	STP73
AC 24 V DC 24 V	2-position PDM/parallel operation	270	White		N4884	S55174-A116	STP73PR/00
AC 24 V DC 24 V	2-position PDM	270	White		N4884	S55174-A111	STP73/00
AC 24 V DC 24 V	2-position PDM	270	Black		N4884	S55174-A119	STP73B/00

For suitable combination of actuator STA.. and connection cable ASY.., see chapter introduction page 7-4.

2-port zone valves, PN16 with on/off characteristic

VVI46..

2-port valves, internally threaded connections, for the control of zones or terminal units. Suitable media: water (to VDE 2035), water with anti-freeze.

Data sheet	N4842
Stroke	2.5 mm
Leakage rate	0...0.05% of k_{vs} value
Leakage rate bypass	
Medium temperature	1...110 °C
Permissible operating pressure	1600 kPa
Material, valve body	Hot-pressed brass
Material, inside set	Stainless steel, brass
Mounting position	Upright to horizontal
PN class	PN 16
Valve characteristic	Non-linear (on/off)

Range overview 2-port internally threaded valves VVI46..

Connecting thread	DN	k_{vs} [m³/h]	Stock No.	Product No.
Rp ½ "	15	2	BPZ:VVI46.15	**VVI46.15**
Rp ¾ "	20	3.5	BPZ:VVI46.20	**VVI46.20**
Rp 1 "	25	5	BPZ:VVI46.25	**VVI46.25**
Rp ½ "	15	2	S55249-V100	**VVI46.15/1**
Rp ¾ "	20	3.5	S55249-V101	**VVI46.20/1**
Rp 1 "	25	5	S55249-V102	**VVI46.25/1**

Overview differential pressures

SUA21.. Δp_{max} [kPa]	SUA21.. Δp_s [kPa]	SFA.. Δp_{max} [kPa]	SFA.. Δp_s [kPa]	SSA31.04 Δp_{max} [kPa]	SSA31.04 Δp_s [kPa]	STA.. Δp_{max} [kPa]	STA.. Δp_s [kPa]	Stock No.	Product No.
300	300	300	300	200	200	200	200	BPZ:VVI46.15	**VVI46.15**
300	300	300	300	200	200	200	200	BPZ:VVI46.20	**VVI46.20**
200	200	200	200	200	200	200	200	BPZ:VVI46.25	**VVI46.25**
300	300	300	300	200	200	200	200	S55249-V100	**VVI46.15/1**
300	300	300	300	200	200	200	200	S55249-V101	**VVI46.20/1**
200	200	200	200	200	200	200	200	S55249-V102	**VVI46.25/1**

To ensure noiseless operation, Δp_{max} should not exceed 100 kPa.

Globe and pressure independent combi valves
2-port threaded valves, PN16: VVI46..

Combinable actuator to VVI46..

Operating voltage	Positioning signal	Positioning time [s]	Color	Cable length [m]	Data sheet	Stock No.	Product No.
AC 230 V	2-position	10		1.8	N4863	BPZ:SFA21/18	**SFA21/18**
AC 24 V	2-position	10		1.8	N4863	BPZ:SFA71/18	**SFA71/18**
AC 230 V	3-position SPDT	43		1.5	N4860	BPZ:SSA31.04	**SSA31.04**
AC 230 V	2-position	210	Black	1	N4884	S55174-A101	STA23
AC 230 V	2-position	210	White		N4884	S55174-A110	STA23/00
AC 230 V	2-position	210	Black		N4884	S55174-A118	STA23B/00
AC 230 V	2-position	210	White		N4884	S55174-A114	STA23MP/00
AC 24 V DC 24 V	2-position PDM	270	Black	1	N4884	S55174-A100	STA73
AC 24 V DC 24 V	2-position PDM	270	White		N4884	S55174-A109	STA73/00
AC 24 V DC 24 V	2-position PDM	270	Black		N4884	S55174-A117	STA73B/00
AC 24 V DC 24 V	2-position PDM	270	White		N4884	S55174-A113	STA73MP/00
AC 230 V	2-position (SPST)	10 s @ 50 Hz	Gray	10 s @ 50 Hz	N4830	S55176-A102	**SUA21/1**

For suitable combination of actuator STA.. and connection cable ASY.., see chapter introduction page 7-4.

Internal threaded two-port Valve

C/VVI41..

- With internally threaded connections Rp.. to ISO 7-1
- For chilled water, low pressure hot water and saturated steam in open and closed circuits

Data sheet	N4362
Stroke	20 mm
Leakage rate	0...0.02 % of k_{vs} value
Medium temperature	-25...150 °C
Valve characteristic	Equal-percentage
Rangeability	DN 15: >50 DN 20...50: >100
Permissible operating pressure	1600 kPa
Material, valve body	Bronze CC491K (Rg5)
Material, inside set	CrNi Steel/ Rg 5 brass
PN class	PN 16

Range overview 2-port valves C/VVI41..

SAX.. Δp_{max} [kPa]	SAX.. Δp_s [kPa]	SKD.. Δp_{max} [kPa]	SKD.. Δp_s [kPa]	DN	Connecting thread	k_{vs} [m³/h]	Stock No.	Product No.
400	1600	400	1600	15	Rp ½ "	2.5	BPZ:C/VVI41.15-2.5	**C/VVI41.15-2.5**
400	1600	400	1600	15	Rp ½ "	4.0	BPZ:C/VVI41.15-4	**C/VVI41.15-4**
400	1600	400	1600	20	Rp ¾ "	6.3	BPZ:C/VVI41.20-6.3	**C/VVI41.20-6.3**
400	1550	400	1600	25	Rp 1 "	10	BPZ:C/VVI41.25-10	**C/VVI41.25-10**
400	875	400	1275	32	Rp 1¼ "	16	BPZ:C/VVI41.32-16	**C/VVI41.32-16**
400	525	400	775	40	Rp 1½ "	25	BPZ:C/VVI41.40-25	**C/VVI41.40-25**
300	300	400	450	50	Rp 2 "	40	BPZ:C/VVI41.50-40	**C/VVI41.50-40**

Replacement sealing gland for C/VVI41..

VXG41.., DN15...50: part no. 4 284 8874 0

Field of application for C/VVI41..

Medium	Temperature	Operating pressure	Sealing gland	Suffix
Chilled water Cooling water Brine Water with anti-freeze Low-temperature hot water High-temperature hot water	-25...150 °C	16 bar ISO 7005	EPDM O-ring, silicone-free grease	
Saturated steam / Super-heated steam	≤ 150 °C	16 bar ISO 7005	EPDM O-ring, silicone-free grease	

For media < 0°C, stem heating element ASZ6.5 or ASZ6.6 is required.

Accessories for C/VVI41..

Product Title	Stock No.	Product No.
Fittings, pipe-side with threaded connection	BPZ:ALG..	**ALG..**

Globe and pressure independent combi valves
2-port threaded valves, PN16: C/VVI41..

Combinable actuator for C/VVI41..

Operating voltage	Positioning signal	Positioning time [s]	Spring return function	Data sheet	Stock No.	Product No.
AC 230 V	3-position	120	no	N4501	S55150-A105	**SAX31.00**
AC 230 V	3-position	30	no	N4501	S55150-A106	**SAX31.03**
AC 24 V DC 24 V	DC 0...10 V DC 4...20 mA 0...1000 Ohm	30	no	N4501	S55150-A100	**SAX61.03**
AC 230 V	3-position	120	No	N4561	BPZ:SKD32.50	**SKD32.50**
AC 230 V	3-position	120	Yes (8 s)	N4561	BPZ:SKD32.51	**SKD32.51**
AC 230 V	3-position	Open 30 Close 10	Yes (8 s)	N4561	BPZ:SKD32.21	**SKD32.21**
AC 24 V	DC 0...10 V DC 4...20 mA 0...1000 Ohm	Open 30 Close 15	No	N4561	BPZ:SKD60	**SKD60**
AC 24 V	DC 0...10 V DC 4...20 mA 0...1000 Ohm	Open 30 Close 15	Yes (15 s)	N4561	BPZ:SKD62	**SKD62**

Further information to the actuators please see "Actuators for valves with 20 mm stroke"
3-position actuators are also available as AC 24 V version, see "Actuators for valves with 20 mm stroke".

On/off 2-port valve with spring return

MVI421..

Control valve for use with terminal units for heating and cooling zones. The actuators are equipped with a manual lever and spring return facility (valve closed). 1 auxiliary switch is available as an accessory item.

Data sheet	N4867
Stroke	2.5 mm
Leakage rate	0.05% of k_{vs} value
Leakage rate bypass	2...5 % of k_{vs} value
Medium temperature	1...110 °C
Operating voltage	AC 230 V
Positioning signal	2-position
Positioning time	10 s
Power consumption	12 VA
Degree of protection	IP30
Ambient temperature range	1...50 °C
Positioning force	200 N
Mounting position	Upright up to 85° inclined
Material, valve body	Brass
Material, inside set	Stainless steel/brass/bronze Rg5

Range overview of MVI421..

DN	Connecting thread	k_{vs} [m³/h]	Δp_{max} [kPa]	Δp_s [kPa]	Stock No.	Product No.
15	Rp 1/2	2.0	300	300	BPZ:MVI421.15	**MVI421.15**
20	Rp 3/4	3.5	300	300	BPZ:MVI421.20	**MVI421.20**
25	Rp 1	5.0	300	300	BPZ:MVI421.25	**MVI421.25**

Range overview of MVI421..

Product Title	Data sheet	Stock No.	Product No.
Auxiliary switch for SFA21.../ SFA71.../ SFP21.../ SFP71...	N4863	BPZ:ASC2.1/18	**ASC2.1/18**

Globe and pressure independent combi valves
2-port threaded valves, PN16: VVG41..

VVG41..

2-port seat valves PN16 with externally threaded connections

- With threaded connections to ISO 228/1
- For cooling, chilled, low and high temperature water, brine and saturated and superheated steam in open and closed circuits

Data sheet	N4363
Stroke	20 mm
Leakage rate	0...0.02 % of k_{vs} value
Medium temperature	-25...150 °C
Valve characteristic	Equal percentage
Rangeability	DN 15: >50 DN 20...50: >100
Permissible operating pressure	1600 kPa
Material, valve body	Bronze CuSn5Zn5Pb2 (CC499K)
Material, inside set	CrNi steel
PN class	PN 16

Range overview 2-port valves VVG41..

SAX.. Δp_{max} [kPa]	SAX.. Δp_s [kPa]	SKD.. Δp_{max} [kPa]	SKD.. Δp_s [kPa]	SKB.. Δp_{max} [kPa]	SKB.. Δp_s [kPa]	Connecting thread	DN	k_{vs} [m³/h]	Stock No.	Product No.
800	1600	800	1600	800	1600	G 1 B "	15	0.63	BPZ:VVG41.11	**VVG41.11**
800	1600	800	1600	800	1600	G 1 B "	15	1	BPZ:VVG41.12	**VVG41.12**
800	1600	800	1600	800	1600	G 1 B "	15	1.6	BPZ:VVG41.13	**VVG41.13**
800	1600	800	1600	800	1600	G 1 B "	15	2.5	BPZ:VVG41.14	**VVG41.14**
800	1600	800	1600	800	1600	G 1 B "	15	4	BPZ:VVG41.15	**VVG41.15**
800	1600	800	1600	800	1600	G 1¼ B "	20	6.3	BPZ:VVG41.20	**VVG41.20**
800	1550	800	1600	800	1600	G 1½ B "	25	10	BPZ:VVG41.25	**VVG41.25**
800	875	800	1275	800	1600	G 2 B "	32	16	BPZ:VVG41.32	**VVG41.32**
525	525	775	775	800	1600	G 2¼ B "	40	25	BPZ:VVG41.40	**VVG41.40**
300	300	450	450	800	1225	G 2¾ B "	50	40	BPZ:VVG41.50	**VVG41.50**

ALG..2 fittings must be ordered as individual items and will be delivered seperately.

Replacement sealing gland for VVG41..

VVG41.., DN15...50: part no. 4 284 8874 0

Field of application for VVG41..

Medium	Temperature	Operating pressure	Sealing gland
Chilled water Cooling water Brine Water with anti-freeze Low-temperature hot water High-temperature hot water	-25...150 °C	16 bar ISO 7005	EPDM O-ring, silicone-free grease
Saturated steam / Superheated steam	≤ 150 °C	3 bar abs	EPDM O-ring, silicone-free grease

For media < 0°C, stem heating element ASZ6.5 or ASZ6.6 is required.

Accessories for VVG41..

Product Title	Stock No.	Product No.
Fittings, pipe-side with threaded connection	BPZ:ALG..	**ALG..**

Combinable actuator for VVG41..

Operating voltage	Positioning signal	Positioning time [s]	Spring return function	Data sheet	Stock No.	Product No.
AC 230 V	3-position	120	no	N4501	S55150-A105	**SAX31.00**
AC 230 V	3-position	30	no	N4501	S55150-A106	**SAX31.03**
AC 24 V DC 24 V	DC 0...10 V DC 4...20 mA 0...1000 Ohm	30	no	N4501	S55150-A100	**SAX61.03**
AC 230 V	3-position	120	No	N4561	BPZ:SKD32.50	**SKD32.50**
AC 230 V	3-position	120	Yes (8 s)	N4561	BPZ:SKD32.51	**SKD32.51**
AC 230 V	3-position	Open 30 Close 10	Yes (8 s)	N4561	BPZ:SKD32.21	**SKD32.21**
AC 24 V	DC 0...10 V DC 4...20 mA 0...1000 Ohm	Open 30 Close 15	No	N4561	BPZ:SKD60	**SKD60**
AC 24 V	DC 0...10 V DC 4...20 mA 0...1000 Ohm	Open 30 Close 15	Yes (15 s)	N4561	BPZ:SKD62	**SKD62**
AC 230 V	3-position	120	No	N4564	BPZ:SKB32.50	**SKB32.50**
AC 230 V	3-position	120	Yes (10 s)	N4564	BPZ:SKB32.51	**SKB32.51**
AC 24 V	DC 0...10 V 4...20 mA 0...1000 Ohm	Open 120 Close 10	No	N4564	BPZ:SKB60	**SKB60**
AC 24 V	DC 0...10 V 4...20 mA 0...1000 Ohm	Open 120 Close 10	Yes (10 s)	N4564	BPZ:SKB62	**SKB62**

Further information to the actuators please see "Actuators for valves with 20 mm stroke"
3-position actuators are also available as AC 24 V version, see "Actuators for valves with 20 mm stroke".

Globe and pressure independent combi valves
2-port threaded valves, PN16: VVG44..

VVG44..

2-port seat valves PN16 with externally threaded connections

- With threaded connections to ISO 228/1
- For chilled water and low-temperature hot water in closed circuits

Data sheet	N4364
Stroke	5.5 mm
Leakage rate	0...0.02 % of k_{vs} value
Medium temperature	1...120 °C
Valve characteristic	Linear
Rangeability	From DN 20: >100 DN 15: >50...100
Permissible operating pressure	1600 kPa
Material, valve body	Red brass CC491K (Rg5)
Material, inside set	CrNi steel / Rg5, brass
PN class	PN 16

Range overview 2-port valves VVG44..

Δp_{max} [kPa]	Δp_s [kPa]	Connecting thread	DN	k_{vs} [m³/h]	Stock No.	Product No.
400	1600	G 1 B "	15	0.25	BPZ:VVG44.15-0.25	**VVG44.15-0.25**
400	1600	G 1 B "	15	0.4	BPZ:VVG44.15-0.4	**VVG44.15-0.4**
400	1600	G 1 B "	15	0.63	BPZ:VVG44.15-0.63	**VVG44.15-0.63**
400	725	G 1 B "	15	1	BPZ:VVG44.15-1	**VVG44.15-1**
400	725	G 1 B "	15	1.6	BPZ:VVG44.15-1.6	**VVG44.15-1.6**
400	400	G 1 B "	15	2.5	BPZ:VVG44.15-2.5	**VVG44.15-2.5**
400	400	G 1 B "	15	4	BPZ:VVG44.15-4	**VVG44.15-4**
400	750	G 1¼ B "	20	6.3	BPZ:VVG44.20-6.3	**VVG44.20-6.3**
400	400	G 1½ B "	25	10	BPZ:VVG44.25-10	**VVG44.25-10**
250	250	G 2 B "	32	16	BPZ:VVG44.32-16	**VVG44.32-16**
125	125	G 2¼ B "	40	25	BPZ:VVG44.40-25	**VVG44.40-25**

Δp_{max}/Δp_s-ratings refer to actuators SQS35/65/85 of the D-series with a positioning force of 400 N.
Fittings ALG..2 must be ordered as separae items and are also supplied as such.

Field of application for VVG44..

Medium	Temperature	Operating pressure	Sealing gland
Chilled water Water with anti-freeze Low-temperature hot water	1...120 °C	16 bar ISO 7005	EPDM O-ring

Accessories for VVG44..

Product Title	Stock No.	Product No.
Fittings, pipe-side with threaded connection	BPZ:ALG..	**ALG..**

Combinable actuator to VVG44..

Operating voltage	Positioning signal	Positioning time [s]	Spring return function	Data sheet	Stock No.	Product No.
AC 230 V	3-position	150	No	N4573	BPZ:SQS35.00	**SQS35.00**
AC 230 V	3-position	35	No	N4573	BPZ:SQS35.03	**SQS35.03**
AC 230 V	3-position	150	Yes (8 s)	N4573	BPZ:SQS35.50	**SQS35.50**
AC 230 V	3-position	35	Yes (8 s)	N4573	BPZ:SQS35.53	**SQS35.53**
AC 24 V	3-position	150	No	N4573	BPZ:SQS85.00	**SQS85.00**
AC 24 V	3-position	35	No	N4573	BPZ:SQS85.03	**SQS85.03**
AC 24 V	DC 0...10 V 0...1000 Ohm	35	No	N4573	BPZ:SQS65	**SQS65**
AC 24 V	DC 2...10 V 0...1000 Ohm	35	No	N4573	BPZ:SQS65.2	**SQS65.2**
AC 24 V	DC 0...10 V 0...1000 Ohm	35	Yes (8 s)	N4573	BPZ:SQS65.5	**SQS65.5**

Further information to the actuators please see "Actuators for threaded valves with 5.5 mm stroke"

Globe and pressure independent combi valves
2-port threaded valves, PN25: VVG55..

VVG55..

2-port seat valves PN25 with externally threaded connections

- With threaded connections to ISO 228/1
- For chilled water and low-temperature hot water in closed circuits, especially for district heat applications

Data sheet	N4379
Stroke	5.5 mm
Leakage rate	0...0.02 % of k_{vs} value
Medium temperature	1...130 °C
Valve characteristic	Equal percentage
Rangeability	From DN 20: >100 DN 15: >50...100
Permissible operating pressure	2500 kPa
Material, valve body	Red brass CC491K (Rg5)
Material, inside set	CrNi steel
PN class	PN 25

Range overview 2-port valves VVG55..

Δp_{max} [kPa]	Δp_s [kPa]	Connecting thread	DN	k_{vs} [m³/h]	Stock No.	Product No.
1200	2500	G ¾ B "	15	0.25	BPZ:VVG55.15-0.25	**VVG55.15-0.25**
1200	2500	G ¾ B "	15	0.4	BPZ:VVG55.15-0.4	**VVG55.15-0.4**
1200	2500	G ¾ B "	15	0.63	BPZ:VVG55.15-0.63	**VVG55.15-0.63**
1200	2000	G ¾ B "	15	1	BPZ:VVG55.15-1	**VVG55.15-1**
1200	2000	G ¾ B "	15	1.6	BPZ:VVG55.15-1.6	**VVG55.15-1.6**
1200	2000	G ¾ B "	15	2.5	BPZ:VVG55.15-2.5	**VVG55.15-2.5**
1000	1000	G 1 B "	20	4	BPZ:VVG55.20-4	**VVG55.20-4**
800	800	G 1¼ B "	25	6.3	BPZ:VVG55.25-6.3	**VVG55.25-6.3**

Field of application for VVG55..

Medium	Temperature	Operating pressure	Sealing gland
Chilled water Water with oxygen-binding additives Water with anti-freeze Low-temperature hot water High-temperature hot water	1...130 °C	25 bar ISO 7005	EPDM O-ring

Accessories for VVG55..

Product Title	Stock No.	Product No.
Fittings, pipe-side with threaded connection	BPZ:ALG..	**ALG..**
Fittings, pipeside with welding connection	BPZ:ALS..	**ALS..**

Combinable actuator to VVG55..

Operating voltage	Positioning signal	Positioning time [s]	Spring return function	Data sheet	Stock No.	Product No.
AC 230 V	3-position	150	No	N4573	BPZ:SQS35.00	**SQS35.00**
AC 230 V	3-position	35	No	N4573	BPZ:SQS35.03	**SQS35.03**
AC 230 V	3-position	150	Yes (8 s)	N4573	BPZ:SQS35.50	**SQS35.50**
AC 230 V	3-position	35	Yes (8 s)	N4573	BPZ:SQS35.53	**SQS35.53**
AC 24 V	3-position	150	No	N4573	BPZ:SQS85.00	**SQS85.00**
AC 24 V	3-position	35	No	N4573	BPZ:SQS85.03	**SQS85.03**
AC 24 V	DC 0...10 V 0...1000 Ohm	35	No	N4573	BPZ:SQS65	**SQS65**
AC 24 V	DC 2...10 V 0...1000 Ohm	35	No	N4573	BPZ:SQS65.2	**SQS65.2**
AC 24 V	DC 0...10 V 0...1000 Ohm	35	Yes (8 s)	N4573	BPZ:SQS65.5	**SQS65.5**

Fittings with weldable connections: Set of 2

Cylindric thread to ISO 228-1 on valve side. Welded connection on the pipe side.
Each ALS.. set consists of 2 cap nuts, 2 inserts and 2 flat seals.

Connecting thread, valve side	Pipe diameter	Material	Stock No.	Product No.
G ¾ "	21.3 mm	Weldable steel	BPZ:ALS152	**ALS152**
G 1 "	26.8 mm	Weldable steel	BPZ:ALS202	**ALS202**
G 1¼ "	33.7 mm	Weldable steel	BPZ:ALS252	**ALS252**

Fittings with threaded connections: Set of 2

Cylindric thread to ISO 228-1 on the valve side. Tapered R-externally or cylindrical Rp-internally threaded to ISO 7-1 on the pipe side.
Each fitting set ALG..2 consists of 2 cap nuts, 2 insert nuts and 2 flat seals.

Connecting thread, valve side	Connecting thread, pipe side	Material	Stock No.	Product No.
G ½ "	R ⅜ "	Brass	BPZ:ALG132	**ALG132**
G ¾ "	R ½ "	Brass	BPZ:ALG142	**ALG142**
G ¾ "	Rp ⅜ "	Malleable cast iron, phosphated	BPZ:ALG122	**ALG122**
G 1 "	Rp ½ "	Phosphated malleable cast iron	BPZ:ALG152	**ALG152**
G 1 "	Rp ½ "	Brass	S55846-Z100	**ALG152B**
G 1¼ "	Rp ¾ "	Phosphated malleable cast iron	BPZ:ALG202	**ALG202**
G 1¼ "	Rp ¾ "	Brass	S55846-Z102	**ALG202B**
G 1½ "	Rp 1 "	Phosphated malleable cast iron	BPZ:ALG252	**ALG252**
G 1½ "	Rp 1 "	Brass	S55846-Z104	**ALG252B**
G 2 "	Rp 1¼ "	Phosphated malleable cast iron	BPZ:ALG322	**ALG322**
G 2 "	Rp 1¼ "	Brass	S55846-Z106	**ALG322B**
G 2¼ "	Rp 1½ "	Phosphated malleable cast iron	BPZ:ALG402	**ALG402**
G 2¼ "	Rp 1½ "	Brass	S55846-Z108	**ALG402B**
G 2¾ "	Rp 2 "	Phosphated malleable cast iron	BPZ:ALG502	**ALG502**
G 2¾ "	Rp 2 "	Brass	S55846-Z110	**ALG502B**

Fittings with threaded connections: Set of 3

Cylindric thread to ISO 228-1 on the valve side. Tapered R-externally or cylindrical Rp-internally threaded to ISO 7-1 on the pipe side.
Each fitting set ALG..3 consists of 3 cap nuts, 3 insert nuts and 3 flat seals.

Connecting thread, valve side	Connecting thread, pipe side	Material	Stock No.	Product No.
G ½ "	R ⅜ "	Brass	BPZ:ALG133	**ALG133**
G ¾ "	R ½ "	Brass	BPZ:ALG143	**ALG143**
G ¾ "	Rp ⅜ "	Malleable cast iron, phosphated	BPZ:ALG123	**ALG123**
G 1 "	Rp ½ "	Phosphated malleable cast iron	BPZ:ALG153	**ALG153**
G 1 "	Rp ½ "	Brass	S55846-Z101	**ALG153B**
G 1¼ "	Rp ¾ "	Phosphated malleable cast iron	BPZ:ALG203	**ALG203**
G 1¼ "	Rp ¾ "	Brass	S55846-Z103	**ALG203B**
G 1½ "	Rp 1 "	Phosphated malleable cast iron	BPZ:ALG253	**ALG253**
G 1½ "	Rp 1 "	Brass	S55846-Z105	**ALG253B**
G 2 "	Rp 1¼ "	Phosphated malleable cast iron	BPZ:ALG323	**ALG323**
G 2 "	Rp 1¼ "	Brass	S55846-Z107	**ALG323B**
G 2¼ "	Rp 1½ "	Phosphated malleable cast iron	BPZ:ALG403	**ALG403**
G 2¼ "	Rp 1½ "	Brass	S55846-Z109	**ALG403B**
G 2¾ "	Rp 2 "	Phosphated malleable cast iron	BPZ:ALG503	**ALG503**
G 2¾ "	Rp 2 "	Brass	S55846-Z111	**ALG503B**

Applications requiring union fittings with DVGW approval must be delivered by thirds.

Globe and pressure independent combi valves
3-port flanged valves, PN6: VXF21..

VXF21..

3-port seat valves PN6 with flanged connections

- With flanged connections to ISO 7005
- For chilled, low and high temperature water and brine in closed circuits

Data sheet	N4410
Stroke	To DN 80: 20 mm From DN 100: 40 mm
Leakage rate	0...0.02 % of k_{vs} value
Leakage rate bypass	0.5...2 % of k_{vs} value
Medium temperature	-10...150 °C
Valve characteristic	Throughport: equal-percentage Bypass: linear
Rangeability	DN 25...40: >50 DN 50...100: >100
Permissible operating pressure	600 kPa
Material, valve body	Cast iron EN-GJL-250/EN-GJL-HB 215
Material, inside set	< DN 40: CrNi steel/brass > DN 50: CrNi steel/Rg5
PN class	PN 6

Range overview 3-port valves VXF21..

SAX.. Δp_{max} [kPa]	SKD.. Δp_{max} [kPa]	SKB.. Δp_{max} [kPa]	SKC.. Δp_{max} [kPa]	DN	k_{vs} [m³/h]	Stock No.	Product No.
300	300	300		25	1.9	BPZ:VXF21.22	**VXF21.22**
300	300	300		25	2.5	BPZ:VXF21.25-2.5	**VXF21.25-2.5**
300	300	300		25	3	BPZ:VXF21.23	**VXF21.23**
300	300	300		25	4	BPZ:VXF21.25-4	**VXF21.25-4**
300	300	300		25	5	BPZ:VXF21.24	**VXF21.24**
300	300	300		25	6.3	BPZ:VXF21.25-6.3	**VXF21.25-6.3**
300	300	300		25	7.5	BPZ:VXF21.25	**VXF21.25**
300	300	300		25	10	BPZ:VXF21.25-10	**VXF21.25-10**
300	300	300		40	12	BPZ:VXF21.39	**VXF21.39**
300	300	300		40	16	BPZ:VXF21.40-16	**VXF21.40-16**
300	300	300		40	19	BPZ:VXF21.40	**VXF21.40**
300	300	300		40	25	BPZ:VXF21.40-25	**VXF21.40-25**
300	300	300		50	31	BPZ:VXF21.50	**VXF21.50**
300	300	300		50	40	BPZ:VXF21.50-40	**VXF21.50-40**
175	275	300		65	49	BPZ:VXF21.65	**VXF21.65**
175	275	300		65	63	BPZ:VXF21.65-63	**VXF21.65-63**
100	175	300		80	78	BPZ:VXF21.80	**VXF21.80**
100	175	300		80	100	BPZ:VXF21.80-100	**VXF21.80-100**
			200	100	124	BPZ:VXF21.90	**VXF21.90**
			200	100	160	BPZ:VXF21.100-160	**VXF21.100-160**

Δp_{max}-ratings are valid for mixing applications.

Replacement sealing glands for VXF21..:

VVF/VXF21.., DN25...DN80: part no. 4 284 8806 0
VVF/VXF21.., DN100: part no. 4 679 5629 0

Field of application for VXF21..

Medium	Temperature	Operating pressure	Sealing gland
Chilled water Brine Water with anti-freeze Low-temperature hot water	-10...150 °C	6 bar ISO 7005	EPDM O-ring, silicone-free grease

For media < 0°C, stem heating element ASZ6.5 or ASZ6.6 is required.

Combinable actuator to VXF21..

Operating voltage	Positioning signal	Positioning time [s]	Spring return function	Data sheet	Stock No.	Product No.
AC 230 V	3-position	120	no	N4501	S55150-A105	**SAX31.00**
AC 230 V	3-position	30	no	N4501	S55150-A106	**SAX31.03**
AC 24 V DC 24 V	DC 0...10 V DC 4...20 mA 0...1000 Ohm	30	no	N4501	S55150-A100	**SAX61.03**
AC 230 V	3-position	120	No	N4561	BPZ:SKD32.50	**SKD32.50**
AC 230 V	3-position	120	Yes (8 s)	N4561	BPZ:SKD32.51	**SKD32.51**
AC 230 V	3-position	Open 30 Close 10	Yes (8 s)	N4561	BPZ:SKD32.21	**SKD32.21**
AC 24 V	DC 0...10 V DC 4...20 mA 0...1000 Ohm	Open 30 Close 15	No	N4561	BPZ:SKD60	**SKD60**
AC 24 V	DC 0...10 V DC 4...20 mA 0...1000 Ohm	Open 30 Close 15	Yes (15 s)	N4561	BPZ:SKD62	**SKD62**
AC 230 V	3-position	120	No	N4564	BPZ:SKB32.50	**SKB32.50**
AC 230 V	3-position	120	Yes (10 s)	N4564	BPZ:SKB32.51	**SKB32.51**
AC 24 V	DC 0...10 V 4...20 mA 0...1000 Ohm	Open 120 Close 10	No	N4564	BPZ:SKB60	**SKB60**
AC 24 V	DC 0...10 V 4...20 mA 0...1000 Ohm	Open 120 Close 10	Yes (10 s)	N4564	BPZ:SKB62	**SKB62**
AC 230 V	3-position	120	No	N4566	BPZ:SKC32.60	**SKC32.60**
AC 230 V	3-position	120	Yes (18 s)	N4566	BPZ:SKC32.61	**SKC32.61**
AC 24 V	DC 0...10 V 4...20 mA 0...1000 Ohm	Open 120 Close 20	No	N4566	BPZ:SKC60	**SKC60**
AC 24 V	DC 0...10 V 4...20 mA 0...1000 Ohm	Open 120 Close 20	Yes (20 s)	N4566	BPZ:SKC62	**SKC62**

Globe and pressure independent combi valves
3-port flanged valves, PN10: VXF31..

VXF31..

3-port seat valves PN10 with flanged connections

- With flanged connections to ISO 7005
- For chilled, low and high temperature water and brine in closed circuits

Data sheet	N4420
Stroke	To DN 80: 20 mm From DN 100: 40 mm
Leakage rate	0...0.02 % of k_{vs} value
Leakage rate bypass	0.5...0.2% of k_{vs} value
Medium temperature	-10...150 °C
Valve characteristic	Throughport: equal-percentage Bypass: linear
Rangeability	DN 25...40: >50 DN 50...150: >100
Permissible operating pressure	1000 kPa
Material, valve body	Cast iron EN-GJL-250
Material, inside set	< DN 40: CrNi steel/brass > DN 50: CrNi steel/Rg5
PN class	PN 10

Range overview 3-port valves VXF31..

SAX.. Δp_{max} [kPa]	SKD.. Δp_{max} [kPa]	SKB.. Δp_{max} [kPa]	SKC.. Δp_{max} [kPa]	DN	k_{vs} [m³/h]	Stock No.	Product No.
300	300	300		15	2.5	BPZ:VXF31.15-2.5	**VXF31.15-2.5**
300	300	300		15	4	BPZ:VXF31.15-4	**VXF31.15-4**
300	300	300		25	5	BPZ:VXF31.24	**VXF31.24**
300	300	300		25	6.3	BPZ:VXF31.25-6.3	**VXF31.25-6.3**
300	300	300		25	7.5	BPZ:VXF31.25	**VXF31.25**
300	300	300		25	10	BPZ:VXF31.25-10	**VXF31.25-10**
300	300	300		40	12	BPZ:VXF31.39	**VXF31.39**
300	300	300		40	16	BPZ:VXF31.40-16	**VXF31.40-16**
300	300	300		40	19	BPZ:VXF31.40	**VXF31.40**
300	300	300		40	25	BPZ:VXF31.40-25	**VXF31.40-25**
300	300	300		50	31	BPZ:VXF31.50	**VXF31.50**
300	300	300		50	40	BPZ:VXF31.50-40	**VXF31.50-40**
175	275	300		65	49	BPZ:VXF31.65	**VXF31.65**
175	275	300		65	63	BPZ:VXF31.65-63	**VXF31.65-63**
100	175	300		80	78	BPZ:VXF31.80	**VXF31.80**
100	175	300		80	100	BPZ:VXF31.80-100	**VXF31.80-100**
			200	100	124	BPZ:VXF31.90	**VXF31.90**
			200	100	160	BPZ:VXF31.100-160	**VXF31.100-160**
			150	125	200	BPZ:VXF31.91	**VXF31.91**
			150	125	250	BPZ:VXF31.125-250	**VXF31.125-250**
			100	150	300	BPZ:VXF31.92	**VXF31.92**
			100	150	315	BPZ:VXF31.150-315	**VXF31.150-315**

Δp_{max}-ratings are valid for mixing applications.

Range overview 3-port valves C/VXF31..

SAX.. Δp_{max} [kPa]	SKD.. Δp_{max} [kPa]	SKB.. Δp_{max} [kPa]	SKC.. Δp_{max} [kPa]	DN	k_{vs} [m³/h]	Stock No.	Product No.
300	300	300		25	5	BPZ:C/VXF31.24	**C/VXF31.24**
300	300	300		25	6.3	BPZ:C/VXF31.25-6.3	**C/VXF31.25-6.3**
300	300	300		25	7.5	BPZ:C/VXF31.25	**C/VXF31.25**
300	300	300		25	10	BPZ:C/VXF31.25-10	**C/VXF31.25-10**
300	300	300		40	12	BPZ:C/VXF31.39	**C/VXF31.39**
300	300	300		40	16	BPZ:C/VXF31.40-16	**C/VXF31.40-16**
300	300	300		40	19	BPZ:C/VXF31.40	**C/VXF31.40**
300	300	300		40	25	BPZ:C/VXF31.40-25	**C/VXF31.40-25**
300	300	300		50	31	BPZ:C/VXF31.50	**C/VXF31.50**
300	300	300		50	40	BPZ:C/VXF31.50-40	**C/VXF31.50-40**
175	275	300		65	49	BPZ:C/VXF31.65	**C/VXF31.65**
175	275	300		65	63	BPZ:C/VXF31.65-63	**C/VXF31.65-63**
100	175	300		80	78	BPZ:C/VXF31.80	**C/VXF31.80**
100	175	300		80	100	BPZ:C/VXF31.80-100	**C/VXF31.80-100**
			200	100	124	BPZ:C/VXF31.90	**C/VXF31.90**
			200	100	160	BPZ:C/VXF31.100-160	**C/VXF31.100-160**
			150	125	200	BPZ:C/VXF31.91	**C/VXF31.91**
			150	125	250	BPZ:C/VXF31.125-250	**C/VXF31.125-250**
			100	150	300	BPZ:C/VXF31.92	**C/VXF31.92**
			100	150	315	BPZ:C/VXF31.150-315	**C/VXF31.150-315**

Replacement sealing glands for VXF31..

VVF/VXF31.., DN15...DN80: part no. 4 284 8806 0
VVF/VXF31.., DN100...DN150: part no. 4 679 5629 0

Field of application for VXF31..

Medium	Temperature	Operating pressure	Sealing gland
Chilled water Brine Water with anti-freeze Low-temperature hot water	-10...150 °C	10 bar ISO 7005	EPDM O-ring, silicone-free grease

For media < 0° C, stem heating element ASZ6.5 or ASZ6.6 is required.

Globe and pressure independent combi valves
3-port flanged valves, PN10: VXF31..

Combinable actuator to VXF31..

Operating voltage	Positioning signal	Positioning time [s]	Spring return function	Data sheet	Stock No.	Product No.
AC 230 V	3-position	120	no	N4501	S55150-A105	**SAX31.00**
AC 230 V	3-position	30	no	N4501	S55150-A106	**SAX31.03**
AC 24 V DC 24 V	DC 0...10 V DC 4...20 mA 0...1000 Ohm	30	no	N4501	S55150-A100	**SAX61.03**
AC 230 V	3-position	120	No	N4561	BPZ:SKD32.50	**SKD32.50**
AC 230 V	3-position	120	Yes (8 s)	N4561	BPZ:SKD32.51	**SKD32.51**
AC 230 V	3-position	Open 30 Close 10	Yes (8 s)	N4561	BPZ:SKD32.21	**SKD32.21**
AC 24 V	DC 0...10 V DC 4...20 mA 0...1000 Ohm	Open 30 Close 15	No	N4561	BPZ:SKD60	**SKD60**
AC 24 V	DC 0...10 V DC 4...20 mA 0...1000 Ohm	Open 30 Close 15	Yes (15 s)	N4561	BPZ:SKD62	**SKD62**
AC 230 V	3-position	120	No	N4564	BPZ:SKB32.50	**SKB32.50**
AC 230 V	3-position	120	Yes (10 s)	N4564	BPZ:SKB32.51	**SKB32.51**
AC 24 V	DC 0...10 V 4...20 mA 0...1000 Ohm	Open 120 Close 10	No	N4564	BPZ:SKB60	**SKB60**
AC 24 V	DC 0...10 V 4...20 mA 0...1000 Ohm	Open 120 Close 10	Yes (10 s)	N4564	BPZ:SKB62	**SKB62**
AC 230 V	3-position	120	No	N4566	BPZ:SKC32.60	**SKC32.60**
AC 230 V	3-position	120	Yes (18 s)	N4566	BPZ:SKC32.61	**SKC32.61**
AC 24 V	DC 0...10 V 4...20 mA 0...1000 Ohm	Open 120 Close 20	No	N4566	BPZ:SKC60	**SKC60**
AC 24 V	DC 0...10 V 4...20 mA 0...1000 Ohm	Open 120 Close 20	Yes (20 s)	N4566	BPZ:SKC62	**SKC62**

3-port seat valves PN16 with flanged connections

VXF40..

- With flanged connections to ISO 7005
- For chilled, low and high temperature water and brine in closed circuits

Data sheet	N4430
Stroke	From DN 100: 40 mm To DN 80: 20 mm
Leakage rate	0...0.02 % of k_{vs} value
Leakage rate bypass	0.5...2 % of k_{vs} value
Medium temperature	-10...150 °C
Valve characteristic	Throughport: equal-percentage Bypass: linear
Rangeability	DN 15...40: >50 DN 50...150: >100
Permissible operating pressure	1600 kPa
Material, valve body	Cast iron EN-GJL-250/EN-GJL-HB 215
Material, inside set	< DN 40: CrNi steel/brass > DN 50: CrNi steel/Rg5
PN class	PN 16

Range overview 3-port valves VXF40..

SAX.. Δp_{max} [kPa]	SKD.. Δp_{max} [kPa]	SKB.. Δp_{max} [kPa]	SKC.. Δp_{max} [kPa]	DN	k_{vs} [m³/h]	Stock No.	Product No.
300	300	300		15	1.9	BPZ:VXF40.15-1.9	**VXF40.15-1.9**
300	300	300		15	2.5	BPZ:VXF40.15-2.5	**VXF40.15-2.5**
300	300	300		15	3	BPZ:VXF40.15-3	**VXF40.15-3**
300	300	300		15	4	BPZ:VXF40.15-4	**VXF40.15-4**
300	300	300		25	5	BPZ:VXF40.25-5	**VXF40.25-5**
300	300	300		25	6.3	BPZ:VXF40.25-6.3	**VXF40.25-6.3**
300	300	300		25	7.5	BPZ:VXF40.25-7.5	**VXF40.25-7.5**
300	300	300		25	10	BPZ:VXF40.25-10	**VXF40.25-10**
300	300	300		40	12	BPZ:VXF40.40-12	**VXF40.40-12**
300	300	300		40	16	BPZ:VXF40.40-16	**VXF40.40-16**
300	300	300		40	19	BPZ:VXF40.40-19	**VXF40.40-19**
300	300	300		40	25	BPZ:VXF40.40-25	**VXF40.40-25**
300	300	300		50	31	BPZ:VXF40.50-31	**VXF40.50-31**
300	300	300		50	40	BPZ:VXF40.50-40	**VXF40.50-40**
175	275	300		65	49	BPZ:VXF40.65-49	**VXF40.65-49**
175	275	300		65	63	BPZ:VXF40.65-63	**VXF40.65-63**
100	175	300		80	78	BPZ:VXF40.80-78	**VXF40.80-78**
100	175	300		80	100	BPZ:VXF40.80-100	**VXF40.80-100**

Δp_{max}-ratings are valid for mixing applications.

Range overview 3-port valves VXF40..

SAX.. Δp_{max} [kPa]	SKD.. Δp_{max} [kPa]	SKB.. Δp_{max} [kPa]	SKC.. Δp_{max} [kPa]	DN	k_{vs} [m³/h]	Stock No.	Product No.
			200	100	124	BPZ:VXF40.100-124	**VXF40.100-124**
			200	100	160	BPZ:VXF40.100-160	**VXF40.100-160**
			150	125	200	BPZ:VXF40.125-200	**VXF40.125-200**
			150	125	250	BPZ:VXF40.125-250	**VXF40.125-250**
			100	150	300	BPZ:VXF40.150-300	**VXF40.150-300**
			100	150	315	BPZ:VXF40.150-315	**VXF40.150-315**

Δp_{max}-ratings are valid for mixing applications.

Range overview 3-port valves C/VXF40..

SAX.. Δp_{max} [kPa]	SKD.. Δp_{max} [kPa]	SKB.. Δp_{max} [kPa]	SKC.. Δp_{max} [kPa]	DN	k_{vs} [m³/h]	Stock No.	Product No.
300	300	300		25	5	BPZ:C/VXF40.25-5	**C/VXF40.25-5**
300	300	300		25	6.3	BPZ:C/VXF40.25-6.3	**C/VXF40.25-6.3**
300	300	300		25	7.5	BPZ:C/VXF40.25-7.5	**C/VXF40.25-7.5**
300	300	300		25	10	BPZ:C/VXF40.25-10	**C/VXF40.25-10**
300	300	300		40	12	BPZ:C/VXF40.40-12	**C/VXF40.40-12**
300	300	300		40	16	BPZ:C/VXF40.40-16	**C/VXF40.40-16**
300	300	300		40	19	BPZ:C/VXF40.40-19	**C/VXF40.40-19**
300	300	300		40	25	BPZ:C/VXF40.40-25	**C/VXF40.40-25**
300	300	300		50	31	BPZ:C/VXF40.50-31	**C/VXF40.50-31**
300	300	300		50	40	BPZ:C/VXF40.50-40	**C/VXF40.50-40**
175	275	300		65	49	BPZ:C/VXF40.65-49	**C/VXF40.65-49**
175	275	300		65	63	BPZ:C/VXF40.65-63	**C/VXF40.65-63**
100	175	300		80	78	BPZ:C/VXF40.80-78	**C/VXF40.80-78**
100	175	300		80	100	BPZ:C/VXF40.80-100	**C/VXF40.80-100**
			200	100	124	BPZ:C/VXF40.100-124	**C/VXF40.100-124**
			200	100	160	BPZ:C/VXF40.100-160	**C/VXF40.100-160**
			150	125	200	BPZ:C/VXF40.125-200	**C/VXF40.125-200**
			150	125	250	BPZ:C/VXF40.125-250	**C/VXF40.125-250**
			100	150	300	BPZ:C/VXF40.150-300	**C/VXF40.150-300**
			100	150	315	BPZ:C/VXF40.150-315	**C/VXF40.150-315**

Δp_{max}-ratings in kPa are valid for mixing applications.

Replacement sealing glands for VXF40..

VVF/VXF40.., DN15...DN80: part no. 4 284 8806 0
VVF/VXF40.., DN100...DN150: part no. 4 679 5629 0

Field of application for VXF40..

Medium	Temperature	Operating pressure	Sealing gland
Chilled water Brine Water with anti-freeze Low-temperature hot water	-10...150 °C	16 bar ISO 7005	EPDM O-ring, silicone-free grease

For media < 0°C, stem heating element ASZ6.5 or ASZ6.6 is required.

Combinable actuator for VXF40..

Operating voltage	Positioning signal	Positioning time [s]	Spring return function	Data sheet	Stock No.	Product No.
AC 230 V	3-position	120	no	N4501	S55150-A105	**SAX31.00**
AC 230 V	3-position	30	no	N4501	S55150-A106	**SAX31.03**
AC 24 V DC 24 V	DC 0...10 V DC 4...20 mA 0...1000 Ohm	30	no	N4501	S55150-A100	**SAX61.03**
AC 230 V	3-position	120	No	N4561	BPZ:SKD32.50	**SKD32.50**
AC 230 V	3-position	120	Yes (8 s)	N4561	BPZ:SKD32.51	**SKD32.51**
AC 230 V	3-position	Open 30 Close 10	Yes (8 s)	N4561	BPZ:SKD32.21	**SKD32.21**
AC 24 V	DC 0...10 V DC 4...20 mA 0...1000 Ohm	Open 30 Close 15	No	N4561	BPZ:SKD60	**SKD60**
AC 24 V	DC 0...10 V DC 4...20 mA 0...1000 Ohm	Open 30 Close 15	Yes (15 s)	N4561	BPZ:SKD62	**SKD62**
AC 230 V	3-position	120	No	N4564	BPZ:SKB32.50	**SKB32.50**
AC 230 V	3-position	120	Yes (10 s)	N4564	BPZ:SKB32.51	**SKB32.51**
AC 24 V	DC 0...10 V 4...20 mA 0...1000 Ohm	Open 120 Close 10	No	N4564	BPZ:SKB60	**SKB60**
AC 24 V	DC 0...10 V 4...20 mA 0...1000 Ohm	Open 120 Close 10	Yes (10 s)	N4564	BPZ:SKB62	**SKB62**
AC 230 V	3-position	120	No	N4566	BPZ:SKC32.60	**SKC32.60**
AC 230 V	3-position	120	Yes (18 s)	N4566	BPZ:SKC32.61	**SKC32.61**
AC 24 V	DC 0...10 V 4...20 mA 0...1000 Ohm	Open 120 Close 20	No	N4566	BPZ:SKC60	**SKC60**
AC 24 V	DC 0...10 V 4...20 mA 0...1000 Ohm	Open 120 Close 20	Yes (20 s)	N4566	BPZ:SKC62	**SKC62**

Globe and pressure independent combi valves
3-port flanged valves, PN16: VXF43..

VXF43..

3-port seat valves PN16 with flanged connections

- With flanged connections to ISO 7005
- For cooling, chilled, low and high temperature water, brine, heat transfer oils in open and closed circuits

Data sheet	N4404
Stroke	40 mm
Leakage rate	0...0.01 % of k_{vs} value
Leakage rate bypass	0.5...2 % of k_{vs} value
Medium temperature	-20...220 °C
Valve characteristic	Through-port: equal percentage Through-port: k_{vs} 250/400 linear Bypass: linear
Rangeability	>100
Permissible operating pressure	1600 kPa
Material, valve body	Nodular cast iron EN-GJS-400-18-LT
Material, inside set	Stainless steel
PN class	PN 16

Range overview 3-port valves VXF43..

SKC.. Δp_{max} [kPa]	DN	k_{vs} [m³/h]	Stock No.	Product No.
650	65	63	S55206-V115	**VXF43.65-63**
400	80	100	S55206-V116	**VXF43.80-100**
250	100	160	S55206-V117	**VXF43.100-160**
160	125	250	S55206-V118	**VXF43.125-250**
100	150	400	S55206-V119	**VXF43.150-400**

Δp_{max}- ratings are valid for mixing applications.

Field of application for VXF43..

Medium	Temperature	Operating pressure	Sealing gland
Chilled water Cooling water Brine Water with anti-freeze Low-temperature hot water	-20...150 °C	16 bar ISO 7005	FEPM O-ring, silicone-free grease
High-temperature hot water	≤ 180 °C	16 bar ISO 7005	FEPM O-ring, silicone-free grease
Heat transfer oil	≤ 220 °C	16 bar	FEPM O-ring, silicone-free grease

For media < 0 °C, stem heating element ASZ6.5 or ASZ6.6 is required.
Media < -5 °C requires sealing gland 428488060.

Accessories for VXF43..

Product Title	Material	Data sheet	Stock No.	Product No.
Bypass extension, flanged connections, DN65	Steel	N4404	S55845-Z114	ALF41B65
Bypass extension, flanged connections, DN80	Steel	N4404	S55845-Z115	ALF41B80
Bypass extension, flanged connections, DN100	Steel	N4404	S55845-Z116	ALF41B100
Bypass extension, flanged connections, DN125	Steel	N4404	S55845-Z117	ALF41B125
Bypass extension, flanged connections, DN150	Steel	N4404	S55845-Z118	ALF41B150

Bypass extension when replacing VXF41.. with VXF43.. or VXF53... Each set contains one extension, 4/8 treaded bolts including nuts and one flat gasket.

Sealing gland for media temperatures < -5 °C

Product Title	Data sheet	Stock No.	Product No.
Sealing gland complete, stem diameter 10 mm, sealing material EPDM		BPZ:428488060	**428488060**

Combinable actuator for VXF43..

Operating voltage	Positioning signal	Positioning time [s]	Spring return function	Data sheet	Stock No.	Product No.
AC 230 V	3-position	120	No	N4566	BPZ:SKC32.60	**SKC32.60**
AC 230 V	3-position	120	Yes (18 s)	N4566	BPZ:SKC32.61	**SKC32.61**
AC 24 V	DC 0...10 V 4...20 mA 0...1000 Ohm	Open 120 Close 20	No	N4566	BPZ:SKC60	**SKC60**
AC 24 V	DC 0...10 V 4...20 mA 0...1000 Ohm	Open 120 Close 20	Yes (20 s)	N4566	BPZ:SKC62	**SKC62**
AC 24 V	DC 0...10 V 4...20 mA 0...1000 Ohm	Open 120 Close 20	Yes (20 s)	N4566	BPZ:SKC62UA	**SKC62UA**

NEW PRODUCT

Globe and pressure independent combi valves
3-port threaded valves, PN16: VXF47..

VXF47..

3-port seat valves PN16, flanged connections VXF47..

For use in heating, ventilating and air conditioning systems as a control valve for closed circuits

Data sheet	N4419
Leakage rate	0...0.1% of Kvs value
Medium temperature	1...95 °C
Rangeability	DN 50...150: > 50
Material, valve body	Grey cast iron EN-GJL-250
Material, inside set	Stainless Steel/R65
PN class	PN 16

Range overview 3-port valves VXF47..

SBX.. Δp_{max} [kPa]	SBV.. Δp_{max} [kPa]	Stroke [mm]	DN	k_{vs} [m³/h]	Stock No.	Product No.
300		20	50	40	S55220-V100	VXF47.50
175	300	20	65	63	S55220-V101	VXF47.65
100	250	20	80	100	S55220-V102	VXF47.80
	200	40	100	160	S55220-V103	VXF47.100
	100	40	125	250	S55220-V104	VXF47.125
	75	40	150	315	S55220-V105	VXF47.150

Field of application for VXF47..

Medium	Temperature	Operating pressure	Sealing gland
Chilled water Brine Water with anti-freeze Low-temperature hot water	1...95 °C	16 bar ISO 7005	EPDM O-ring, silicone-free grease

Combinable actuator for VXF47..

Operating voltage	Positioning signal	Positioning time [s]	Spring return function	Data sheet	Stock No.	Product No.
AC 230 V	3-position	120		N4519	S55160-A102	SBX31
AC 24 V	DC 0...10 V	120		N4519	S55160-A100	SBX61
AC 24 V	3-position	120		N4519	S55160-A101	SBX81
AC 230 V	3-position	180		N4519	S55160-A105	SBV31
AC 24 V	DC 0...10 V	180		N4519	S55160-A103	SBV61
AC 24 V	3-position	180		N4519	S55160-A104	SBV81

3-port seat valves PN25 with flanged connections

VXF53..

- With flanged connections to ISO 7005
- For cooling, chilled, low and high temperature water, brine, heat transfer oils in open and closed circuits

Data sheet	N4405
Stroke	To DN 50: 20 mm From DN 65: 40 mm
Leakage rate	0...0.01 % of k_{vs} value
Leakage rate bypass	0.5...2 % of k_{vs} value;SAX...: 0.05 % of k_{vs} value
Medium temperature	-20...220 °C
Valve characteristic	Through-port: equal percentage Through-port: k_{vs} 250/400 linear Bypass: linear
Rangeability	>100
Permissible operating pressure	2500 kPa
Material, valve body	Nodular cast iron EN-GJS-400-18-LT
Material, inside set	Stainless steel
PN class	PN 16 / PN 25

Range overview 3-port valves VXF53..

SAX.. Δp_{max} [kPa]	SKD.. Δp_{max} [kPa]	SKB.. Δp_{max} [kPa]	SKC.. Δp_{max} [kPa]	DN	k_{vs} [m³/h]	Stock No.	Product No.
1200	1200	1200		15	1.6	S55208-V140	**VXF53.15-1.6**
1200	1200	1200		15	2.5	S55208-V141	**VXF53.15-2.5**
1200	1200	1200		15	4	S55208-V142	**VXF53.15-4**
1200	1200	1200		20	6.3	S55208-V144	**VXF53.20-6.3**
1200	1200	1200		25	6.3	S55208-V145	**VXF53.25-6.3**
1200	1200	1200		25	10	S55208-V146	**VXF53.25-10**
750	1100	1200		32	16	S55208-V148	**VXF53.32-16**
500	650	1200		40	16	S55208-V149	**VXF53.40-16**
500	650	1200		40	25	S55208-V150	**VXF53.40-25**
300	400	1150		50	40	S55208-V152	**VXF53.50-40**
			650	65	63	S55208-V153	**VXF53.65-63**
			400	80	100	S55208-V154	**VXF53.80-100**
			250	100	160	S55208-V155	**VXF53.100-160**
			160	125	250	S55208-V156	**VXF53.125-250**
			100	150	400	S55208-V157	**VXF53.150-400**

Δp_{max}- ratings are valid for mixing applications.

Field of application for VXF53..

Medium	Temperature	Operating pressure	Sealing gland
Chilled water Cooling water Brine Water with anti-freeze Low-temperature hot water	-20...150 °C	25 bar ISO 7005	FEPM O-ring, silicone-free grease
High-temperature hot water	≤ 220 °C	25 bar ISO 7005	FEPM O-ring, silicone-free grease
Heat transfer oil	≤ 220 °C	25 bar	FEPM O-ring, silicone-free grease

For media < 0 °C, stem heating element ASZ6.5 or ASZ6.6 is required.
Media < -5 °C requires sealing gland 428488060.

Accessories for VXF53..

Product Title	Material	Data sheet	Stock No.	Product No.
Bypass extension, flanged connections, DN15	Steel	N4404	S55845-Z110	**ALF41B15**
Bypass extension, flanged connections, DN25	Steel	N4404	S55845-Z111	**ALF41B25**
Bypass extension, flanged connections, DN40	Steel	N4404	S55845-Z112	**ALF41B40**
Bypass extension, flanged connections, DN50	Steel	N4404	S55845-Z113	**ALF41B50**

Bypass extension when replacing VXF41.., DN15...50, with VXF43.. or VXF53... Each set contains one extension, 4/8 treaded bolts including nuts and one flat gasket.

Sealing gland for media temperatures < -5 °C

Product Title	Data sheet	Stock No.	Product No.
Sealing gland complete, stem diameter 10 mm, sealing material EPDM		BPZ:428488060	**428488060**

Combinable actuator to VXF53..

Operating voltage	Positioning signal	Positioning time [s]	Spring return function	Data sheet	Stock No.	Product No.
AC 230 V	3-position	120	no	N4501	S55150-A105	**SAX31.00**
AC 230 V	3-position	30	no	N4501	S55150-A106	**SAX31.03**
AC 24 V DC 24 V	DC 0...10 V DC 4...20 mA 0...1000 Ohm	30	no	N4501	S55150-A100	**SAX61.03**
AC 230 V	3-position	120	No	N4561	BPZ:SKD32.50	**SKD32.50**
AC 230 V	3-position	120	Yes (8 s)	N4561	BPZ:SKD32.51	**SKD32.51**
AC 230 V	3-position	Open 30 Close 10	Yes (8 s)	N4561	BPZ:SKD32.21	**SKD32.21**
AC 24 V	DC 0...10 V DC 4...20 mA 0...1000 Ohm	Open 30 Close 15	No	N4561	BPZ:SKD60	**SKD60**
AC 24 V	DC 0...10 V DC 4...20 mA 0...1000 Ohm	Open 30 Close 15	Yes (15 s)	N4561	BPZ:SKD62	**SKD62**
AC 230 V	3-position	120	No	N4564	BPZ:SKB32.50	**SKB32.50**
AC 230 V	3-position	120	Yes (10 s)	N4564	BPZ:SKB32.51	**SKB32.51**
AC 24 V	DC 0...10 V 4...20 mA 0...1000 Ohm	Open 120 Close 10	No	N4564	BPZ:SKB60	**SKB60**
AC 24 V	DC 0...10 V 4...20 mA 0...1000 Ohm	Open 120 Close 10	Yes (10 s)	N4564	BPZ:SKB62	**SKB62**
AC 230 V	3-position	120	No	N4566	BPZ:SKC32.60	**SKC32.60**
AC 230 V	3-position	120	Yes (18 s)	N4566	BPZ:SKC32.61	**SKC32.61**
AC 24 V	DC 0...10 V 4...20 mA 0...1000 Ohm	Open 120 Close 20	No	N4566	BPZ:SKC60	**SKC60**
AC 24 V	DC 0...10 V 4...20 mA 0...1000 Ohm	Open 120 Close 20	Yes (20 s)	N4566	BPZ:SKC62	**SKC62**
AC 24 V	DC 0...10 V 4...20 mA 0...1000 Ohm	Open 120 Close 20	Yes (20 s)	N4566	BPZ:SKC62UA	**SKC62UA**

Globe and pressure independent combi valves
3-port flanged valves, PN40: VXF61..

VXF61..

3-port seat valves PN40 with flanged connections

- With flanged connections to ISO 7005
- For cooling, chilled, low and high temperature water, brine and heat transfer oils in open and closed circuits

Data sheet	N4482
Stroke	To DN 50: 20 mm From DN 65: 40 mm
Leakage rate	0...0.02 % of k_{vs} value
Leakage rate bypass	0.5...2 % of k_{vs} value
Medium temperature	-25...220 °C (350 °C)
Valve characteristic	Throughport: equal-percentage Bypass: linear
Rangeability	DN 15...40: >50 DN 50...150: >100
Permissible operating pressure	4000 kPa
Material, valve body	Cast steel GP240GH
Material, inside set	CrNi steel
PN class	PN 40

Range overview 3-port valves VXF61..

SKD.. Δp_{max} [kPa]	SKB.. Δp_{max} [kPa]	SKC.. Δp_{max} [kPa]	DN	k_{vs} [m³/h]	Stock No.	Product No.
1200	1600		15	1.9	BPZ:VXF61.14	**VXF61.14**
1200	1600		15	3	BPZ:VXF61.15	**VXF61.15**
1200	1600		25	5	BPZ:VXF61.24	**VXF61.24**
1200	1600		25	7.5	BPZ:VXF61.25	**VXF61.25**
	1200		40	12	BPZ:VXF61.39	**VXF61.39**
	1200		40	19	BPZ:VXF61.40	**VXF61.40**
	1000		50	19	BPZ:VXF61.49	**VXF61.49**
	1000		50	31	BPZ:VXF61.50	**VXF61.50**
		800	65	49	BPZ:VXF61.65	**VXF61.65**
		500	80	78	BPZ:VXF61.80	**VXF61.80**
		300	100	124	BPZ:VXF61.90	**VXF61.90**
		200	125	200	BPZ:VXF61.91	**VXF61.91**
		125	150	300	BPZ:VXF61.92	**VXF61.92**

Δp_{max}-ratings are valid for mixing applications.

Replacement sealing glands for VXF61..

VVF/VXF.., DN15...DN25: part no. 4 284 8829 0
VVF/VXF.., DN40...DN150: part no. 4 679 5630 0
VVF/VXF61..2, DN15...DN150: part no. 4 284 8829 0
VVF/VXF61..5, DN15...25: part no. 4 284 9538 0
VVF/VXF61..5, DN40...DN150: part no. 4 284 9540 0

Field of application for VXF61..

Medium	Temperature	Operating pressure	Sealing gland	Suffix
Chilled water Cooling water Brine Water with anti-freeze Low-temperature hot water	-25...220 °C	40 bar ISO 7005	PTFE sleeve	--
High-temperature hot water	≤ 220 °C	40 bar ISO 7005	PTFE sleeve	--
Heat transfer oil	≤ 220 °C	40 bar ISO 7005	PTFE sleeve	--
Heat transfer oil	220...350 °C	40 bar ISO 7005	PTFE sleeve	2 1)

For media < 0 °C, stem heating element ASZ6.5 is required.
1) Special versions with extended neck are available for applications with heat transfer oil up to 350 °C (only for types VVF61.13 to VVF61.92 and VXF61.14 to VXF61.92).
When ordering, please give Product No. with type suffix, e.g. VVF61.252

Combinable actuator for VXF61..

Operating voltage	Positioning signal	Positioning time [s]	Spring return function	Data sheet	Stock No.	Product No.
AC 230 V	3-position	120	No	N4561	BPZ:SKD32.50	**SKD32.50**
AC 230 V	3-position	120	Yes (8 s)	N4561	BPZ:SKD32.51	**SKD32.51**
AC 230 V	3-position	Open 30 Close 10	Yes (8 s)	N4561	BPZ:SKD32.21	**SKD32.21**
AC 24 V	DC 0...10 V DC 4...20 mA 0...1000 Ohm	Open 30 Close 15	No	N4561	BPZ:SKD60	**SKD60**
AC 24 V	DC 0...10 V DC 4...20 mA 0...1000 Ohm	Open 30 Close 15	Yes (15 s)	N4561	BPZ:SKD62	**SKD62**
AC 230 V	3-position	120	No	N4564	BPZ:SKB32.50	**SKB32.50**
AC 230 V	3-position	120	Yes (10 s)	N4564	BPZ:SKB32.51	**SKB32.51**
AC 230 V	3-position	120	No	N4564	BPZ:SKB32.50	**SKB32.50**
AC 230 V	3-position	120	Yes (10 s)	N4564	BPZ:SKB32.51	**SKB32.51**
AC 24 V	DC 0...10 V 4...20 mA 0...1000 Ohm	Open 120 Close 10	No	N4564	BPZ:SKB60	**SKB60**
AC 24 V	DC 0...10 V 4...20 mA 0...1000 Ohm	Open 120 Close 10	Yes (10 s)	N4564	BPZ:SKB62	**SKB62**
AC 230 V	3-position	120	No	N4566	BPZ:SKC32.60	**SKC32.60**
AC 230 V	3-position	120	Yes (18 s)	N4566	BPZ:SKC32.61	**SKC32.61**
AC 24 V	DC 0...10 V 4...20 mA 0...1000 Ohm	Open 120 Close 20	No	N4566	BPZ:SKC60	**SKC60**
AC 24 V	DC 0...10 V 4...20 mA 0...1000 Ohm	Open 120 Close 20	Yes (20 s)	N4566	BPZ:SKC62	**SKC62**

Globe and pressure independent combi valves
3-port flanged valves with magnetic actuators, PN16: MXF461..

MXF461..

Modulating control valves with magnetic actuator, PN16, flanged

Mixing and 2-port valves PN 16 with magnetic actuator for modulating control of chilled or low-temperature hot water systems in closed circuits. With positioning control, position feedback signal, spring return function and manual control.

Data sheet	N4455
Operating voltage	AC 24 V
Positioning signal	DC 0...10 V DC 2...10 V DC 4...20 mA
Positioning time	<2 s
Spring return function	A->AB closed
Position feedback	DC 0...10 V
Degree of protection	IP54
Ambient temperature, operation	-5...45 °C
Mounting position	Upright to horizontal
Permissible operating pressure	1000 kPa
PN class	PN 16
Leakage rate	< 0.02 % of k_{vs} value
Leakage rate bypass	< 0.2 % of k_{vs} value
Medium temperature	1...130 °C
Valve characteristic	Equal-percentage Linear
Stroke resolution $\Delta H/H_{100}$	1:1000
Material, valve body	Cast iron EN-GJL-250
Material, inside set	CrNi steel/brass

When used as a 2 port valve, inlet B (2) must be closed off with the Z155/.. blanking flange.
MXF461..P valves for media containing mineral oils (data sheet N4455)
MXF461.. valves are UL listed

CAUTION!
Use valve only as a mixing or 2-port valve, not as a diverting valve.

7

Range overview flanged valves MXF461..

DN	k_{vs} [m³/h]	Δp_{max} [kPa]	Δp_s [kPa]	Power consumption [VA]	Stock No.	Product No.
15	0.6	300	300	29	BPZ:MXF461.15-0.6	**MXF461.15-0.6**
15	1.5	300	300	29	BPZ:MXF461.15-1.5	**MXF461.15-1.5**
15	3	300	300	29	BPZ:MXF461.15-3.0	**MXF461.15-3.0**
20	5	300	300	29	BPZ:MXF461.20-5.0	**MXF461.20-5.0**
25	8	300	300	29	BPZ:MXF461.25-8.0	**MXF461.25-8.0**
32	12	300	300	29	BPZ:MXF461.32-12	**MXF461.32-12**
40	20	300	300	44	BPZ:MXF461.40-20	**MXF461.40-20**
50	30	300	300	44	BPZ:MXF461.50-30	**MXF461.50-30**
65	50	300	300	46	BPZ:MXF461.65-50	**MXF461.65-50**

Δp_s for use as 2-port valve

Field of application for MXF461..

Medium	Temperature	Operating pressure	Sealing gland	Suffix
Chilled water Water with anti-freeze Low-temperature hot water	≤ 130 °C	16 bar	EPDM O-ring	--
Mineral oil SAE05...SAE50, mineral-oil-based diesel fuels, heat transfer oils	≤ 130 °C	16 bar	Viton-O-ring	P

Accessories for MXF461..

Product Title	Data sheet	Stock No.	Product No.
Signal converter DC 0...20 V Phs to DC 0...10 V	N5143	BPZ:SEZ91.6	**SEZ91.6**
Replacement electronic for MXG461.., MXF461.. and MXG461S.., DN15...32	N4455	BPZ:ASE1	**ASE1**
Replacement electronic for MXG461.., MXF461.., DN40...65	N4455	BPZ:ASE2	**ASE2**

Blanking flanges

Scope of delivery: 1 blanking flange, 1 seal, screws, spring washers and nuts.

DN	Stock No.	Product No.
15	BPZ:Z155/15F	**Z155/15F**
20	BPZ:Z155/20F	**Z155/20F**
25	BPZ:Z155/25F	**Z155/25F**
32	BPZ:Z155/32F	**Z155/32F**
40	BPZ:Z155/40	**Z155/40**
50	BPZ:Z155/50	**Z155/50**
65	BPZ:Z155/65	**Z155/65**

Globe and pressure independent combi valves
3-port flanged valves with magnetic actuators, PN16: M3P..FY

M3P..FY..

Modulating control valves with magnetic actuator, PN16, flanged

Mixing and 2-port valves with magnetic actuator for modulating control of chilled or low-pressure hot water systems with closed circuits. Flanged connections, with positioning control, position feedback signal, spring return function, manual control.

Data sheet	N4454
Operating voltage	AC 24 V
Positioning signal	DC 0...10 V DC 4...20 mA
Positioning time	Close: <2 s
Spring return function	1->3 closed
Position feedback	DC 0...10 V
Degree of protection	IP31
Ambient temperature, operation	2...50 °C
Mounting position	Upright to horizontal
Permissible operating pressure	1000 kPa
PN class	PN 16
Leakage rate	< 0.05 % of k_{vs} value
Leakage rate bypass	ca. 2 % of k_{vs} value
Medium temperature	1...120 °C
Valve characteristic	Linear
Stroke resolution $\Delta H/H_{100}$	1:1000
Material, valve body	EN-GJL-HB215
Material, inside set	CrNi steel/brass

When used as a 2 port valve, inlet B (2) must be closed off with the Z155/.. blanking flange.
M3P..FYP for media containing mineral oils (data sheet N4454)

CAUTION!
Valve may only be used as a mixing or 2-port valve, not as a diverting valve.

7

Range overview flanged valves M3P..FY

DN	k_{vs} [m³/h]	Δp_{max} [kPa]	Δp_s [kPa]	Power consumption [VA]	Stock No.	Product No.
80	80	300	300	80	BPZ:M3P80FY	**M3P80FY**
100	130	200	200	120	BPZ:M3P100FY	**M3P100FY**

Δp_s for use as 2-port valve

Field of application for M3P..FY

Medium	Temperature	Operating pressure	Sealing gland	Suffix
Chilled water Water with anti-freeze Low-temperature hot water	≤ 120 °C	16 bar	EPDM O-ring	--
Mineral oil SAE05...SAE50, mineral-oil-based diesel fuels, heat transfer oils	≤ 120 °C	16 bar	Viton-O-ring	P

Accessories for M3P..FY

Product Title	Data sheet	Stock No.	Product No.
Signal converter DC 0...20 V Phs to DC 0...10 V	N5143	BPZ:SEZ91.6	**SEZ91.6**
Replacement electronic for M3P..FY..	N4454	BPZ:ZM250	**ZM250**

Blanking flanges

Scope of delivery: 1 blanking flange, 1 seal, screws, spring washers and nuts.

DN	Stock No.	Product No.
80	BPZ:Z155/80	**Z155/80**
100	BPZ:Z155/100	**Z155/100**

Globe and pressure independent combi valves
3-port threaded valves, PN16: VXP45..

VXP45..

3-port seat valves, PN16

3-port valves with threaded connections for the control of terminal units, chilled ceilings or heating zones.
Suitable media: Water (to VDI 2035), water with anti-freeze.

Data sheet	N4845
Stroke	5.5 mm
Leakage rate	0...0.02 % of k_{vs} value
Medium temperature	1...110 °C
Valve characteristic	Throughport up to k_{vs} 6.3: equal-percentage Throughport from [kvs/] 10: linear Bypass: linear
Material, valve body	Bronze CC491K (Rg5)
Material, inside set	CrNi steel / Rg5 / brass
PN class	PN 16
Permissible operating pressure	1600 kPa

V..P45.. valves are only used as mixing or 2-port valves, not as diverting valves.

Range overview 3-port valves VXP45..

Connecting thread	SSB.. Δp_{max} [kPa]	SSC.. Δp_{max} [kPa]	DN	k_{vs} [m³/h]	Stock No.	Product No.
G ½ B "	400		10	0.25	BPZ:VXP45.10-0.25	**VXP45.10-0.25**
G ½ B "	400		10	0.4	BPZ:VXP45.10-0.4	**VXP45.10-0.4**
G ½ B "	400		10	0.63	BPZ:VXP45.10-0.63	**VXP45.10-0.63**
G ½ B "	400		10	1	BPZ:VXP45.10-1	**VXP45.10-1**
G ½ B "	400		10	1.6	BPZ:VXP45.10-1.6	**VXP45.10-1.6**
G ¾ B "	350		15	2.5	BPZ:VXP45.15-2.5	**VXP45.15-2.5**
G 1 B "	350		20	4	BPZ:VXP45.20-4	**VXP45.20-4**
G 1¼ B "	300		25	6.3	BPZ:VXP45.25-6.3	**VXP45.25-6.3**
G 1½ B "		300	25	10	BPZ:VXP45.25-10	**VXP45.25-10**
G 2 B "		175	32	16	BPZ:VXP45.32-16	**VXP45.32-16**
G 2¼ B "		75	40	25	BPZ:VXP45.40-25	**VXP45.40-25**

Field of applications for VXP45..

Medium	Temperature	Operating pressure	Sealing gland
Chilled water Water with anti-freeze Low-temperature hot water	1...110 °C	16 bar ISO 7628	EPDM O-ring

Accessories for VXP45..

Product Title	Stock No.	Product No.
Fittings, pipe-side with threaded connection	BPZ:ALG..	**ALG..**

Combinable actuator for VXP45..

Operating voltage	Positioning signal	Positioning time [s]	Spring return function	Data sheet	Stock No.	Product No.
AC 230 V	3-position	150		N4891	BPZ:SSB31	**SSB31**
AC 24 V DC 24 V	DC 0...10 V	75		N4891	BPZ:SSB61	**SSB61**
AC 24 V	3-position	150		N4891	BPZ:SSB81	**SSB81**
AC 230 V	3-position	150	No	N4895	BPZ:SSC31	**SSC31**
AC 24 V DC 24 V	DC 0...10 V	30	No	N4895	BPZ:SSC61	**SSC61**
AC 24 V DC 24 V	DC 0...10 V	30	Yes (15 s)	N4895	BPZ:SSC61.5	**SSC61.5**
AC 24 V	3-position	150	No	N4895	BPZ:SSC81	**SSC81**

Further information to the actuators please see "Actuators for threaded valves with 5.5 mm stroke"

Globe and pressure independent combi valves
3-port threaded valves with bypass, PN16: VMP45..

VMP45..

3-port seat valves with bypass, PN16

3-port seat valves with bypass, with threaded connections for the control of terminal units, chilled ceilings or heating zones.
Suitable media: Water (to VDI 2035), water with anti-freeze.

Data sheet	N4845
Stroke	5.5 mm
Leakage rate	0...0.02 % of k_{vs} value
Medium temperature	1...110 °C
Valve characteristic	Equal-percentage: Bypass: linear
Material, valve body	Red brass CC499K (Rg5)
Material, inside set	CrNi steel, brass
PN class	PN 16
Permissible operating pressure	1600 kPa

V..P45.. valves are only used as mixing valves, not as diverting valves.

Range overview 3-port valves with bypass VMP45..

Connecting thread	SSB.. Δp_{max} [kPa]	DN	k_{vs} [m³/h]	Stock No.	Product No.
G ½ B "	400	10	0.25	BPZ:VMP45.10-0.25	**VMP45.10-0.25**
G ½ B "	400	10	0.4	BPZ:VMP45.10-0.4	**VMP45.10-0.4**
G ½ B "	400	10	0.63	BPZ:VMP45.10-0.63	**VMP45.10-0.63**
G ½ B "	400	10	1	BPZ:VMP45.10-1	**VMP45.10-1**
G ½ B "	400	10	1.6	BPZ:VMP45.10-1.6	**VMP45.10-1.6**
G ¾ B "	400	15	2.5	BPZ:VMP45.15-2.5	**VMP45.15-2.5**
G 1 B "	400	20	4	BPZ:VMP45.20-4	**VMP45.20-4**

Range overview 3-port valves with bypass VMP45..S

Connecting thread	SSB.. Δp_{max} [kPa]	DN	k_{vs} [m³/h]	Stock No.	Product No.
G ½ B "	400	10	0.63	BPZ:VMP45.10-0.63S	**VMP45.10-0.63S**
G ½ B "	400	10	1	BPZ:VMP45.10-1S	**VMP45.10-1S**
G ½ B "	400	10	1.6	BPZ:VMP45.10-1.6S	**VMP45.10-1.6S**
W 1⅛-14 "	400	15	2.5	BPZ:VMP45.15-2.5S	**VMP45.15-2.5S**

Field of applications for VMP45..

Medium	Temperature	Operating pressure	Sealing gland
Chilled water Water with anti-freeze Low-temperature hot water	1...110 °C	16 bar ISO 7628	EPDM O-ring

Accessories for VMP45..

Product Title	Stock No.	Product No.
Fittings, pipe-side with threaded connection	BPZ:ALG..	**ALG..**

Combinable actuator for VMP45..

Operating voltage	Positioning signal	Positioning time [s]	Data sheet	Stock No.	Product No.
AC 230 V	3-position	150	N4891	BPZ:SSB31	**SSB31**
AC 24 V DC 24 V	DC 0...10 V	75	N4891	BPZ:SSB61	**SSB61**
AC 24 V	3-position	150	N4891	BPZ:SSB81	**SSB81**

Globe and pressure independent combi valves
3-port threaded valves, PN16: VXP47..

VXP47..

3-port valves, PN16

3-port valves with threaded connections for the control of terminal units, chilled ceilings or heating zones.
Suitable media: Water (to VDI 2035), water with anti-freeze.

Data sheet	N4847
Stroke	2.5 mm
Leakage rate	0...0.05 % of k_{vs} value
Leakage rate bypass	0...0.05 % of k_{vs} value
Medium temperature	1...110 °C
Valve characteristic	Throughport: linear Bypass: linear
Material, valve body	Red brass CC491K (Rg5)
Material, inside set	CrNi steel, brass
PN class	PN 16
Permissible operating pressure	1600 kPa

Range overview 3-port valves VXP47..

Connecting thread	DN	k_{vs} [m³/h]	Stock No.	Product No.
G ½ B "	10	0.25	BPZ:VXP47.10-0.25	**VXP47.10-0.25**
G ½ B "	10	0.4	BPZ:VXP47.10-0.4	**VXP47.10-0.4**
G ½ B "	10	0.63	BPZ:VXP47.10-0.63	**VXP47.10-0.63**
G ½ B "	10	1	BPZ:VXP47.10-1	**VXP47.10-1**
G ½ B "	10	1.6	BPZ:VXP47.10-1.6	**VXP47.10-1.6**
G ¾ B "	15	2.5	BPZ:VXP47.15-2.5	**VXP47.15-2.5**
G 1 B "	20	4	BPZ:VXP47.20-4	**VXP47.20-4**

70 % k_{vs} in bypass for all types

Overview differential pressures

SFP../SSP.. Δp_{max} [kPa]	STP.. Δp_{max} [kPa]	Product No.
400	400	**VXP47.10-0.25**
400	250	**VXP47.10-0.4**
400	250	**VXP47.10-0.63**
400	250	**VXP47.10-1**
300	150	**VXP47.10-1.6**
300	150	**VXP47.15-2.5**
175	100	**VXP47.20-4**

Combinable actuator to VXP47..

Operating voltage	Positioning signal	Positioning time [s]	Color	Cable length [m]	Data sheet	Stock No.	Product No.
AC 230 V	3-position	150	White/Gray	1.5	N4864	BPZ:SSP31	**SSP31**
AC 230 V	2-position	210	Black	1	N4884	S55174-A103	STP23
AC 230 V	2-position	210	White		N4884	S55174-A112	STP23/00
AC 230 V	2-position	210	Black		N4884	S55174-A120	STP23B/00
AC 230 V	2-position	10	Gray	1.8	N4865	BPZ:SFP21/18	**SFP21/18**
AC 24 V DC 24 V	DC 0...10 V	34	White/Gray	1.5	N4864	BPZ:SSP61	**SSP61**
AC 24 V	3-position	150	White/Gray	1.5	N4864	BPZ:SSP81	**SSP81**
AC 24 V	3-position	43	White/Gray	1.5	N4864	BPZ:SSP81.04	**SSP81.04**
AC 24 V DC 24 V	2-position PDM	270	Black	1	N4884	S55174-A102	STP73
AC 24 V DC 24 V	2-position PDM	270	White		N4884	S55174-A111	STP73/00
AC 24 V DC 24 V	2-position PDM	270	Black		N4884	S55174-A119	STP73B/00
AC 24 V	2-position	10	Gray	1.8	N4865	BPZ:SFP71/18	**SFP71/18**
AC 24 V DC 24 V	2-position PDM/parallel operation	270	White		N4884	S55174-A116	STP73PR/00

NEW PRODUCT

Globe and pressure independent combi valves
3-port threaded valves with bypass, PN16: VMP47..

VMP47..

3-port seat valves with bypass, PN16

3-port valves with bypass and threaded connections for the control of terminal units, chilled ceilings or heating zones.
Suitable media: Water (to VDI 2035), water with anti-freeze.

Data sheet	N4847
Stroke	2.5 mm
Leakage rate	0...0.05 % of k_{vs} value
Leakage rate bypass	0...0.05 % of k_{vs} value
Medium temperature	1...110 °C
Valve characteristic	Throughport: linear Bypass: linear
Material, valve body	Red brass CC491K (Rg5)
Material, inside set	CrNi steel, brass
PN class	PN 16
Permissible operating pressure	1600 kPa

Range overview 3-port with bypass VMP47..

Connecting thread	SFP../SSP.. Δp_{max} [kPa]	STP.. Δp_{max} [kPa]	DN	k_{vs} [m³/h]	Stock No.	Product No.
G ½ B "	400	400	10	0.25	BPZ:VMP47.10-0.25	**VMP47.10-0.25**
G ½ B "	400	400	10	0.4	BPZ:VMP47.10-0.4	**VMP47.10-0.4**
G ½ B "	400	250	10	0.63	BPZ:VMP47.10-0.63	**VMP47.10-0.63**
G ½ B "	400	250	10	1	BPZ:VMP47.10-1	**VMP47.10-1**
G ½ B "	300	150	10	1.6	BPZ:VMP47.10-1.6	**VMP47.10-1.6**
G ¾ B "	300	150	15	2.5	BPZ:VMP47.15-2.5	**VMP47.15-2.5**

70 % k_{vs} in bypass for all types

Range overview 3-port with bypass VMP47..S

Connecting thread	SFP../SSP.. Δp_{max} [kPa]	STP.. Δp_{max} [kPa]	DN	k_{vs} [m³/h]	Stock No.	Product No.
G ½ B "	400	250	10	0.63	BPZ:VMP47.10-0.63S	**VMP47.10-0.63S**
G ½ B "	400	250	10	1	BPZ:VMP47.10-1S	**VMP47.10-1S**
G ½ B "	300	150	10	1.6	BPZ:VMP47.10-1.6S	**VMP47.10-1.6S**
W11/8-14	300	150	15	2.5	BPZ:VMP47.15-2.5S	**VMP47.15-2.5S**

70 % k_{vs} in bypass for all types

Combinable actuator to VMP47..

Operating voltage	Positioning signal	Positioning time [s]	Cable length [m]	Data sheet	Stock No.	Product No.
AC 230 V	3-position	150	1.5	N4864	BPZ:SSP31	**SSP31**
AC 230 V	2-position	210	1	N4884	S55174-A103	STP23
AC 230 V	2-position	210		N4884	S55174-A112	STP23/00
AC 230 V	2-position	210		N4884	S55174-A120	STP23B/00
AC 230 V	2-position	10	1.8	N4865	BPZ:SFP21/18	**SFP21/18**
AC 24 V DC 24 V	DC 0...10 V	34	1.5	N4864	BPZ:SSP61	**SSP61**
AC 24 V	3-position	150	1.5	N4864	BPZ:SSP81	**SSP81**
AC 24 V	3-position	43	1.5	N4864	BPZ:SSP81.04	**SSP81.04**
AC 24 V DC 24 V	2-position PDM	270	1	N4884	S55174-A102	STP73
AC 24 V DC 24 V	2-position PDM	270		N4884	S55174-A111	STP73/00
AC 24 V DC 24 V	2-position PDM	270		N4884	S55174-A119	STP73B/00
AC 24 V	2-position	10	1.8	N4865	BPZ:SFP71/18	**SFP71/18**
AC 24 V DC 24 V	2-position PDM/parallel operation	270		N4884	S55174-A116	STP73PR/00

NEW PRODUCT

Globe and pressure independent combi valves
3-port threaded valves PN16: C/VXI41..

C/VXI41..

3-port seat valves PN16 with internally threaded connections

- With internally threaded connections Rp.. to ISO 7-1
- For chilled water, low pressure hot water in open and closed circuits

Data sheet	N4362
Stroke	20 mm
Leakage rate	0...0.02 % of k_{vs} value
Leakage rate bypass	0.5...2 % of k_{vs} value
Medium temperature	-25...150 °C
Valve characteristic	Throughport: equal-percentage Bypass: linear
Rangeability	DN 15: >50 DN 20...50: >100
Permissible operating pressure	1600 kPa
Material, valve body	Bronze CC491K (Rg5)
Material, inside set	CrNi Steel/ Rg 5 brass
PN class	PN 16

Range overview of 3-port valves C/VXI41..

SAX.. Δp_{max} [kPa]	SKD.. Δp_{max} [kPa]	DN	Connecting thread	k_{vs} [m³/h]	Stock No.	Product No.
400	400	15	Rp ½	2.5	BPZ:C/VXI41.15-2.5	**C/VXI41.15-2.5**
400	400	15	Rp ½	4.0	BPZ:C/VXI41.15-4	**C/VXI41.15-4**
400	400	20	Rp ¾	6.3	BPZ:C/VXI41.20-6.3	**C/VXI41.20-6.3**
400	400	25	Rp 1	10	BPZ:C/VXI41.25-10	**C/VXI41.25-10**
400	400	32	Rp 1¼	16	BPZ:C/VXI41.32-16	**C/VXI41.32-16**
400	400	40	Rp 1½	25	BPZ:C/VXI41.40-25	**C/VXI41.40-25**
300	400	50	Rp 2	40	BPZ:C/VXI41.50-40	**C/VXI41.50-40**

Replacement sealing gland for C/VXI41...

VXG41.., DN15...50: part no. 4 284 8874 0

Field of application for C/VXI41..

Medium	Temperature	Operating pressure	Sealing gland	Suffix
Chilled water Cooling water Brine Water with anti-freeze Low-temperature hot water High-temperature hot water	-25...150 °C	16 bar ISO 7005	EPDM O-ring, silicone-free grease	

For media < 0°C, stem heating element ASZ6.5 or ASZ6.6 is required.

Accessories for C/VXI41..

Product Title	Stock No.	Product No.
Fittings, pipe-side with threaded connection	BPZ:ALG..	**ALG..**

Combinable actuator for C/VXI41..

Operating voltage	Positioning signal	Positioning time [s]	Spring return function	Data sheet	Stock No.	Product No.
AC 230 V	3-position	120	no	N4501	S55150-A105	**SAX31.00**
AC 230 V	3-position	30	no	N4501	S55150-A106	**SAX31.03**
AC 24 V DC 24 V	DC 0...10 V DC 4...20 mA 0...1000 Ohm	30	no	N4501	S55150-A100	**SAX61.03**
AC 230 V	3-position	120	No	N4561	BPZ:SKD32.50	**SKD32.50**
AC 230 V	3-position	120	Yes (8 s)	N4561	BPZ:SKD32.51	**SKD32.51**
AC 230 V	3-position	Open 30 Close 10	Yes (8 s)	N4561	BPZ:SKD32.21	**SKD32.21**
AC 24 V	DC 0...10 V DC 4...20 mA 0...1000 Ohm	Open 30 Close 15	No	N4561	BPZ:SKD60	**SKD60**
AC 24 V	DC 0...10 V DC 4...20 mA 0...1000 Ohm	Open 30 Close 15	Yes (15 s)	N4561	BPZ:SKD62	**SKD62**

Globe and pressure independent combi valves
3-port threaded valves PN16: VXI46..

VXI46..

3-port zone valves, PN16 with on/off characteristic

3-port valves, internally threaded connections, for the control of zones or terminal units. Suitable media: water (to VDE 2035), water with anti-freeze.

Data sheet	N4842
Stroke	2.5 mm
Leakage rate	0...0.05% of k_{vs} value
Leakage rate bypass	2...5% of k_{vs} value
Medium temperature	1...110 °C
Permissible operating pressure	1600 kPa
Material, valve body	Hot-pressed brass
Material, inside set	Stainless steel, brass
Mounting position	Upright to horizontal
PN class	PN 16
Valve characteristic	Non-linear (on/off)

Range overview 3-port internally threaded valves VXI46.. (diverting valves)

Connecting thread	DN	k_{vs} [m³/h]	SFA.. Δp_{max} [kPa]	SUA21.. Δp_{max} [kPa]	STA.. Δp_{max} [kPa]	Stock No.	Product No.
Rp ½ "	15	2	300	300	200	BPZ:VXI46.15	**VXI46.15**
Rp ¾ "	20	3.5	300	300	200	BPZ:VXI46.20	**VXI46.20**
Rp 1 "	25	5	300	300	200	BPZ:VXI46.25	**VXI46.25**
Rp ½ "	15	2	300	300	200	S55249-V103	**VXI46.15/1**
Rp ¾ "	20	3.5	300	300	200	S55249-V104	**VXI46.20/1**
Rp 1 "	25	5	300	300	200	S55249-V105	**VXI46.25/1**
Rp 1 "	25	5	200	200	200	BPZ:VXI46.25T	**VXI46.25T**

To ensure noiseless operation, Δp_{max} should not exceed 100 kPa.
VXI46..: 70 % k_{vs} in bypass, leakage rate in bypass 2...5 % of k_{vs} value. VXI46.25T: 100 % k_{vs} in bypass, leakage rate in bypass 0.05 % of k_{vs} value

Combinable actuator to VXI46..

Operating voltage	Positioning signal	Positioning time [s]	Color	Cable length [m]	Data sheet	Stock No.	Product No.
AC 230 V	2-position	10		1.8	N4863	BPZ:SFA21/18	**SFA21/18**
AC 24 V	2-position	10		1.8	N4863	BPZ:SFA71/18	**SFA71/18**
AC 230 V	3-position SPDT	43		1.5	N4860	BPZ:SSA31.04	**SSA31.04**
AC 230 V	2-position	210	Black	1	N4884	S55174-A101	STA23
AC 230 V	2-position	210	White		N4884	S55174-A110	STA23/00
AC 230 V	2-position	210	Black		N4884	S55174-A118	STA23B/00
AC 230 V	2-position	210	White		N4884	S55174-A114	STA23MP/00
AC 24 V DC 24 V	2-position PDM	270	Black	1	N4884	S55174-A100	STA73
AC 24 V DC 24 V	2-position PDM	270	White		N4884	S55174-A109	STA73/00
AC 24 V DC 24 V	2-position PDM	270	Black		N4884	S55174-A117	STA73B/00
AC 24 V DC 24 V	2-position PDM	270	White		N4884	S55174-A113	STA73MP/00
AC 230 V	2-position (SPST)	10 s @ 50 Hz	Gray	10 s @ 50 Hz	N4830	S55176-A102	**SUA21/1**

For suitable combination of actuator STA.. and connection cable ASY.., see chapter introduction page 7-4.

NEW PRODUCT

Globe and pressure independent combi valves
3-port Threaded valves, PN16: MXI421..

MXI421..

On/off 3-port valve with spring return

Control valve for use with terminal units for heating and cooling zones. The actuators are equipped with a manual lever and spring return facility (valve closed). 1 auxiliary switch is available as an accessory item.

Data sheet	N4867
Stroke	2.5 mm
Leakage rate	< 0.05% of k_{vs} value
Leakage rate bypass	2...5 % of k_{vs} value
Medium temperature	1...110 °C
Operating voltage	AC 230 V
Positioning signal	2-position
Positioning time	10 s
Power consumption	12 VA
Degree of protection	IP30
Ambient temperature range	1...50 °C
Positioning force	200 N
Mounting position	Upright up to 85° inclined
Material, valve body	Brass
Material, inside set	Stainless steel/brass/bronze Rg5

Range overview of MXI421..

DN	Connecting thread	k_{vs} [m³/h]	Δp_{max} [kPa]	Stock No.	Product No.
15	Rp 1/2	2.0	300	BPZ:MXI421.15	**MXI421.15**
20	Rp 3/4	2.0	300	BPZ:MXI421.20	**MXI421.20**
25	Rp 1	2.0	300	BPZ:MXI421.25	**MXI421.25**

Accessories for MXI421..

Product Title	Data sheet	Stock No.	Product No.
Auxiliary switch for SFA21.../ SFA71.../ SFP21.../ SFP71...	N4863	BPZ:ASC2.1/18	**ASC2.1/18**

3-port seat valves PN16 with externally threaded connections

VXG41..

- With threaded connections to ISO 228-1
- For drinking, cooling and chilled water, low and high temperature hot water and brine in open and closed circuits

Data sheet	N4463
Stroke	20 mm
Leakage rate	0...0.02 % of k_{vs} value
Leakage rate bypass	Standard version: 0.5...2 % of k_{vs} value Special version: 0...0.02 % of k_{vs} value (VXG41..01)
Medium temperature	-25...150 °C
Valve characteristic	Throughport: equal-percentage Bypass: linear
Rangeability	DN 15: > 50 DN 20...50: > 100
Permissible operating pressure	1600 kPa
Material, valve body	Bronze CuSn5Zn5Pb2 (CC499K)
Material, inside set	CrNi steel
PN class	PN 16

Range overview 3-port valves VXG41..

SAX.. Δp_{max} [kPa]	SKD.. Δp_{max} [kPa]	SKB.. Δp_{max} [kPa]	Connecting thread	DN	k_{vs} [m³/h]	Stock No.	Product No.
800	800	800	G 1 B "	15	1.6	BPZ:VXG41.1301	**VXG41.1301**
800	800	800	G 1 B "	15	2.5	BPZ:VXG41.1401	**VXG41.1401**
800	800	800	G 1 B "	15	4	BPZ:VXG41.15	**VXG41.15**
800	800	800	G 1 B "	15	4	BPZ:VXG41.1501	**VXG41.1501**
800	800	800	G 1¼ B "	20	6.3	BPZ:VXG41.20	**VXG41.20**
800	800	800	G 1¼ B "	20	6.3	BPZ:VXG41.2001	**VXG41.2001**
800	800	800	G 1½ B "	25	10	BPZ:VXG41.25	**VXG41.25**
800	800	800	G 1½ B "	25	10	BPZ:VXG41.2501	**VXG41.2501**
800	800	800	G 2 B "	32	16	BPZ:VXG41.32	**VXG41.32**
800	800	800	G 2 B "	32	16	BPZ:VXG41.3201	**VXG41.3201**
525	775	800	G 2¼ B "	40	25	BPZ:VXG41.40	**VXG41.40**
525	775	800	G 2¼ B "	40	25	BPZ:VXG41.4001	**VXG41.4001**
300	450	800	G 2¾ B "	50	40	BPZ:VXG41.50	**VXG41.50**
300	450	800	G 2¾ B "	50	40	BPZ:VXG41.5001	**VXG41.5001**

VXG41..01 are DVGW approved
VXG41..01 are supplied with tight bypass
Δp_{max}-ratings are valid for mixing applications.
ALG..3 fittings must be ordered as individual items and will be delivered separately.

Replacement sealing gland for VXG41..

VXG41.., DN15...50: part no. 4 284 8874 0

Globe and pressure independent combi valves
3-port threaded valves, PN16: VXG41..

Field of application for VXG41..

Medium	Temperature	Operating pressure	Sealing gland	Suffix
Chilled water Cooling water Brine Water with anti-freeze Low-temperature hot water High-temperature hot water	-25...150 °C	16 bar ISO 7005	EPDM O-ring, silicone-free grease	--
Drinking water	≤ 90 °C	16 bar ISO 7005	EPDM O-ring, silicone-free grease	01

For media < 0°C, stem heating element ASZ6.5 or ASZ6.6 is required.

Accessories for VXG41..

Product Title	Stock No.	Product No.
Fittings, pipe-side with threaded connection	BPZ:ALG..	**ALG..**

Combinable actuator for VXG41..

Operating voltage	Positioning signal	Positioning time [s]	Spring return function	Data sheet	Stock No.	Product No.
AC 230 V	3-position	120	no	N4501	S55150-A105	**SAX31.00**
AC 230 V	3-position	30	no	N4501	S55150-A106	**SAX31.03**
AC 24 V DC 24 V	DC 0...10 V DC 4...20 mA 0...1000 Ohm	30	no	N4501	S55150-A100	**SAX61.03**
AC 230 V	3-position	120	No	N4561	BPZ:SKD32.50	**SKD32.50**
AC 230 V	3-position	120	Yes (8 s)	N4561	BPZ:SKD32.51	**SKD32.51**
AC 230 V	3-position	Open 30 Close 10	Yes (8 s)	N4561	BPZ:SKD32.21	**SKD32.21**
AC 24 V	DC 0...10 V DC 4...20 mA 0...1000 Ohm	Open 30 Close 15	No	N4561	BPZ:SKD60	**SKD60**
AC 24 V	DC 0...10 V DC 4...20 mA 0...1000 Ohm	Open 30 Close 15	Yes (15 s)	N4561	BPZ:SKD62	**SKD62**
AC 230 V	3-position	120	No	N4564	BPZ:SKB32.50	**SKB32.50**
AC 230 V	3-position	120	Yes (10 s)	N4564	BPZ:SKB32.51	**SKB32.51**
AC 24 V	DC 0...10 V 4...20 mA 0...1000 Ohm	Open 120 Close 10	No	N4564	BPZ:SKB60	**SKB60**
AC 24 V	DC 0...10 V 4...20 mA 0...1000 Ohm	Open 120 Close 10	Yes (10 s)	N4564	BPZ:SKB62	**SKB62**

3-port seat valves PN16 with externally threaded connections

VXG44..

- With threaded connections to ISO 228/1
- For chilled water or low-temperature hot water in closed circuits

Data sheet	N4464
Stroke	5.5 mm
Leakage rate	0...0.02 % of k_{vs} value
Leakage rate bypass	0...0.02 % of k_{vs} value
Medium temperature	1...120 °C
Valve characteristic	Throughport: linear Bypass: linear
Rangeability	From DN 20: >100 DN 15: >50
Permissible operating pressure	1600 kPa
Material, valve body	Bronze CC491K (Rg5)
Material, inside set	CrNi steel/Rg5/brass
PN class	PN 16

Range overview 3-port valves VXG44..

Δp_{max} [kPa]	Connecting thread	DN	k_{vs} [m³/h]	Stock No.	Product No.
400	G 1 B "	15	0.25	BPZ:VXG44.15-0.25	**VXG44.15-0.25**
400	G 1 B "	15	0.4	BPZ:VXG44.15-0.4	**VXG44.15-0.4**
400	G 1 B "	15	0.63	BPZ:VXG44.15-0.63	**VXG44.15-0.63**
400	G 1 B "	15	1	BPZ:VXG44.15-1	**VXG44.15-1**
400	G 1 B "	15	1.6	BPZ:VXG44.15-1.6	**VXG44.15-1.6**
400	G 1 B "	15	2.5	BPZ:VXG44.15-2.5	**VXG44.15-2.5**
400	G 1 B "	15	4	BPZ:VXG44.15-4	**VXG44.15-4**
400	G 1¼ B "	20	6.3	BPZ:VXG44.20-6.3	**VXG44.20-6.3**
400	G 1½ B "	25	10	BPZ:VXG44.25-10	**VXG44.25-10**
250	G 2 B "	32	16	BPZ:VXG44.32-16	**VXG44.32-16**
125	G 2¼ B "	40	25	BPZ:VXG44.40-25	**VXG44.40-25**

Δp_{max}-ratings are valid for mixing applications. The ratings refer to actuators SQS35/65/85 of the D-series with a positioning force of 400N. Fittings ALG..3 must be ordered as separate items and are also supplied as such.

Field of application for VXG44..

Medium	Temperature	Operating pressure	Sealing gland
Chilled water Water with anti-freeze Low-temperature hot water	1...120 °C	16 bar ISO 7005	EPDM O-ring

Accessories for VXG44..

Product Title	Stock No.	Product No.
Fittings, pipe-side with threaded connection	BPZ:ALG..	**ALG..**

Combinable actuator for VXG44..

Operating voltage	Positioning signal	Positioning time [s]	Spring return function	Data sheet	Stock No.	Product No.
AC 230 V	3-position	150	No	N4573	BPZ:SQS35.00	**SQS35.00**
AC 230 V	3-position	35	No	N4573	BPZ:SQS35.03	**SQS35.03**
AC 230 V	3-position	150	Yes (8 s)	N4573	BPZ:SQS35.50	**SQS35.50**
AC 230 V	3-position	35	Yes (8 s)	N4573	BPZ:SQS35.53	**SQS35.53**
AC 24 V	3-position	150	No	N4573	BPZ:SQS85.00	**SQS85.00**
AC 24 V	3-position	35	No	N4573	BPZ:SQS85.03	**SQS85.03**
AC 24 V	DC 0...10 V 0...1000 Ohm	35	No	N4573	BPZ:SQS65	**SQS65**
AC 24 V	DC 2...10 V 0...1000 Ohm	35	No	N4573	BPZ:SQS65.2	**SQS65.2**
AC 24 V	DC 0...10 V 0...1000 Ohm	35	Yes (8 s)	N4573	BPZ:SQS65.5	**SQS65.5**

Modulating control valves with magnetic actuator, PN16, external thread

MXG461..

Mixing and 2-port valves PN 16 with magnetic actuator for modulating control of chilled or low-temperature hot water systems in closed circuits. With positioning control, position feedback signal, spring return function and manual control.

Data sheet	N4455
Operating voltage	AC 24 V
Positioning signal	DC 0...10 V DC 2...10 V DC 4..20 mA
Positioning time	<2 s
Spring return function	A->AB closed
Position feedback	DC 0...10 V
Degree of protection	IP54
Ambient temperature, operation	-5...45 °C
Mounting position	Upright to horizontal
Permissible operating pressure	1000 kPa
PN class	PN 16
Leakage rate	< 0.02 % of k_{vs} value
Leakage rate bypass	< 0.2 % of k_{vs} value
Medium temperature	1...130 °C
Valve characteristic	Equal-percentage Linear
Stroke resolution $\Delta H/H_{100}$	1:1000
Material, valve body	Cast iron EN-GJL-250
Material, inside set	CrNi steel/brass

When used as a 2-port valve, port B must be closed off with the accessories (nut, cover, gasket) provided with the valve.
MXG461..P valves for media containing mineral oils (data sheet N4455)
MXG461..M silicon-free valve version, DN15...DN50 (data sheet N4455)
MXG461.. valves are UL listed

CAUTION!
Valve may only be used as a mixing or 2-port valve, not as a diverting valve.

Range overview threaded valves MXG461..

DN	k_{vs} [m³/h]	Δp_{max} [kPa]	Δp_s [kPa]	Power consumption [VA]	Connecting thread	Stock No.	Product No.
15	0.6	300	300	29	G 1 B "	BPZ:MXG461.15-0.6	**MXG461.15-0.6**
15	1.5	300	300	29	G 1 B "	BPZ:MXG461.15-1.5	**MXG461.15-1.5**
15	3	300	300	29	G 1 B "	BPZ:MXG461.15-3.0	**MXG461.15-3.0**
20	5	300	300	29	G 1¼ B "	BPZ:MXG461.20-5.0	**MXG461.20-5.0**
25	8	300	300	29	G 1½ B "	BPZ:MXG461.25-8.0	**MXG461.25-8.0**
32	12	300	300	29	G 2 B "	BPZ:MXG461.32-12	**MXG461.32-12**
40	20	300	300	44	G 2¼ B "	BPZ:MXG461.40-20	**MXG461.40-20**
50	30	300	300	44	G 2¾ B "	BPZ:MXG461.50-30	**MXG461.50-30**

Fittings ALG..3 must be ordered as separate items and are also supplied as such.
Δp_s for use as 2-port valve

Globe and pressure independent combi valves
2-port and 3-port Threaded valves with magnetic actuators, PN16: MXG461..

Field of application for MXG461..

Medium	Temperature	Operating pressure	Sealing gland	Suffix
Chilled water Water with anti-freeze Low-temperature hot water	≤ 130 °C	16 bar	EPDM O-ring	--
Mineral oil SAE05...SAE50, mineral-oil-based diesel fuels, heat transfer oils	≤ 130 °C	16 bar	Viton-O-ring	P

Accessories for MXG461..

Product Title	Data sheet	Stock No.	Product No.
Signal converter DC 0...20 V Phs to DC 0...10 V	N5143	BPZ:SEZ91.6	**SEZ91.6**
Replacement electronic for MXG461.., MXF461.. and MXG461S.., DN15...32	N4455	BPZ:ASE1	**ASE1**
Replacement electronic for MXG461.., MXF461.., DN40...65	N4455	BPZ:ASE2	**ASE2**

Fittings: Set of 3

Cylindric thread to ISO 228/1 on the valve side
Cylindric thread to ISO 7/1 on the pipe side
Each ALG..3 fitting consists of 3 cap nuts, 3 insert nuts and 3 flat seals

DN	Connecting thread, valve side	Connecting thread, pipe side	Material	Stock No.	Product No.
15	G 1 "	Rp ½ "	Phosphated malleable cast iron	BPZ:ALG153	**ALG153**
20	G 1¼ "	Rp ¾ "	Phosphated malleable cast iron	BPZ:ALG203	**ALG203**
25	G 1½ "	Rp 1 "	Phosphated malleable cast iron	BPZ:ALG253	**ALG253**
32	G 2 "	Rp 1¼ "	Phosphated malleable cast iron	BPZ:ALG323	**ALG323**
40	G 2¼ "	Rp 1½ "	Phosphated malleable cast iron	BPZ:ALG403	**ALG403**
50	G 2¾ "	Rp 2 "	Phosphated malleable cast iron	BPZ:ALG503	**ALG503**

Modulating control valves with magnetic actuator, PN16, external thread, DVGW

MXG461B..

Mixing and 2-port valves PN 16 with magnetic actuator for modulating control of DHW (mains water, water in open circuits), chilled water or low-temperature hot water.
With positioning control, position feedback signal, spring return function and manual control.

Data sheet	N4461
Operating voltage	AC 24 V DC 20...30 V
PN class	PN 16
Positioning signal	DC 0...10 V DC 2...10 V DC 0...20 mA DC 4...20 mA DC 0...20 V Phs
Positioning time	<2 s
Spring return function	A->AB closed
Position feedback	DC 0...10 V DC 2...10 V DC 0...20 mA DC 4...20 mA
Degree of protection	IP31
Ambient temperature, operation	-5...45 °C
Mounting position	Upright to horizontal
Permissible operating pressure	1600 kPa
Leakage rate	< 0.05 % of k_{vs} value
Leakage rate bypass	< 0.2 % of k_{vs} value
Medium temperature	-20...130 °C
Valve characteristic	Equal-percentage Linear
Stroke resolution $\Delta H/H_{100}$	1:1000
Material, valve body	Red brass CC491K, low-lead amount
Material, inside set	CrNi steel
Product conformity	DVGW approved

CAUTION!
Valve may only be used as a mixing or 2-port valve, not as a diverting valve.

Range overview threaded valves MXG461B..

DN	k_{vs} [m³/h]	Δp_{max} [kPa]	Δp_s [kPa]	Power consumption [VA]	Connecting thread	Stock No.	Product No.
15	0.6	1000	1000	33	G 1 B "	BPZ:MXG461B15-0.6	**MXG461B15-0.6**
15	1.5	1000	1000	33	G 1 B "	BPZ:MXG461B15-1.5	**MXG461B15-1.5**
15	3	1000	1000	33	G 1 B "	BPZ:MXG461B15-3	**MXG461B15-3**
20	5	800	800	33	G 1¼ B "	BPZ:MXG461B20-5	**MXG461B20-5**
25	8	700	700	33	G 1½ B "	BPZ:MXG461B25-8	**MXG461B25-8**
32	12	600	600	43	G 2 B "	BPZ:MXG461B32-12	**MXG461B32-12**
40	20	600	600	43	G 2¼ B "	BPZ:MXG461B40-20	**MXG461B40-20**
50	30	600	600	65	G 2¾ B "	BPZ:MXG461B50-30	**MXG461B50-30**

The fittings are made of bronze / brass and supplied with the valve.
Δp_s for use as 2-port valve
MXG461B.. valves with magnetic actuators are UL-listed.

Accessories for MXG461B..

Product Title	Data sheet	Stock No.	Product No.
Replacement electronic for MXG461B.., MVF461H.. and MXG462S..		BPZ:ASE12	**ASE12**

Modulating control valves with magnetic actuator, PN16, external thread, stainless steel

MXG461S..

Mixing and 2-port valves with magnetic actuator for modulating control of general and industrial HVAC plants. For open and closed circuits. With positioning control, position feedback signal, spring return function and manual control.

Data sheet	N4465
Operating voltage	AC 24 V
Positioning signal	DC 0...10 V DC 2...10 V DC 4...20 mA
Positioning time	< 1 s
Spring return function	A -> AB closed
Position feedback	DC 0...10 V
Degree of protection	IP54
Ambient temperature, operation	-5...45 °C
Mounting position	Upright to horizontal
PN class	PN 16
Permissible operating pressure	1000 kPa
Leakage rate	< 0.02 % of k_{vs} value
Leakage rate bypass	< 0.2 % of k_{vs} value
Medium temperature	1...130 °C
Valve characteristic	Equal-percentage Linear
Stroke resolution $\Delta H/H_{100}$	1:1000
Material, valve body	CrNi cast stainless steel
Material, inside set	CrNi steel

CAUTION!
Valve may only be used as a mixing or 2-port valve, not as a diverting valve.

7

Range overview threaded valves MXG461S..

DN	k_{vs} [m³/h]	Δp_{max} [kPa]	Δp_s [kPa]	Power consumption [VA]	Connecting thread	Stock No.	Product No.
15	1.5	300	300	29	G 1 B "	BPZ:MXG461S15-1.5	**MXG461S15-1.5**
20	5.0	300	300	29	G 1¼ B "	BPZ:MXG461S20-5.0	**MXG461S20-5.0**
25	8.0	300	300	29	G 1½ B "	BPZ:MXG461S25-8.0	**MXG461S25-8.0**
32	12	300	300	29	G 2 B "	BPZ:MXG461S32-12	**MXG461S32-12**

Union fittings made of stainless steel must delivered by thirds.
Δp_s for use as 2-port valve
MXG461S.. valves with magnetic actuators are UL-listed.

Accessories for MXG461S..

Product Title	Data sheet	Stock No.	Product No.
Signal converter DC 0...20 V Phs to DC 0...10 V	N5143	BPZ:SEZ91.6	**SEZ91.6**
Replacement electronic for MXG461.., MXF461.. and MXG461S.., DN15...32	N4455	BPZ:ASE1	**ASE1**
Replacement electronic for MXG461.., MXF461.., DN40...65	N4455	BPZ:ASE2	**ASE2**

Globe and pressure independent combi valves
2-port and 3-port Threaded valves with magnetic actuators, PN16: MXG462S..

MXG462S..

Modulating control valves with magnetic actuator, PN16, external thread, stainless steel

Mixing and 2-port valves with magnetic actuator for modulating control of general and industrial HVAC plants. For open and closed circuits. With positioning control, position feedback signal, spring return function and manual control.

Data sheet	N4466
Operating voltage	AC 24 V DC 20...30 V
PN class	PN 16
Positioning signal	DC 0...10 V DC 2...10 V DC 0...20 mA DC 4...20 mA DC 0...20 V Phs
Positioning time	<2 s
Spring return function	A->AB closed
Position feedback	DC 0...10 V DC 2...10 V DC 0...20 mA DC 4...20 mA
Degree of protection	IP31
Ambient temperature, operation	-5...45 °C
Mounting position	Upright to horizontal
Permissible operating pressure	1600 kPa
Leakage rate	< 0.05 % of k_{vs} value
Leakage rate bypass	< 0.2 % of k_{vs} value
Medium temperature	-20...130 °C
Valve characteristic	Equal-percentage Linear
Stroke resolution $\Delta H/H_{100}$	1:1000
Material, valve body	CrNi stainless steel
Material, inside set	CrNi steel

CAUTION!
Valve may only be used as a mixing or 2-port valve, not as a diverting valve. When used as a 2-port valve, port B must be closed off with the cover supplied with the valve and a cap nut of the fitting.

Range overview threaded valves MXG462S..

DN	k_{vs} [m³/h]	Δp_{max} [kPa]	Δp_s [kPa]	Power consumption [VA]	Connecting thread	Stock No.	Product No.
50	30	600	600	65	G 2¾ B "	BPZ:MXG462S50-30	**MXG462S50-30**

Union fittings made of stainless steel must be delivered by thirds.
Δp_s for use as 2-port valve
MXG462S.. valves with magnetic actuators are UL-listed.

Accessories for MXG462S..

Product Title	Data sheet	Stock No.	Product No.
Replacement electronic for MXG461B.., MVF461H.. and MXG462S..		BPZ:ASE12	**ASE12**

Fittings with threaded connections: Set of 2

Cylindric thread to ISO 228-1 on the valve side. Tapered R-externally or cylindrical Rp-internally threaded to ISO 7-1 on the pipe side.
Each fitting set ALG..2 consists of 2 cap nuts, 2 insert nuts and 2 flat seals.

Connecting thread, valve side	Connecting thread, pipe side	Material	Stock No.	Product No.
G 1 "	Rp ½ "	Phosphated malleable cast iron	BPZ:ALG152	**ALG152**
G 1 "	Rp ½ "	Brass	S55846-Z100	**ALG152B**
G 1¼ "	Rp ¾ "	Phosphated malleable cast iron	BPZ:ALG202	**ALG202**
G 1¼ "	Rp ¾ "	Brass	S55846-Z102	**ALG202B**
G 1½ "	Rp 1 "	Phosphated malleable cast iron	BPZ:ALG252	**ALG252**
G 1½ "	Rp 1 "	Brass	S55846-Z104	**ALG252B**
G 2 "	Rp 1¼ "	Phosphated malleable cast iron	BPZ:ALG322	**ALG322**
G 2 "	Rp 1¼ "	Brass	S55846-Z106	**ALG322B**
G 2¼ "	Rp 1½ "	Phosphated malleable cast iron	BPZ:ALG402	**ALG402**
G 2¼ "	Rp 1½ "	Brass	S55846-Z108	**ALG402B**
G 2¾ "	Rp 2 "	Phosphated malleable cast iron	BPZ:ALG502	**ALG502**
G 2¾ "	Rp 2 "	Brass	S55846-Z110	**ALG502B**

7

Fittings with threaded connections: Set of 3

Cylindric thread to ISO 228-1 on the valve side. Tapered R-externally or cylindrical Rp-internally threaded to ISO 7-1 on the pipe side.
Each fitting set ALG..3 consists of 3 cap nuts, 3 insert nuts and 3 flat seals.

Connecting thread, valve side	Connecting thread, pipe side	Material	Stock No.	Product No.
G 1 "	Rp ½ "	Phosphated malleable cast iron	BPZ:ALG153	**ALG153**
G 1 "	Rp ½ "	Brass	S55846-Z101	**ALG153B**
G 1¼ "	Rp ¾ "	Phosphated malleable cast iron	BPZ:ALG203	**ALG203**
G 1¼ "	Rp ¾ "	Brass	S55846-Z103	**ALG203B**
G 1½ "	Rp 1 "	Phosphated malleable cast iron	BPZ:ALG253	**ALG253**
G 1½ "	Rp 1 "	Brass	S55846-Z105	**ALG253B**
G 2 "	Rp 1¼ "	Phosphated malleable cast iron	BPZ:ALG323	**ALG323**
G 2 "	Rp 1¼ "	Brass	S55846-Z107	**ALG323B**
G 2¼ "	Rp 1½ "	Phosphated malleable cast iron	BPZ:ALG403	**ALG403**
G 2¼ "	Rp 1½ "	Brass	S55846-Z109	**ALG403B**
G 2¾ "	Rp 2 "	Phosphated malleable cast iron	BPZ:ALG503	**ALG503**
G 2¾ "	Rp 2 "	Brass	S55846-Z111	**ALG503B**

Applications requiring union fittings with DVGW approval must be delivered by thirds.

Globe and pressure independent combi valves
Mini Combi Valves (MCV), DIN: VPD.. / VPE..

VPD../VPE..

MiniCombiValves (MCV)

Combivalves with presetting, PN 10, with connections according to EN215 for
- ventilation and air conditioning plants for control on the water side and automatic hydraulic balancing of terminal units, such as fan coils, induction units, and in heat exchangers for heating or cooling.
- heating zones like self-contained heating systems, apartments, individual rooms, etc.
- closed circuits

Data sheet	N2185
Medium temperature	1...90 °C
Permissible operating pressure	1000 kPa
Material, valve body	Brass, nickel-plated
Material, inside set	EPDM
PN class	PN 10

Suitable media: Water (to VDI 2035), water with anti-freeze.

The valves can be operated with Siemens actuators type SSA.. / STA.. and thermostatic actuators RTN..

Range overview straight valves VPD.. to DIN

DN	Connecting thread	Volumetric flow V [l/h]	Δp_w [kPa]	Δp_{min} [kPa]	Stock No.	Product No.
10	Rp/R ⅜ "	45	5	6	BPZ:VPD110A-45	**VPD110A-45**
10	Rp/R ⅜ "	90	5	8	BPZ:VPD110A-90	**VPD110A-90**
10	Rp/R ⅜ "	145	5	10	BPZ:VPD110A-145	**VPD110A-145**
15	Rp/R ½ "	45	5	6	BPZ:VPD115A-45	**VPD115A-45**
15	Rp/R ½ "	90	5	8	BPZ:VPD115A-90	**VPD115A-90**
15	Rp/R ½ "	145	5	10	BPZ:VPD115A-145	**VPD115A-145**
10	Rp/R ⅜ "	200	10	20	BPZ:VPD110B-200	**VPD110B-200**
15	Rp/R ½ "	200	10	20	BPZ:VPD115B-200	**VPD115B-200**

Δp_w = effective pressure (controlled differential pressure)
Δp_{min} = required minimum differential pressure across valve
$\dot{v}$= volumetric flow at a stroke of 0.5 mm

Range overview angle valves VPE.. to DIN

DN	Connecting thread	Volumetric flow V [l/h]	Δp_w [kPa]	Δp_{min} [kPa]	Stock No.	Product No.
10	Rp/R ⅜ "	45	5	6	BPZ:VPE110A-45	**VPE110A-45**
10	Rp/R ⅜ "	90	5	8	BPZ:VPE110A-90	**VPE110A-90**
10	Rp/R ⅜ "	145	5	10	BPZ:VPE110A-145	**VPE110A-145**
15	Rp/R ½ "	45	5	6	BPZ:VPE115A-45	**VPE115A-45**
15	Rp/R ½ "	90	5	8	BPZ:VPE115A-90	**VPE115A-90**
15	Rp/R ½ "	145	5	10	BPZ:VPE115A-145	**VPE115A-145**
10	Rp/R ⅜ "	200	10	20	BPZ:VPE110B-200	**VPE110B-200**
15	Rp/R ½ "	200	10	20	BPZ:VPE115B-200	**VPE115B-200**

Δp_w = effective pressure (controlled differential pressure)
Δp_{min} = required minimum differential pressure across valve
$\dot{v}$= volumetric flow at a stroke of 0.5 mm

Combinable actuator to VPD.. / VPE..

Operating voltage	Positioning signal	Positioning time [s]	Color	Cable length [m]	Data sheet	Stock No.	Product No.
					N2111	BPZ:RTN51	**RTN51**
					N4211	BPZ:RTN51G	**RTN51G**
					N2111	BPZ:RTN71	**RTN71**
					N2111	BPZ:RTN81	**RTN81**
AC 230 V	2-position	210	Black	1	N4884	S55174-A101	STA23
AC 230 V	2-position	210	White		N4884	S55174-A110	STA23/00
AC 230 V	2-position	210	Black		N4884	S55174-A118	STA23B/00
AC 230 V	2-position	210	White		N4884	S55174-A114	STA23MP/00
AC 24 V DC 24 V	2-position PDM	270	Black	1	N4884	S55174-A100	STA73
AC 24 V DC 24 V	2-position PDM	270	White		N4884	S55174-A109	STA73/00
AC 24 V DC 24 V	2-position PDM	270	Black		N4884	S55174-A117	STA73B/00
AC 24 V DC 24 V	2-position PDM	270	White		N4884	S55174-A113	STA73MP/00
AC 24 V DC 24 V	2-position PDM/parallel operation	270	White		N4884	S55174-A115	STA73PR/00
AC 230 V	3-position	150	White/Gray	1.5	N4893	BPZ:SSA31	**SSA31**
AC 230 V	3-position	150	White/Gray	1.5	N4893	BPZ:SSA31.1	**SSA31.1**
AC 230 V	3-position	150	White/Gray		N4893	BPZ:SSA31/00	**SSA31/00**
AC 24 V DC 24 V	DC 0...10 V	34	White/Gray	1.5	N4893	BPZ:SSA61	**SSA61**
AC 24 V DC 24 V	DC 0...10 V	34	White/Gray		N4893	BPZ:SSA61/00	**SSA61/00**
AC 24 V	3-position	150	White/Gray	1.5	N4893	BPZ:SSA81	**SSA81**
AC 24 V	3-position	150	White/Gray	1.5	N4893	BPZ:SSA81.1	**SSA81.1**
AC 24 V	3-position	150	White/Gray		N4893	BPZ:SSA81/00	**SSA81/00**
AC 24 V	DC 0...10 V	30	Black	1	N4884	S55174-A104	STA63

For suitable combination of actuator STA.. and connection cable ASY.., see chapter introduction page 7-4.

7

NEW PRODUCT

Accessories for VPD../VPE..

AV100-VP1

Seal insertion for VPD.. and VPE.. MiniCombiValves (MCV)

Valve insert for use with all types of valves of the VPD.. and VPE.. ranges.

Data sheet N2100

Stock No.	Product No.
BPZ:AV100-VP1	**AV100-VP1**

7

Combi valves PN25, externally threaded

VPP46..

Pre-adjustable Combi valves, PN 25, externally threaded for
- ventilation and air conditioning plants for control on the water side and automatic hydraulic balancing of terminal units, such as fan coils, induction units, and in heat exchangers for heating or cooling.
- heating zones like self-contained heating systems, apartments, individual rooms, etc.
- closed circuits

Volumetric flow 30...1330 l/h. With or without differential pressure test points.

Data sheet	N4855
Stroke	To DN 15: 2.5 mm DN 20: 5 mm
Medium temperature	1...110 °C
Permissible operating pressure	2500 kPa
Valve characteristic	Linear
Material, valve body	Dezincification resistant brass, DR, CW602N
Material, inside set	Dezincification resistant brass (DR), CW602N, stainless steel, PPS
PN class	PN 25

Range overview combi valves VPP46..

DN	Connecting thread	Volumetric flow Vmin [l/h]	Volumetric flow V [l/h]	Stock No.	Product No.
10	G ½ "	30	200	S55264-V101	**VPP46.10L0.2**
10	G ½ "	30	200	S55264-V105	**VPP46.10L0.2Q**
15	G ¾ "	30	200	S55264-V102	**VPP46.15L0.2**
15	G ¾ "	30	200	S55264-V106	**VPP46.15L0.2Q**
15	G ¾ "	100	575	S55264-V103	**VPP46.15L0.6**
15	G ¾ "	100	575	S55264-V107	**VPP46.15L0.6Q**
20	G 1 "	220	1330	S55264-V104	**VPP46.20F1.4**
20	G 1 "	220	1330	S55264-V108	**VPP46.20F1.4Q**

The VPP46..Q types are equipped with P/T Plugs

Overview differential pressures

STA.. Δp_{min} [kPa]	STA.. Δp_{max} [kPa]	SUA.. Δp_{min} [kPa]	SUA.. Δp_{max} [kPa]	SSA.. Δp_{min} [kPa]	SSA.. Δp_{max} [kPa]	Stock No.	Product No.
15	400	15	400	15	400	S55264-V101	**VPP46.10L0.2**
15	400	15	400	15	400	S55264-V105	**VPP46.10L0.2Q**
15	400	15	400	15	400	S55264-V102	**VPP46.15L0.2**
15	400	15	400	15	400	S55264-V106	**VPP46.15L0.2Q**
15	400	15	400	15	400	S55264-V103	**VPP46.15L0.6**
15	400	15	400	15	400	S55264-V107	**VPP46.15L0.6Q**
				20	400	S55264-V104	**VPP46.20F1.4**
				20	400	S55264-V108	**VPP46.20F1.4Q**

Globe and pressure independent combi valves
Combi valves for rooms and zones, PN 25: VPI46..

VPI46..

Combi valves PN25, internally threaded

Pre-adjustable Combi valves, PN 25, internally threaded for
- ventilation and air conditioning plants for control on the water side and automatic hydraulic balancing of terminal units, such as fan coils, induction units, and in heat exchangers for heating or cooling.
- heating zones like self-contained heating systems, apartments, individual rooms, etc.
- closed circuits

Volumetric flow 30...1330 l/h. With or without differential pressure test points.

Data sheet	N4855
Stroke	To DN 15: 2.5 mm DN 20: 5 mm
Medium temperature	1...110 °C
Permissible operating pressure	2500 kPa
Valve characteristic	Linear
Material, valve body	Dezincification resistant brass, DR, CW602N
Material, inside set	Dezincification resistant brass (DR), CW602N, stainless steel, PPS
PN class	PN 25

Range overview combi valves VPI46..

DN	Connecting thread	Volumetric flow Vmin [l/h]	Volumetric flow V [l/h]	Stock No.	Product No.
15	Rp ½ "	30	200	S55264-V109	**VPI46.15L0.2**
15	Rp ½ "	30	200	S55264-V112	**VPI46.15L0.2Q**
15	Rp ½ "	100	575	S55264-V110	**VPI46.15L0.6**
15	Rp ½ "	100	575	S55264-V113	**VPI46.15L0.6Q**
20	Rp ¾ "	220	1330	S55264-V111	**VPI46.20F1.4**
20	Rp ¾ "	220	1330	S55264-V114	**VPI46.20F1.4Q**

The VPI46..Q types are equipped with P/T Plugs

Overview differential pressures

STA.. Δp_{min} [kPa]	STA.. Δp_{max} [kPa]	SUA.. Δp_{min} [kPa]	SUA.. Δp_{max} [kPa]	SSA.. Δp_{min} [kPa]	SSA.. Δp_{max} [kPa]	Stock No.	Product No.
15	400	15	400	15	400	S55264-V109	**VPI46.15L0.2**
15	400	15	400	15	400	S55264-V112	**VPI46.15L0.2Q**
15	400	15	400	15	400	S55264-V110	**VPI46.15L0.6**
15	400	15	400	15	400	S55264-V113	**VPI46.15L0.6Q**
				20	400	S55264-V111	**VPI46.20F1.4**
				20	400	S55264-V114	**VPI46.20F1.4Q**

Accessories for VPP46.. / VPI46..

Product Title	Stock No.	Product No.
Electronic manometer for Siemens combi valves	BPZ:ALE10	**ALE10**
Measuring lines and tips for Siemens combi valves	BPZ:ALE11	**ALE11**
Spare nipples for VPI45.., set of 2, for VPI45..	BPZ:ALP45	**ALP45**
Blanking plug for P/T ports	S55264-V115	ALP46
Drain ball valve inclusive O-ring	S55264-V116	ALP47
Combined P/T port and drain ball valve with red ribbon	S55264-V117	ALP48
Long P/T ports (set of 2 pieces)	S55264-V118	ALP49
Black spare valve protection cap (set of 2 pieces)	S55264-V119	ALP50

Combinable actuator to VPP46.. / VPI46..

Operating voltage	Positioning signal	Positioning time [s]	Color	Cable length [m]	Data sheet	Stock No.	Product No.
AC 24 V	DC 0...10 V	30	Black	1	N4884	S55174-A104	STA63
AC 230 V	2-position	210	White		N4884	S55174-A110	STA23/00
AC 230 V	2-position	210	Black		N4884	S55174-A118	STA23B/00
AC 230 V	2-position	210	White		N4884	S55174-A114	STA23MP/00
AC 24 V DC 24 V	2-position PDM	270	White		N4884	S55174-A109	STA73/00
AC 24 V DC 24 V	2-position PDM	270	Black		N4884	S55174-A117	STA73B/00
AC 24 V DC 24 V	2-position PDM	270	White		N4884	S55174-A113	STA73MP/00
AC 230 V	3-position	150	White/Gray	1.5	N4893	BPZ:SSA31	**SSA31**
AC 24 V	3-position	150	White/Gray	1.5	N4893	BPZ:SSA81	**SSA81**
AC 24 V DC 24 V	DC 0...10 V	34	White/Gray	1.5	N4893	BPZ:SSA61	**SSA61**
AC 230 V	3-position	150	White/Gray	1.5	N4893	BPZ:SSA31.1	**SSA31.1**
AC 24 V	3-position	150	White/Gray	1.5	N4893	BPZ:SSA81.1	**SSA81.1**
AC 230 V	3-position	150	White/Gray		N4893	BPZ:SSA31/00	**SSA31/00**
AC 24 V	3-position	150	White/Gray		N4893	BPZ:SSA81/00	**SSA81/00**
AC 24 V DC 24 V	DC 0...10 V	34	White/Gray		N4893	BPZ:SSA61/00	**SSA61/00**
AC 230 V	2-position (SPST)	10 s @ 50 Hz	Gray	1.5	N4830	S55176-A102	**SUA21/1**

For suitable combination of actuator STA.. and connection cable ASY.., see chapter introduction page 7-4.

7

NEW PRODUCT

Globe and pressure independent combi valves
Combi valves, PN 25: VPI45..

VPI45..

Combi valves PN25, internally threaded

Combivalves with presetting with internal thread for volume flow of 90...8500 l/h. With or without pressure measuring points for

- ventilation and air conditioning plants for control on the water side and automatic hydraulic balancing of terminal units, such as fan coils, induction units, and in heat exchangers for heating or cooling.
- heating zones like self-contained heating systems, apartments, individual rooms, etc.
- closed circuits

Data sheet	N4853
Stroke	To DN 32: 5 mm From DN 40: 6.5 mm
Medium temperature	1...120 °C
Permissible operating pressure	2500 kPa
Valve characteristic	Linear
Material, valve body	Dezincification resistant brass, DR, CW602N
Material, inside set	Dezincification resistant brass (DR), CW602N, CrNi steel
PN class	PN 25

Range overview combi valves VPI45..

DN	Connecting thread	Volumetric flow Vmin [l/h]	Volumetric flow V [l/h]	Stock No.	Product No.
15	Rp ½ "	90	620	BPZ:VPI45.15F0.5	**VPI45.15F0.5**
15	Rp ½ "	90	620	BPZ:VPI45.15F0.5Q	**VPI45.15F0.5Q**
15	Rp ½ "	290	1730	BPZ:VPI45.15F1.5	**VPI45.15F1.5**
15	Rp ½ "	290	1730	BPZ:VPI45.15F1.5Q	**VPI45.15F1.5Q**
20	Rp ¾ "	160	1050	BPZ:VPI45.20F0.9	**VPI45.20F0.9**
20	Rp ¾ "	160	1050	BPZ:VPI45.20F0.9Q	**VPI45.20F0.9Q**
20	Rp ¾ "	350	2040	BPZ:VPI45.20F2	**VPI45.20F2**
20	Rp ¾ "	350	2040	BPZ:VPI45.20F2Q	**VPI45.20F2Q**
25	Rp 1 "	280	1720	BPZ:VPI45.25F1.5	**VPI45.25F1.5**
25	Rp 1 "	280	1720	BPZ:VPI45.25F1.5Q	**VPI45.25F1.5Q**
25	Rp 1 "	350	2040	BPZ:VPI45.25F2	**VPI45.25F2**
25	Rp 1 "	350	2040	BPZ:VPI45.25F2Q	**VPI45.25F2Q**
32	Rp 1¼ "	560	3050	BPZ:VPI45.32F3	**VPI45.32F3**
32	Rp 1¼ "	560	3050	BPZ:VPI45.32F3Q	**VPI45.32F3Q**
40	Rp 1½ "	2355	7105	BPZ:VPI45.40F7	**VPI45.40F7**
40	Rp 1½ "	2355	7105	BPZ:VPI45.40F7Q	**VPI45.40F7Q**
50	Rp 2 "	2664	8586	BPZ:VPI45.50F8.5	**VPI45.50F8.5**
50	Rp 2 "	2664	8586	BPZ:VPI45.50F8.5Q	**VPI45.50F8.5Q**

The VPI45...Q types are equipped with P/T Plugs

Overview differential pressures

SSD.. Δp_{min} [kPa]	SSD.. Δp_{max} [kPa]	SQD.. Δp_{min} [kPa]	SQD.. Δp_{max} [kPa]	Product No.
16	400			**VPI45.15F0.5**
16	400			**VPI45.15F0.5Q**
18	400			**VPI45.15F1.5**
18	400			**VPI45.15F1.5Q**
16	400			**VPI45.20F0.9**
16	400			**VPI45.20F0.9Q**
22	400			**VPI45.20F2**
22	400			**VPI45.20F2Q**
16	400			**VPI45.25F1.5**
16	400			**VPI45.25F1.5Q**
22	400			**VPI45.25F2**
22	400			**VPI45.25F2Q**
18	400			**VPI45.32F3**
18	400			**VPI45.32F3Q**
		26	400	**VPI45.40F7**
		26	400	**VPI45.40F7Q**
		32	400	**VPI45.50F8.5**
		32	400	**VPI45.50F8.5Q**

Up to Δp_{max} = 400 kPa: leakage rate > 0,05% of volumetric flow V_{100}; Up to Δp_{max} = 230 kPa: leakage rate 0...0,05% of volumetric flow V_{100}

7

Accessories for VPI45..

Product Title	Stock No.	Product No.
Electronic manometer for Siemens combi valves	BPZ:ALE10	**ALE10**
Measuring lines and tips for Siemens combi valves	BPZ:ALE11	**ALE11**
Spare nipples for VPI45.., set of 2, for VPI45..	BPZ:ALP45	**ALP45**
Blanking plug for P/T ports	S55264-V115	ALP46
Drain ball valve inclusive O-ring	S55264-V116	ALP47
Combined P/T port and drain ball valve with red ribbon	S55264-V117	ALP48
Long P/T ports (set of 2 pieces)	S55264-V118	ALP49
Black spare valve protection cap (set of 2 pieces)	S55264-V119	ALP50
Pre-setting key for VPI45..	S55264-V120	ALP52

NEW PRODUCT

Combinable actuator to VPI45..

Operating voltage	Positioning signal	Positioning time [s]	Cable length [m]	Data sheet	Stock No.	Product No.
AC 230 V	3-position	150	1.5	N4861	BPZ:SSD31	**SSD31**
AC 24 V DC 24 V	DC 0...10 V	75	1.5	N4861	BPZ:SSD61	**SSD61**
AC 24 V DC 24 V	DC 2...10 V	75	1.5	N4861	BPZ:SSD61.2	**SSD61.2**
AC 24 V DC 24 V	DC 0...10 V	75	1.5	N4861	BPZ:SSD61EP	**SSD61EP**
AC 24 V	3-position	150	1.5	N4861	BPZ:SSD81	**SSD81**
AC 230 V	3-position	150		N4861	BPZ:SSD31/00	**SSD31/00**
AC 24 V DC 24 V	DC 0...10 V	75		N4861	BPZ:SSD61/00	**SSD61/00**
AC 24 V DC 24 V	DC 2...10 V	75		N4861	BPZ:SSD61.2/00	**SSD61.2/00**
AC 24 V DC 24 V	DC 0...10 V	75		N4861	BPZ:SSD61EP/00	**SSD61EP/00**
AC 24 V	3-position	150		N4861	BPZ:SSD81/00	**SSD81/00**
AC 230 V	3-position	170		N4540	BPZ:SQD35.00	**SQD35.00**
AC 24 V	3-position	43		N4540	BPZ:SQD85.03	**SQD85.03**
AC 24 V	DC 0...10 V 0...1000 Ohm	43		N4540	BPZ:SQD65	**SQD65**

Rotary actuators 2 Nm with spring return for ball valves VAI61.. and VBI61..

GQD..9A

Electromotoric actuators for 3-position and modulating control, with spring-return, pre-wired with 0.9 m long connection cables.

Data sheet	N4659
Torque	2 Nm
Ambient temperature, operation	-32...55 °C
Degree of protection	IP40
Angular rotation	90 °
Positioning time	Opening with motor: 30 s Closing with spring: 15 s
Mounting position	Upright to horizontal
Spring return function	Yes
Position feedback	DC 0...10 V (GQD161.9A)

Range overview GQD..9A

Operating voltage [V]	Power consumption	Positioning signal	Stock No.	Product No.
AC 24 DC 24	4 VA 2.5 W	3-position	BPZ:GQD131.9A	**GQD131.9A**
AC 24 DC 24	4.5 VA 3 W	DC 0...10 V	BPZ:GQD161.9A	**GQD161.9A**

7

Actuators for rotary valves
Rotary actuators 5 Nm, without spring-return: GDB..9E

GDB..9E

Rotary actuators 5 Nm without spring return for ball valves VAI61.. and VBI61..

Electromotoric actuators for 3-position and modulating control, without spring return, pre-wired with 0.9 m long connection cables.

Data sheet	N4657
Torque	5 Nm
Ambient temperature, operation	-32...55 °C
Degree of protection	IP54
Angular rotation	90 °
Positioning time	150 s
Mounting position	Upright to horizontal
Spring return function	No
Position feedback	DC 0...10 V (GDB161.9E)

Range overview GDB..9E

Operating voltage [V]	Power consumption	Positioning signal	Stock No.	Product No.
AC 24	2 VA 1 W	3-position	BPZ:GDB131.9E	**GDB131.9E**
AC 24	3 VA 2 W	DC 0...10 V	BPZ:GDB161.9E	**GDB161.9E**
AC 230	2 VA 1 W	3-position	BPZ:GDB331.9E	**GDB331.9E**

Rotary actuators 7 Nm with spring return for ball valves VAI61.. and VBI61..

GMA..9E

Electromotoric actuators for 2-position, 3-position and modulating control, with spring-return, pre-wired with 0.9 m long connection cables.

Data sheet	N4658
Torque	7 Nm
Ambient temperature, operation	-32...55 °C
Degree of protection	IP54
Angular rotation	90 °
Positioning time	Opening with motor: 90 s Closing with spring: 15 s
Mounting position	Upright to horizontal
Spring return function	Yes
Position feedback	

Range overview GMA..9E

Operating voltage [V]	Power consumption	Positioning signal	Stock No.	Product No.
AC 24 DC 24	5 VA 3.5 W	3-position	BPZ:GMA131.9E	**GMA131.9E**
AC 24 DC 24	5 VA 3.5 W	DC 0...10 V	BPZ:GMA161.9E	**GMA161.9E**

7

Actuators for rotary valves
Rotary actuators 10 Nm, without spring-return: GLB..9E

GLB..9E

Rotary actuators 10 Nm without spring return for ball valves VAI61.. and VBI61..

Electromotoric actuators for 3-position and modulating control, without spring return, pre-wired with 0.9 m long connection cables.

Data sheet	N4657
Torque	10 Nm
Ambient temperature, operation	-32...55 °C
Degree of protection	IP54
Angular rotation	90 °
Positioning time	150 s
Mounting position	Upright to horizontal
Spring return function	No
Position feedback	DC 0...10 V (GLB161.9E)

Range overview GLB..9E

Operating voltage [V]	Power consumption	Positioning signal	Stock No.	Product No.
AC 24	2 VA 1 W	3-position	BPZ:GLB131.9E	**GLB131.9E**
AC 24	3 VA 2 W	DC 0...10 V	BPZ:GLB161.9E	**GLB161.9E**
AC 230	2 VA 1 W	3-position	BPZ:GLB331.9E	**GLB331.9E**

Rotary actuators 25 Nm for ball valves VAF51..

GBB..1E

- With self-centering shaft adapter for shaft dia. 8..25.6 mm, square 6...18 mm, min. shaft length 20 mm
- With position indication and adjustable mechanical limit stop
- Button for disengaging the gear train to enable manual control
- With housing made of die-cast aluminium and 0.9 m connecting cable

Data sheet	N4626
Torque	25 Nm
Air damper area	4 m²
Angular rotation	90 °
Positioning time	150 s
Degree of protection	IP54
Dimensions (W x H x D)	100 x 300 x 75 mm

Rotary actuators 25 Nm for ball valves VAF51..

Range overview GBB...1E

Operating voltage V	Positioning signal	Power consumption	Auxiliary switch	Stock No.	Product No.
AC 24	3-position	7 VA / 7 W	0	BPZ:GBB131.1E	**GBB131.1E**
AC 24	3-position	7 VA / 7 W	2	BPZ:GBB135.1E	**GBB135.1E**
AC 24	3-position	7 VA / 7 W	2	BPZ:GBB136.1E	**GBB136.1E**
AC 230	3-position	5 VA / 5 W	0	BPZ:GBB331.1E	**GBB331.1E**
AC 230	3-position	5 VA / 5 W	2	BPZ:GBB335.1E	**GBB335.1E**
AC 230	3-position	5 VA / 5 W	2	BPZ:GBB336.1E	**GBB336.1E**
AC 24	DC 0...10 V	8 VA / 8 W	0	BPZ:GBB161.1E	**GBB161.1E**
AC 24	DC 0...35 V Adjustable	8 VA / 8 W	0	BPZ:GBB163.1E	**GBB163.1E**
AC 24	DC 0...35 V Adjustable	8 VA / 8 W	2	BPZ:GBB164.1E	**GBB164.1E**
AC 24	DC 0...10 V	8 VA / 8 W	2	BPZ:GBB166.1E	**GBB166.1E**

Types GBB135.1E and GBB335.1E also have a feedback potentiometer.

Basic Documentation No.: Z4626

Actuators for rotary valves
Rotary actuators 35 Nm: GIB..1E

GIB..1E

Rotary actuators 35 Nm for ball valves VAF51..

- With self-centering shaft adapter for shaft dia. 8..25.6 mm, square 6...18 mm, min. shaft length 20 mm
- With position indication and adjustable mechanical limit stop
- Button for disengaging the gear train to enable manual override
- With housing made of die-cast aluminium and 0.9 m connecting cable

Data sheet	N4626
Torque	35 Nm
Air damper area	6 m²
Angular rotation	90 °
Positioning time	150 s
Degree of protection	IP54
Dimensions (W x H x D)	100 x 300 x 75 mm

Rotary actuators 35 Nm for ball valves VAF51..

Range overview GIB...1E

Operating voltage V	Positioning signal	Power consumption	Auxiliary switch	Stock No.	Product No.
AC 24	3-position	7 VA / 7 W	0	BPZ:GIB131.1E	**GIB131.1E**
AC 24	3-position	7 VA / 7 W	2	BPZ:GIB135.1E	**GIB135.1E**
AC 24	3-position	7 VA / 7 W	2	BPZ:GIB136.1E	**GIB136.1E**
AC 230	3-position	5 VA / 5 W	0	BPZ:GIB331.1E	**GIB331.1E**
AC 230	3-position	5 VA / 5 W	2	BPZ:GIB335.1E	**GIB335.1E**
AC 230	3-position	5 VA / 5 W	2	BPZ:GIB336.1E	**GIB336.1E**
AC 24	DC 0...10 V	8 VA / 8 W	0	BPZ:GIB161.1E	**GIB161.1E**
AC 24	DC 0...35 V Adjustable	8 VA / 8 W	0	BPZ:GIB163.1E	**GIB163.1E**
AC 24	DC 0...35 V Adjustable	8 VA / 8 W	2	BPZ:GIB164.1E	**GIB164.1E**
AC 24	DC 0...10 V	8 VA / 8 W	2	BPZ:GIB166.1E	**GIB166.1E**

Types GIB135.1E and 335.1E also have a potentiometer.

Basic Documentation No.: Z4626

Electromotoric actuators 10...20 Nm for slipper and butterfly valves

SAL..

Rotary actuator for the operation of 3-port slipper valves VBF21.. and butterfly valves VKF41.. as control and safety shut-off valves in heating, ventilation and air conditioning systems.
With manual adjuster and position indicator, status indication per LED.
Optional functions with auxiliary switches, potentiometer, functional module and stem heater.

SA..81.., SA..61.. are UL listed.

Data sheet	N4502
Angular rotation	90 °
Degree of protection	IP54
Ambient temperature, operation	-15...55 °C
Medium temperature	-10...120 °C
Mounting position	Upright to horizontal
Position feedback	DC 0...10 V (SA..6..)

Range overview SAL31../61../81..

Operating voltage	Positioning signal	Power consumption [VA]	Positioning time [s]	Torque [Nm]	Stock No.	Product No.
AC 230 V	3-position	3.5	120	10	S55162-A108	**SAL31.00T10**
AC 230 V	3-position	6.5	30	10	S55162-A109	**SAL31.03T10**
AC 24 V DC 24 V	DC 0...10 V DC 4...20 mA 0...1000 Ohm	4	120	10	S55162-A100	**SAL61.00T10**
AC 24 V DC 24 V	DC 0...10 V DC 4...20 mA 0...1000 Ohm	8.5	30	10	S55162-A101	**SAL61.03T10**
AC 24 V DC 24 V	3-position	4	120	10	S55162-A104	**SAL81.00T10**
AC 24 V DC 24 V	3-position	4	30	10	S55162-A105	**SAL81.03T10**

Accessories for rotary actuators SAL..

Product Title	Data sheet	Stock No.	Product No.
Auxiliary switch for SA..31../SA..61../SA..81..	N4501	S55845-Z103	**ASC10.51**
Potentiometer 0...1000 Ohm for SA..31../SA..81..	N4501	S55845-Z106	**ASZ7.5/1000**
Potentiometer 0...200 Ohm for SA..31../SA..81..	N4501	S55845-Z105	**ASZ7.5/200**
Potentiometer 0...135 Ohm for SA..31../SA..81..	N4501	S55845-Z104	**ASZ7.5/135**
Weathershield for SAX../SAL..	N4501	S55845-Z109	**ASK39.1**

Mounting sets for SAL..

Product Title	Data sheet	Stock No.	Product No.
Mounting set for SAL.. onto VBF21..	N4502	S55845-Z100	**ASK31N**
Mounting set for SAL.. onto VKF41..	N4502	S55845-Z101	**ASK33N**

Actuators for rotary valves
Rotary actuators 5...20 Nm: SQK.. / SQL..

SQK../SQL..

Electromotoric actuators 5...20 Nm for rotary valves

With reversible synchronous motor. Changeover button for manual / automatic control and manual override. With die-cast aluminium housing and plastic cover. Can be combined with ASK3.. mounting sets to motorize butterfly and slipper valves (corresponding mounting sets must be ordered as separate items).
SQK33..: Angle of rotation adjustable between 70° and 180°.

Angular rotation	90 °
Positioning signal	3-position
Degree of protection	IP44
Mounting position	Upright to horizontal
Ambient temperature, operation	-15...55 °C

All actuators have 2 built-in end switches and space for 1 ancillary unit (auxiliary switch or potentiometer).

for VBF21.., VBG31.., VBI31.., VCI31.., VKF41.., VKF46..

Range overview actuators SQK.. / SQL..

Operating voltage	Power consumption [VA]	Positioning time [s]	Torque [Nm]	Data sheet	Stock No.	Product No.
AC 230 V	3	135	5	N4508	BPZ:SQK34.00	**SQK34.00**
AC 24 V	3	135	5	N4508	BPZ:SQK84.00	**SQK84.00**
AC 230 V	3	125	5	N4506	BPZ:SQK33.00	**SQK33.00**
AC 230 V	6.5	125	20	N4505	BPZ:SQL35.00	**SQL35.00**
AC 24 V	6.5	125	20	N4505	BPZ:SQL85.00	**SQL85.00**

7

Auxiliary switch for actuators SQK.. / SQL..

Product Title	Data sheet	Stock No.	Product No.
Auxiliary switch for SQK34../84..	N4508	BPZ:ASC9.7	**ASC9.7**
Auxiliary switch for SQK33.., SQL33../83../35../85.., SQX32../82..	N4554	BPZ:ASC9.5	**ASC9.5**
Double auxiliary switch for SQL33../83../35../85.., SQX32../82..	N4554	BPZ:ASC9.4	**ASC9.4**
1 auxiliary switch and 1 potentiometer for SQX32../SQX82../SQL33../SQL83../SQL35../SQL85..	N4554	BPZ:ASZ7.4	**ASZ7.4**

Mounting sets

Product Title	Data sheet	Stock No.	Product No.
Mounting set for SQL33.. / 83.. / 35.. / 85.. and slipper valves VBF21..from DN65	N4506	BPZ:ASK31	**ASK31**
Mounting set for SQK33.. / SQL33.. / 83.. and slipper valves VBI31.. / VBG31.. / VCI31.. / VBF21.. up to DN50	N4506	BPZ:ASK32	**ASK32**
Mounting set for SQK33.. / SQL33.. / 83.. and butterfly valves VKF41..	N4506	BPZ:ASK33	**ASK33**
Mounting set for SQL35.. / 85.. and butterfly valves VKF46.., DN40 to DN65	N4136	BPZ:ASK35.1	**ASK35.1**
Mounting set for SQL35.. / 85.. and butterfly valves VKF46.., DN80 to DN125	N4136	BPZ:ASK35.2	**ASK35.2**

Mounting sets for SQK33.. / SQL33.. / 83.. for third-party devices

ASK40

- Suitable for use with the following types of 3-port slipper valves:
- CENTRA DIFFERENTIAL: DR.., DRG.. (DN15...125)
- CENTRA KOMPAKT: DRK.. (DN 15...40), DFK.. (DN25...32)
- ESBE / SHUNT AB: Threaded: R¾"...R½", R2" / flanged: DN20...25, 32...50

- Suitable for use with the following types of 4-port slipper valves:
- CENTRA DUPLEX: ZR.. (DN15...200)
- CENTRA KOMPAKT: ZRK.. (DN20...40)
- ESBE / SHUNT AB: Threaded: R¾"...R½", R2" / flanged: DN20...25, 32...50

Data sheet N4291

	Stock No.	Product No.
	BPZ:ASK40	**ASK40**

Mounting sets for SQK33.. / SQL33.. / 83.. for third-party devices

ASK41

- Suitable for use with the following types of 3-port slipper valves:
- AXA: F3, G3, S3 (DN20...65)
- BUDERUS: 3M (DN20...32), 3F (DN 25...50)
- LOELL: LG3, LF3 (DN20...40)
- MUEHLENBERG: AM3 (DN15...50)
- ONDAMIX (ONDAL): MDM (DN25...32)
- VIESSMANN: DN20...25, 32...40

- Suitable for use with the following types of 4-port slipper valves:
- AXA: F4, G4, S4 (DN20...65)
- BUDERUS: 4M (DN20...32), 4F (DN25...50)
- LOELL: LG4, LF4 (DN20...50)
- MUEHLENBERG: AM4 (DN20...50)
- ONDAMIX (ONDAL): DN20...50
- VIESSMANN: DN20...25, 32...40

Data sheet N4291

	Stock No.	Product No.
	BPZ:ASK41	**ASK41**

Actuators for rotary valves
Rotary actuators 25...2650 Nm: SQL..B

SQL..B..

Electromotoric actuators 25...2650 Nm for butterfly valves VKF42..

Electromotoric actuator for operation of VKF42.. butterfly valves as shutoff and control valves in heating, ventilation and air conditioning plants. No mounting kits required.
Flange connection to EN ISO 5211.

Data sheet	N4520
Angular rotation	90 °
Degree of protection	IP65
Mounting position	Upright to horizontal
Ambient temperature, operation	-20...65 °C
Medium temperature	-10...80 °C
Position feedback	DC 0...10 V (SQL361..)

The actuators have built-in end switches. 1 double auxiliary switch, 1 potentiometer 1000 Ohm can be retrofitted.

Range overview actuators SQL..B..

Operating voltage [V]	Positioning signal	Power consumption [VA]	Positioning time [s]	Torque [Nm]	Stock No.	Product No.
AC 220	2-position (SPDT)	42	11	25	S55164-A100	SQL321B25
AC 220	2-position (SPDT)	88	19	50	S55164-A101	SQL321B50
AC 220	DC 0...10	88	19	50	S55164-A102	SQL361B50
AC 220	2-position (SPDT)	91	39	150	S55164-A103	SQL321B150
AC 220	DC 0...10	91	39	150	S55164-A104	SQL361B150
AC 220	2-position (SPDT)	165	39	270	S55164-A105	SQL321B270
AC 220	DC 0...10	165	39	270	S55164-A106	SQL361B270
AC 220	2-position (SPDT)	194	47	570	S55164-A107	SQL321B570
AC 220	DC 0...10	194	47	570	S55164-A108	SQL361B570
AC 220	2-position (SPDT)	361	76	1400	S55164-A109	SQL321B1400
AC 220	DC 0...10	361	76	1400	S55164-A110	SQL361B1400
AC 220	2-position (SPDT)	436	105	2650	S55164-A111	SQL321B2650
AC 220	DC 0...10	436	105	2650	S55164-A112	SQL361B2650

Accessories for SQL..B..

Product Title	Data sheet	Stock No.	Product No.
Double auxiliary switch	N4520	S55845-Z121	ASC10.20
Double auxiliary switch	N4520	S55845-Z122	**ASC10.21**
Potentiometer for SQL321B50	N4520	S55845-Z123	ASZ10.20
Potentiometer for SQL321B50/SQL321B150	N4520	S55845-Z124	ASZ10.21
Potentiometer for SQL321B270/SQL321B570	N4520	S55845-Z125	ASZ10.22
Potentiometer for SQL321B1400/SQL321B2650	N4520	S55845-Z126	ASZ10.23

Electromotoric actuators 40...1200 Nm for butterfly valves

SQL36..

With reversible asynchronous motor. Direct-acting manual control. Die-cast aluminium housing and plastic manual knob. For VKF46 butterfly valves from DN40 mm, no mounting kits required.

Data sheet	N4505
Angular rotation	90 °
Operating voltage	AC 230 V
Positioning signal	3-position
Degree of protection	IP67
Mounting position	Any
Ambient temperature, operation	-20...70 °C

The actuators have built-in end switches. 1 double auxiliary switch, 1 potentiometer and 1 positioning time module (without SQL36E50..) can be retrofitted.

Range overview actuators SQL36..

Operating voltage [V]	Power consumption [VA]	Positioning time [s]	Torque [Nm]	Stock No.	Product No.
AC 230 V	25	25	40	BPZ:SQL36E50F04	**SQL36E50F04**
AC 230 V	25	25	40	BPZ:SQL36E50F05	**SQL36E50F05**
AC 230 V	166	6	100	BPZ:SQL36E65	**SQL36E65**
AC 230 V	235	12	400	BPZ:SQL36E110	**SQL36E110**
AC 230 V	235	24	1200	BPZ:SQL36E160	**SQL36E160**

Running time with auxiliary module SEZ31.1: variable positioning time 30...180 s (SQL35E65), 60...360 s (SQL36E110) resp. 120...720 s (SQL36E160)

Accessories for SQL36E..

Product Title	Data sheet	Stock No.	Product No.
Auxiliary module, variable positioning time for SQL36E..	N4505	BPZ:SEZ31.1	**SEZ31.1**
Double auxiliary switch for SQL36E	N4505	BPZ:ASC36	**ASC36**
Potentiometer 1000 Ohm for SQL36E..	N4505	BPZ:ASZ36	**ASZ36**

Rotary valves
2-port ball valves, PN40: VAF51..

VAF51..

2-port ball valves, flanged connections, PN25

Ball valves for use in heating, cooling, ventilating and air conditioning systems as a control or shutoff valve.

Data sheet	N4120
Leakage rate	0...0.01 % of k_{vs} value
Angular rotation	90 °
Medium temperature	2...80 °C
Permissible operating pressure	2500 kPa
Valve characteristic	Equal-percentage
Rangeability	> 200
Material, valve body	EN-GJL-250
Material, inside set	Stainless steel (SS-340)
PN class	PN 25

Range overview 2-port valves VAF51..

GBB..1E Δp_{max} [kPa]	GBB..1E Δp_s [kPa]	GIB..1E Δp_{max} [kPa]	GIB..1E Δp_s [kPa]	2 x GIB..1E Δp_{max} [kPa]	2 x GIB..1E Δp_s [kPa]	DN	k_{vs}	Stock No.	Product No.
400	400					65	63	S55232-V100	VAF51.65-63
400	400					80	100	S55232-V101	**VAF51.80-100**
		400	400			100	160	S55232-V102	VAF51.100-160
		300	300			125	200	S55232-V103	VAF51.125-200
				400	400	150	360	S55232-V104	VAF51.150-360

7

Accessories for VAF51..

Product Title	Stock No.	Product No.
Ball valve mounting set, DN65, DN80, DN100	BPZ:ASK77.6	**ASK77.6**
Ball valve mounting set, DN125	BPZ:ASK77.7	**ASK77.7**
Ball valve mounting set, DN150	BPZ:ASK77.8	**ASK77.8**

Combinable actuator for VAF51..

Operating voltage	Positioning signal	Positioning time [s]	Data sheet	Stock No.	Product No.
AC 230 V	3-position	150	N4626	BPZ:GBB331.1E	**GBB331.1E**
AC 24 V	3-position	150	N4626	BPZ:GBB131.1E	**GBB131.1E**
AC 24 V	DC 0...10 V	150	N4626	BPZ:GBB161.1E	**GBB161.1E**
AC 230 V	3-position	150	N4626	BPZ:GIB331.1E	**GIB331.1E**
AC 24 V	3-position	150	N4626	BPZ:GIB131.1E	**GIB131.1E**
AC 24 V	DC 0...10 V	150	N4626	BPZ:GIB161.1E	**GIB161.1E**

2-port ball valves, internally threaded, PN40

VAI61..

Internally threaded connections Rp.. as per ISO 7-1.
For use in heating, ventilating and air conditioning plants as a control or safety shutoff valve. For closed circuits.

Data sheet	N4211
Leakage rate	0...0.001 % of k_{vs} value
Angular rotation	90 °
Medium temperature	1...120 °C
Valve characteristic	Equal-percentage
Rangeability	> 500
Permissible operating pressure	1600 kPa
Material, valve body	Brass UNS C35330 (DZR)
Material, inside set	Brass UNS C35330 (DZR), chromium-plated
PN class	PN 40

Range overview VAI61.. with rotary actuators GMA..9E and GLB..9E

GMA../GLB..9E Δp_{max} [kPa]	GMA../GLB..9E Δp_s [kPa]	Connecting thread	DN	k_{vs}	Stock No.	Product No.
350	1400	Rp ½ "	15	1	BPZ:VAI61.15-1	**VAI61.15-1**
350	1400	Rp ½ "	15	1.6	BPZ:VAI61.15-1.6	**VAI61.15-1.6**
350	1400	Rp ½ "	15	2.5	BPZ:VAI61.15-2.5	**VAI61.15-2.5**
350	1400	Rp ½ "	15	4	BPZ:VAI61.15-4	**VAI61.15-4**
350	1400	Rp ½ "	15	6.3	BPZ:VAI61.15-6.3	**VAI61.15-6.3**
350	1400	Rp ½ "	15	10	BPZ:VAI61.15-10	**VAI61.15-10**
350	1400	Rp ¾ "	20	4	BPZ:VAI61.20-4	**VAI61.20-4**
350	1400	Rp ¾ "	20	6.3	BPZ:VAI61.20-6.3	**VAI61.20-6.3**
350	1400	Rp ¾ "	20	10	BPZ:VAI61.20-10	**VAI61.20-10**
350	1400	Rp 1 "	25	6.3	BPZ:VAI61.25-6.3	**VAI61.25-6.3**
350	1400	Rp 1 "	25	10	BPZ:VAI61.25-10	**VAI61.25-10**
350	1400	Rp 1 "	25	16	BPZ:VAI61.25-16	**VAI61.25-16**
350	1000	Rp 1¼ "	32	10	BPZ:VAI61.32-10	**VAI61.32-10**
240	1000	Rp 1¼ "	32	16	BPZ:VAI61.32-16	**VAI61.32-16**
240	1000	Rp 1¼ "	32	25	BPZ:VAI61.32-25	**VAI61.32-25**
350	800	Rp 1½ "	40	16	BPZ:VAI61.40-16	**VAI61.40-16**
240	800	Rp 1½ "	40	25	BPZ:VAI61.40-25	**VAI61.40-25**
240	800	Rp 1½ "	40	40	BPZ:VAI61.40-40	**VAI61.40-40**
350	600	Rp 2 "	50	25	BPZ:VAI61.50-25	**VAI61.50-25**
240	600	Rp 2 "	50	40	BPZ:VAI61.50-40	**VAI61.50-40**
240	600	Rp 2 "	50	63	BPZ:VAI61.50-63	**VAI61.50-63**

Rotary valves
2-port ball valves, PN40: VAI61..

Range overview VAI61.. with rotary actuators GQD..9A and GDB..9E

GQD..9A Δp_{max} [kPa]	GQD..9A Δp_s [kPa]	GDB..9E Δp_{max} [kPa]	GDB..9E Δp_s [kPa]	Connecting thread	DN	k_{vs}	Stock No.	Product No.
350	1400	350	1400	Rp ½ "	15	1	BPZ:VAI61.15-1	**VAI61.15-1**
350	1400	350	1400	Rp ½ "	15	1.6	BPZ:VAI61.15-1.6	**VAI61.15-1.6**
350	1400	350	1400	Rp ½ "	15	2.5	BPZ:VAI61.15-2.5	**VAI61.15-2.5**
350	1400	350	1400	Rp ½ "	15	4	BPZ:VAI61.15-4	**VAI61.15-4**
350	1400	350	1400	Rp ½ "	15	6.3	BPZ:VAI61.15-6.3	**VAI61.15-6.3**
350	1400	350	1400	Rp ½ "	15	10	BPZ:VAI61.15-10	**VAI61.15-10**
350	1400	350	1400	Rp ¾ "	20	4	BPZ:VAI61.20-4	**VAI61.20-4**
350	1400	350	1400	Rp ¾ "	20	6.3	BPZ:VAI61.20-6.3	**VAI61.20-6.3**
350	1400	350	1400	Rp ¾ "	20	10	BPZ:VAI61.20-10	**VAI61.20-10**
		350	1400	Rp 1 "	25	6.3	BPZ:VAI61.25-6.3	**VAI61.25-6.3**
		350	1400	Rp 1 "	25	10	BPZ:VAI61.25-10	**VAI61.25-10**
		350	1400	Rp 1 "	25	16	BPZ:VAI61.25-16	**VAI61.25-16**

Accessories for VAI61..

Product Title	Stock No.	Product No.
Mounting kit for rotary actuators GMA..1E with spring-return	BPZ:ASK77.2	**ASK77.2**
Mounting kit for rotary actuators GDB..1E and GLB..1E without spring-return	BPZ:ASK77.3	**ASK77.3**
Mounting kits for rotary actuators GQD..1A with spring-return	BPZ:ASK77.4	**ASK77.4**

Combinable actuator for VAI61..

Operating voltage	Positioning signal	Positioning time [s]	Spring return function	Data sheet	Stock No.	Product No.
AC 24 V DC 24 V	3-position	Opening with motor: 30 Closing with spring: 15	Yes	N4659	BPZ:GQD131.9A	**GQD131.9A**
AC 24 V DC 24 V	DC 0...10 V	Opening with motor: 30 Closing with spring: 15	Yes	N4659	BPZ:GQD161.9A	**GQD161.9A**
AC 230 V	3-position	150	No	N4657	BPZ:GDB331.9E	**GDB331.9E**
AC 24 V	3-position	150	No	N4657	BPZ:GDB131.9E	**GDB131.9E**
AC 24 V	DC 0...10 V	150	No	N4657	BPZ:GDB161.9E	**GDB161.9E**
AC 24 V DC 24 V	3-position	Opening with motor: 90 Closing with spring: 15	Yes	N4658	BPZ:GMA131.9E	**GMA131.9E**
AC 24 V DC 24 V	DC 0...10 V	Opening with motor: 90 Closing with spring: 15	Yes	N4658	BPZ:GMA161.9E	**GMA161.9E**
AC 230 V	3-position	150	No	N4657	BPZ:GLB331.9E	**GLB331.9E**
AC 24 V	3-position	150	No	N4657	BPZ:GLB131.9E	**GLB131.9E**
AC 24 V	DC 0...10 V	150	No	N4657	BPZ:GLB161.9E	**GLB161.9E**

VBI61..

3-port ball valves, internally threaded, PN40

Internally threaded connections Rp.. as per ISO 7-1.
For use in heating, ventilating and air conditioning plants as a control or safety shutoff valve. For closed circuits.

Data sheet	N4211
Leakage rate	0...0.001 % of k_{vs} value
Leakage rate bypass	< 1 % of k_{vs} value
Angular rotation	90 °
Medium temperature	1...120 °C
Valve characteristic	Throughport: equal-percentage Bypass: linear
Rangeability	> 500
Permissible operating pressure	1600 kPa
Material, valve body	Brass UNS C35330 (DZR)
Material, inside set	Brass UNS C35330 (DZR), chromium-plated
PN class	PN 40

Range overview VBI61..

GQD..9A Δp_{max} [kPa]	GDB..9E Δp_{max} [kPa]	GMA../GLB..9 E Δp_{max} [kPa]	Connecting thread	DN	k_{vs}	Stock No.	Product No.
350	350	350	Rp ½ "	15	1.6	BPZ:VBI61.15-1.6	**VBI61.15-1.6**
350	350	350	Rp ½ "	15	2.5	BPZ:VBI61.15-2.5	**VBI61.15-2.5**
350	350	350	Rp ½ "	15	4	BPZ:VBI61.15-4	**VBI61.15-4**
350	350	350	Rp ½ "	15	6.3	BPZ:VBI61.15-6.3	**VBI61.15-6.3**
350	350	350	Rp ¾ "	20	4	BPZ:VBI61.20-4	**VBI61.20-4**
350	350	350	Rp ¾ "	20	6.3	BPZ:VBI61.20-6.3	**VBI61.20-6.3**
	350	350	Rp 1 "	25	10	BPZ:VBI61.25-10	**VBI61.25-10**
		240	Rp 1¼ "	32	16	BPZ:VBI61.32-16	**VBI61.32-16**
		240	Rp 1½ "	40	25	BPZ:VBI61.40-25	**VBI61.40-25**
		240	Rp 2 "	50	40	BPZ:VBI61.50-40	**VBI61.50-40**

Accessories for VBI61..

Product Title	Stock No.	Product No.
Mounting kit for rotary actuators GMA..1E with spring-return	BPZ:ASK77.2	**ASK77.2**
Mounting kit for rotary actuators GDB..1E and GLB..1E without spring-return	BPZ:ASK77.3	**ASK77.3**
Mounting kits for rotary actuators GQD..1A with spring-return	BPZ:ASK77.4	**ASK77.4**

Combinable actuator for VBI61..

Operating voltage	Positioning signal	Positioning time [s]	Spring return function	Data sheet	Stock No.	Product No.
AC 24 V DC 24 V	3-position	Opening with motor: 30 Closing with spring: 15	Yes	N4659	BPZ:GQD131.9A	**GQD131.9A**
AC 24 V DC 24 V	DC 0...10 V	Opening with motor: 30 Closing with spring: 15	Yes	N4659	BPZ:GQD161.9A	**GQD161.9A**
AC 230 V	3-position	150	No	N4657	BPZ:GDB331.9E	**GDB331.9E**
AC 24 V	3-position	150	No	N4657	BPZ:GDB131.9E	**GDB131.9E**
AC 24 V	DC 0...10 V	150	No	N4657	BPZ:GDB161.9E	**GDB161.9E**
AC 24 V DC 24 V	3-position	Opening with motor: 90 Closing with spring: 15	Yes	N4658	BPZ:GMA131.9E	**GMA131.9E**
AC 24 V DC 24 V	DC 0...10 V	Opening with motor: 90 Closing with spring: 15	Yes	N4658	BPZ:GMA161.9E	**GMA161.9E**
AC 230 V	3-position	150	No	N4657	BPZ:GLB331.9E	**GLB331.9E**
AC 24 V	3-position	150	No	N4657	BPZ:GLB131.9E	**GLB131.9E**
AC 24 V	DC 0...10 V	150	No	N4657	BPZ:GLB161.9E	**GLB161.9E**

Rotary valves
3-port slipper valves, PN6: VBF21..

VBF21..

3-port slipper valves PN 6 with flanged connections

- With flanged connections to ISO 7005
- For chilled or low-temperature hot water in closed circuits

Data sheet	N4241
Angular rotation	90 °
Leakage rate	DN40...100: 0...0.1 % of k_{vs} value DN125...150: 0...0,5 % of k_{vs} value
Medium temperature	1...120 °C
Valve characteristic	Linear
Permissible operating pressure	600 kPa
Material, valve body	Cast iron EN-GJL-250
Material, inside set	< DN 100: CrNi steel/brass > DN 125: CrNi steel/Rg5
PN class	PN 6

VBF21.40 / VBF21.50 are shipped with manual adjuster.
VBF21.., DN40/50, with SQK34.., SQK84..: Direct mounting
VBF21.., DN40/50, with SQK33.00 requires mounting set ASK32

Range overview 3-port slipper valves VBF21..

SQK.. Δp_{max} [kPa]	SAL..T10 Δp_{max} [kPa]	DN	k_{vs} [m³/h]	Required mounting set	Stock No.	Product No.
30		40	25	Direct SQK33.00: ASK32	BPZ:VBF21.40	**VBF21.40**
30		50	40	Direct SQK33.00: ASK32	BPZ:VBF21.50	**VBF21.50**
	30	65	63	ASK31N	BPZ:VBF21.65	**VBF21.65**
	30	80	100	ASK31N	BPZ:VBF21.80	**VBF21.80**
	30	100	160	ASK31N	BPZ:VBF21.100	**VBF21.100**
	30	125	550	ASK31N	BPZ:VBF21.125	**VBF21.125**
	30	150	820	ASK31N	BPZ:VBF21.150	**VBF21.150**

DN40...50, series 02
DN65...150, series 01

Combinable actuator to VBF21.40 and VBF21.50

Operating voltage	Positioning signal	Positioning time [s]	Required mounting set	Data sheet	Stock No.	Product No.
AC 230 V	3-position	125	Direct SQK33.00: ASK32	N4506	BPZ:SQK33.00	**SQK33.00**
AC 230 V	3-position	135	Direct SQK33.00: ASK32	N4508	BPZ:SQK34.00	**SQK34.00**
AC 24 V	3-position	135	Direct SQK33.00: ASK32	N4508	BPZ:SQK84.00	**SQK84.00**

Combinable actuator to VBF21.65 ... VBF21.150

Operating voltage	Positioning signal	Positioning time [s]	Required mounting set	Data sheet	Stock No.	Product No.
AC 230 V	3-position	120	ASK31N	N4502	S55162-A108	**SAL31.00T10**
AC 230 V	3-position	30	ASK31N	N4502	S55162-A109	**SAL31.03T10**
AC 24 V DC 24 V	DC 0...10 DC 4...20 0...1000	120	ASK31N	N4502	S55162-A100	**SAL61.00T10**
AC 24 V DC 24 V	DC 0...10 DC 4...20 0...1000	30	ASK31N	N4502	S55162-A101	**SAL61.03T10**
AC 24 V DC 24 V	3-position	120	ASK31N	N4502	S55162-A104	**SAL81.00T10**
AC 24 V DC 24 V	3-position	30	ASK31N	N4502	S55162-A105	**SAL81.03T10**

The mounting sets are not included.

Rotary valves
3-port slipper valves,PN10: VBG31..

VBG31..

3-port slipper valves PN 10 with externally threaded connections

- With externally threaded connections to ISO 228-1
- For chilled or low-temperature hot water in closed circuits
- With manual adjuster
- With screwed fittings

Data sheet	N4233
Angular rotation	90 °
Leakage rate	0...0.1 % of k_{vs} value
Medium temperature	1...120 °C
Valve characteristic	Linear
Permissible operating pressure	1000 kPa
Material, valve body	Cast iron EN-GJL-250
Material, inside set	Stainless steel/brass
PN class	PN 10

VBG31.. are supplied with malleable cast iron fittings.

SQK34.., SQK84..: Direct mounting
SQK33.00 requires mounting set ASK32

Range overview 3-port slipper valves VBG31..

SQK.. Δp_{max} [kPa]	Connecting thread	DN	k_{vs} [m³/h]	Required mounting set	Stock No.	Product No.
30	G 1¼ B "	20	6.3	Direct SQK33.00: ASK32	BPZ:VBG31.20	**VBG31.20**
30	G 1½ B "	25	10	Direct SQK33.00: ASK32	BPZ:VBG31.25	**VBG31.25**
30	G 2 B "	32	16	Direct SQK33.00: ASK32	BPZ:VBG31.32	**VBG31.32**
30	G 2¼ B "	40	25	Direct SQK33.00: ASK32	BPZ:VBG31.40	**VBG31.40**

DN20...40, series 02

Combinable actuator to VBG31..

Operating voltage	Positioning signal	Positioning time [s]	Required mounting set	Data sheet	Stock No.	Product No.
AC 230 V	3-position	125	Direct SQK33.00: ASK32	N4506	BPZ:SQK33.00	**SQK33.00**
AC 230 V	3-position	135	Direct SQK33.00: ASK32	N4508	BPZ:SQK34.00	**SQK34.00**
AC 24 V	3-position	135	Direct SQK33.00: ASK32	N4508	BPZ:SQK84.00	**SQK84.00**

3-port slipper valves PN 10 with internally threaded connections

VBI31..

- Internally threaded connections to ISO 7-1
- For chilled or low-temperature hot water in closed circuits
- With manual adjuster

Data sheet	N4232
Angular rotation	90 °
Leakage rate	0...0.1 % of k_{vs} value
Medium temperature	1...120 °C
Valve characteristic	Linear
Permissible operating pressure	1000 kPa
Material, valve body	Cast iron EN-GJL-250
Material, inside set	Stainless steel/brass
PN class	PN 10

SQK34.., SQK84..: Direct mounting
SQK33.00 requires mounting set ASK32

Range overview 3-port slipper valves VBI31..

SQK.. Δp_{max} [kPa]	Connecting thread	DN	k_{vs} [m³/h]	Required mounting set	Stock No.	Product No.
30	Rp ¾ "	20	6.3	Direct SQK33.00: ASK32	BPZ:VBI31.20	**VBI31.20**
30	Rp 1 "	25	10	Direct SQK33.00: ASK32	BPZ:VBI31.25	**VBI31.25**
30	Rp 1¼ "	32	16	Direct SQK33.00: ASK32	BPZ:VBI31.32	**VBI31.32**
30	Rp 1½ "	40	25	Direct SQK33.00: ASK32	BPZ:VBI31.40	**VBI31.40**

DN20...40, series 02

Combinable actuator to VBI31..

Operating voltage	Positioning signal	Positioning time [s]	Required mounting set	Data sheet	Stock No.	Product No.
AC 230 V	3-position	125	Direct SQK33.00: ASK32	N4506	BPZ:SQK33.00	**SQK33.00**
AC 230 V	3-position	135	Direct SQK33.00: ASK32	N4508	BPZ:SQK34.00	**SQK34.00**
AC 24 V	3-position	135	Direct SQK33.00: ASK32	N4508	BPZ:SQK84.00	**SQK84.00**

Rotary valves
4-port slipper valves, PN10: VCI31..

VCI31..

4-port slipper valves PN 10 with internally threaded connections

- Internally threaded connections to ISO 7-1
- For chilled or low-temperature hot water in closed circuits
- With manual adjuster

Data sheet	N4252
Angular rotation	90 °
Medium temperature	1...120 °C
Valve characteristic	Linear
Permissible operating pressure	1000 kPa
Material, valve body	Cast iron EN-GJL-250
Material, inside set	Brass
PN class	PN 10

SQK34.., SQK84..: Direct mounting
SQK33.00 requires mounting set ASK32

Range overview 4-port slipper valves VCI31..

SQK.. Δp_{max} [kPa]	Connecting thread	DN	k_{vs} [m³/h]	Required mounting set	Stock No.	Product No.
30	Rp ¾ "	20	6.3	Direct SQK33.00: ASK32	BPZ:VCI31.20	**VCI31.20**
30	Rp 1 "	25	10	Direct SQK33.00: ASK32	BPZ:VCI31.25	**VCI31.25**
30	Rp 1¼ "	32	16	Direct SQK33.00: ASK32	BPZ:VCI31.32	**VCI31.32**
30	Rp 1½ "	40	25	Direct SQK33.00: ASK32	BPZ:VCI31.40	**VCI31.40**

DN20...40, series 02

Combinable actuator to VCI31..

Operating voltage	Positioning signal	Positioning time [s]	Required mounting set	Data sheet	Stock No.	Product No.
AC 230 V	3-position	125	Direct SQK33.00: ASK32	N4506	BPZ:SQK33.00	**SQK33.00**
AC 230 V	3-position	135	Direct SQK33.00: ASK32	N4508	BPZ:SQK34.00	**SQK34.00**
AC 24 V	3-position	135	Direct SQK33.00: ASK32	N4508	BPZ:SQK84.00	**SQK84.00**

Butterfly valves PN6/10/16 for flanged connections

VKF41..

- With metallic tight-closing for mounting between 2 flanges PN6, PN10 or PN16 to ISO 7005
- For chilled and low-temperature hot water in closed circuits

Data sheet	N4131
Angular rotation	90 °
Medium temperature	-10...120 °C
Permissible operating pressure	1600 kPa
Material, valve body	Cast iron EN-GJL-250
Material, inside set	Stainless steel
PN class	PN 16

SAL..T10, SAL..T20 require mounting set ASK33N
VKF41.., DN 40: SQK33.00 requires mounting set ASK33

Range overview butterfly valves VKF41..

SQK.. Δp_s [kPa]	SAL..T10 Δp_s [kPa]	DN	k_{vs} [m³/h]	Leakage rate	Required mounting set	Stock No.	Product No.
200	500	40	50	0.22% of k_{vs}	ASK33N SQK33.00: ASK33	BPZ:VKF41.40	**VKF41.40**
	500	50	80	0.14% of k_{vs}	ASK33N	BPZ:VKF41.50	**VKF41.50**
	500	65	200	0.09% of k_{vs}	ASK33N	BPZ:VKF41.65	**VKF41.65**
	500	80	400	0.06% of k_{vs}	ASK33N	BPZ:VKF41.80	**VKF41.80**
	500	100	760	0.04% of k_{vs}	ASK33N	BPZ:VKF41.100	**VKF41.100**
	300	125	1000	0.04% of k_{vs}	ASK33N	BPZ:VKF41.125	**VKF41.125**
	250	150	2100	0.02% of k_{vs}	ASK33N	BPZ:VKF41.150	**VKF41.150**
	125	200	4000	0.01% of k_{vs}	ASK33N	BPZ:VKF41.200	**VKF41.200**

Field of application for VKF41..

Medium	Temperature	Operating pressure	Sealing gland
Chilled water Demineralised water (softened) Brine Water with anti-freeze Low-temperature hot water High-temperature hot water	-10...120 °C	16 bar	EPDM O-ring

Combinable actuator to VKF41..

Operating voltage	Torque	Positioning signal	Required mounting set	Data sheet	Stock No.	Product No.
AC 230 V	5 Nm	3-position	ASK33N SQK33.00: ASK33	N4506	BPZ:SQK33.00	**SQK33.00**
AC 230 V	10 Nm	3-position	ASK33N	N4502	S55162-A108	**SAL31.00T10**
AC 230 V	10 Nm	3-position	ASK33N	N4502	S55162-A109	**SAL31.03T10**
AC 24 V DC 24 V	10 Nm	DC 0...10 V DC 4...20 mA 0...1000 Ohm	ASK33N	N4502	S55162-A100	**SAL61.00T10**
AC 24 V DC 24 V	10 Nm	DC 0...10 V DC 4...20 mA 0...1000 Ohm	ASK33N	N4502	S55162-A101	**SAL61.03T10**
AC 24 V DC 24 V	10 Nm	3-position	ASK33N	N4502	S55162-A104	**SAL81.00T10**
AC 24 V DC 24 V	10 Nm	3-position	ASK33N	N4502	S55162-A105	**SAL81.03T10**

Butterfly valves PN16 for flanged connections, with tight shutoff

VKF42..

Butterfly valve is used as motorized or shut-off valves in heating, ventilation and air conditioning systems applications.
- In open and closed circuits
- For 2-position (SPDT) or DC 0...10 V control signals
- For chiller and cooling tower sequencing circuits
- To open or close the flow to a heat exchanger or to complete plant sections

Data sheet	N4119
Angular rotation	90 °
Medium temperature	-10...80 °C
Permissible operating pressure	1600 kPa
Leakage rate	A to ISO 5208 (tight-closing)
Material, valve body	DN50...150: Grey cast iron EN-GJL-200 (HT200) DN200...600: Nodular cast iron EN-GJS-450-10 (QT450-10)
Material, inside set	Stainless steel Nodular cast iron EN-GJS-450-10 (QT450-10) Nylon coating
PN class	PN 16

Range overview butterfly valves VKF42..

SQL321B25/SQL 361B50 Δp_s [kPa]	SQL..B50 Δp_s [kPa]	SQL..B150 Δp_s [kPa]	DN	k_{vs} [m³/h]	Stock No.	Product No.
700			50	65	S55237-V100	**VKF42.50**
700			65	140	S55237-V101	**VKF42.65**
700			80	210	S55237-V102	**VKF42.80**
700			100	470	S55237-V103	**VKF42.100**
	700		125	750	S55237-V104	**VKF42.125**
		700	150	1250	S55237-V105	**VKF42.150**
		700	200	3100	S55237-V106	**VKF42.200**

SQL..B270 Δp_s [kPa]	SQL..B570 Δp_s [kPa]	SQL..B1400 Δp_s [kPa]	SQL..B2650 Δp_s [kPa]	DN	k_{vs} [m³/h]	Stock No.	Product No.
700				250	4050	S55237-V107	**VKF42.250**
	700			300	7500	S55237-V108	**VKF42.300**
	700			350	10250	S55237-V109	**VKF42.350**
		700		400	14100	S55237-V110	**VKF42.400**
		700		450	18500	S55237-V111	**VKF42.450**
			700	500	24000	S55237-V112	**VKF42.500**
			700	600	37000	S55237-V113	**VKF42.600**

Rotary valves
Butterfly valves PN6, PN10, PN16: VKF42..

Combinable actuator to VKF42..

Operating voltage	Torque	Positioning signal	Required mounting set	Data sheet	Stock No.	Product No.
AC 220 V	25 Nm	2-position (SPDT)	Direct	N4520	S55164-A100	SQL321B25
AC 220 V	50 Nm	2-position (SPDT)	Direct	N4520	S55164-A101	SQL321B50
AC 220 V	50 Nm	DC 0...10 V	Direct	N4520	S55164-A102	SQL361B50
AC 220 V	150 Nm	2-position (SPDT)	Direct	N4520	S55164-A103	SQL321B150
AC 220 V	150 Nm	DC 0...10 V	Direct	N4520	S55164-A104	SQL361B150
AC 220 V	270 Nm	2-position (SPDT)	Direct	N4520	S55164-A105	SQL321B270
AC 220 V	270 Nm	DC 0...10 V	Direct	N4520	S55164-A106	SQL361B270
AC 220 V	570 Nm	2-position (SPDT)	Direct	N4520	S55164-A107	SQL321B570
AC 220 V	570 Nm	DC 0...10 V	Direct	N4520	S55164-A108	SQL361B570
AC 220 V	1400 Nm	2-position (SPDT)	Direct	N4520	S55164-A109	SQL321B1400
AC 220 V	1400 Nm	DC 0...10 V	Direct	N4520	S55164-A110	SQL361B1400
AC 220 V	2650 Nm	2-position (SPDT)	Direct	N4520	S55164-A111	SQL321B2650
AC 220 V	2650 Nm	DC 0...10 V	Direct	N4520	S55164-A112	SQL361B2650

Butterfly valves PN6/10/16 for flanged connections, with tight shutoff

VKF46..

- With EPDM seal for mounting between 2 flanges PN6, PN10 or NP16 to ISO 7005
- For chilled water, low-temperature hot water, DHW, cold water and fresh water in closed or open circuits

VKF46.450...600 PN 16 only

Data sheet	N4136
Angular rotation	90 °
Medium temperature	-10...120 °C
Permissible operating pressure	1600 kPa
Leakage rate	Tight shutoff, EN 12266-1, leakage rate A
Material, valve body	From DN350: Nodular cast iron EN-GJS-400-15 To DN300: Grey cast iron EN-GJL-250
Material, inside set	From DN350: Nickel-plated steel To DN300: Stainless steel
Required mounting set	SQL35.., SQL85..: ASK35.1, ASK35.2 SQL36: Direct

Range overview butterfly valves VKF46..

SQL35../85.. Δp_s [kPa]	SQL36E50F04 Δp_s [kPa]	SQL36E50F05 Δp_s [kPa]	Required mounting set	DN	k_{vs} [m³/h]	Stock No.	Product No.
1600	1600		ASK35.1	40	50	BPZ:VKF46.40	**VKF46.40**
1600	1600		ASK35.1	50	85	BPZ:VKF46.50	**VKF46.50**
1600	1600		ASK35.1	65	215	BPZ:VKF46.65	**VKF46.65**
1600		1600	ASK35.2	80	420	BPZ:VKF46.80	**VKF46.80**
1600		1600	ASK35.2	100	800	BPZ:VKF46.100	**VKF46.100**
1000		1000	ASK35.2	125	1010	BPZ:VKF46.125	**VKF46.125**

SQL36E65 Δp_s [kPa]	SQL36E110 Δp_s [kPa]	SQL36E160 Δp_s [kPa]	DN	k_{vs} [m³/h]	Stock No.	Product No.
1600			150	2100	BPZ:VKF46.150	**VKF46.150**
1000			200	4000	BPZ:VKF46.200	**VKF46.200**
	1000		250	6400	BPZ:VKF46.250	**VKF46.250**
	1000		300	8500	BPZ:VKF46.300	**VKF46.300**
	600		350	11500	BPZ:VKF46.350	**VKF46.350**
	300		400	14500	BPZ:VKF46.400	**VKF46.400**
		300	450	20500	BPZ:VKF46.450	**VKF46.450**
		300	500	21000	BPZ:VKF46.500	**VKF46.500**
		300	600	29300	BPZ:VKF46.600	**VKF46.600**
		1000	350	11500	BPZ:VKF46.350TS	**VKF46.350TS**
		1000	400	14500	BPZ:VKF46.400TS	**VKF46.400TS**
		1000	450	20500	BPZ:VKF46.450TS	**VKF46.450TS**
		1000	500	21000	BPZ:VKF46.500TS	**VKF46.500TS**
		1000	600	29300	BPZ:VKF46.600TS	**VKF46.600TS**

Field of application for VKF46..

Medium	Temperature	Operating pressure	Sealing gland
Chilled water Cooling water Brine Water with anti-freeze Demineralised water (softened) Low-temperature hot water Air	-10...120 °C	16 bar	EPDM

Manual adjuster for VKF46..

Product Title	Data sheet	Stock No.	Product No.
Manual adjuster for VKF46.., DN40 to DN65	N4136	BPZ:ASK46.1	**ASK46.1**
Manual adjuster for VKF46.., DN80 to DN125	N4136	BPZ:ASK46.2	**ASK46.2**
Manual adjuster for VKF46.., DN150 to DN200	N4136	BPZ:ASK46.3	**ASK46.3**
Manual adjuster for VKF46.., DN250 to DN400	N4136	BPZ:ASK46.4	**ASK46.4**

Combinable actuator to VKF46..

Operating voltage	Torque [Nm]	Power consumption [VA]	Positioning signal	Positioning time [s]	Data sheet	Stock No.	Product No.
AC 230 V	20	6.5	3-position	125	N4505	BPZ:SQL35.00	**SQL35.00**
AC 24 V	20	6.5	3-position	125	N4505	BPZ:SQL85.00	**SQL85.00**
AC 230 V	40	25	3-position	25	N4505	BPZ:SQL36E50F04	**SQL36E50F04**
AC 230 V	40	25	3-position	25	N4505	BPZ:SQL36E50F05	**SQL36E50F05**
AC 230 V	100	166	3-position	6	N4505	BPZ:SQL36E65	**SQL36E65**
AC 230 V	400	235	3-position	12	N4505	BPZ:SQL36E110	**SQL36E110**
AC 230 V	1200	235	3-position	24	N4505	BPZ:SQL36E160	**SQL36E160**

Modulating refrigerant valves with magnetic actuator, PS45, hermetically sealed, for safety refrigerants

MVL661..-..

Hermetically sealed 2-port valves for modulating control of chillers and heat pumps.
- Expansion, hot-gas and suction throttle applications with one type of valve
- PS45, stainless steel with soldering connections
- Integrated power electronic with precise position feedback signal
- For safety refrigerants such as R22, R134a, R404A, R407C, R410A, R507, and R744 (CO2). Not suitable for inflammable refrigerants.

Data sheet	N4714
Operating voltage	AC 24 V DC 20...30 V
Power consumption	22 VA
Positioning signal	DC 0...10 V DC 2...10 V DC 0...20 mA DC 4...20 mA
Positioning time	< 1 s
Spring return function	A->AB closed
Position feedback	DC 0...10 V DC 2...10 V DC 0...20 mA DC 4...20 mA
Degree of protection	IP65
Ambient temperature, operation	-25...55 °C
Mounting position	Upright to horizontal
Permissible operating pressure	4500 kPa
Leakage rate	< 0.002 % of k_{vs} value
Medium temperature	-40...120 °C
Valve characteristic	Linear
Stroke resolution $\Delta H/H_{100}$	1:1000
Material, valve body	Steel/ CrNi steel
Material, inside set	CrNi steel/brass

The MVL661..-.. refrigerant valve is used in conjunction with PolyCool for superheat control or SAPHIR for chiller control.
MVL661..-.. replaces M2FS..LX.., M2FE..L.. and MVL661.25.
MVL661..-.. are UL listed.
ASR61: Replacement electronics in the event of defective valve electronics.

Range overview MVL661..

DN	k_{vs} [m³/h]	k_{vs} reduced [m³/h]	Δp_{max} [kPa]	Stock No.	Product No.
15	0.4	0.25	2500	BPZ:MVL661.15-0.4	**MVL661.15-0.4**
15	1	0.63	2500	BPZ:MVL661.15-1.0	**MVL661.15-1.0**
20	2.5	1.6	2500	BPZ:MVL661.20-2.5	**MVL661.20-2.5**
25	6.3	4	2500	BPZ:MVL661.25-6.3	**MVL661.25-6.3**
32	12	8	200	BPZ:MVL661.32-12	**MVL661.32-12**

k_{vs}-reduced selectable with DIP switch
MVL661.32-12 can only be used as a suction throttle valve

MVS661..N

Modulating refrigerant valves with magnetic actuator, PS53, hermetically sealed

Hermetically sealed 2-port valves for modulating control of refrigerant circuits including chillers and heat pumps.
- Expansion, hot-gas and suction throttle applications with one type of valve
- PN40, stainless steel with welding connections
- Integrated power electronic with precise position feedback signal
- For ammonia R717 and all standard refrigerants, noncorrosive gases/liquids and CO_2 (R744). It is not suited for use with inflammable refrigerants.

Data sheet	N4717
Operating voltage	AC 24 V DC 20...30 V
Power consumption	22 VA
Positioning signal	DC 0...10 V DC 2...10 V DC 0...20 mA DC 4...20 mA
Positioning time	<1 s
Spring return function	Closed
Position feedback	DC 0...10 V DC 2...10 V DC 0...20 mA DC 4...20 mA
Degree of protection	IP65
Ambient temperature, operation	-25...55 °C
Mounting position	Upright to horizontal
Permissible operating pressure	4000 kPa
Leakage rate	<0.002% of k_{vs}-value
Medium temperature	-40...120 °C
Valve characteristic	Linear
Stroke resolution $\Delta H/H_{100}$	1:1000
Material, valve body	Steel / CrNi steel
Material, inside set	CrNi steel

"An exchangeable ASR..N valve insert allows for different k_{vs}-values with the same type of DN25 valve. In the event of service, this insert can also be replaced on the plant.
MVS661..N are UL listed."

7

Range overview MVS661..N

DN	k_{vs} [m³/h]	k_{vs} reduced [m³/h]	Δp_{max} [kPa]	Stock No.	Product No.
25	0.16	0.10	2500	BPZ:MVS661.25-016N	**MVS661.25-016N**
25	0.40	0.25	2500	BPZ:MVS661.25-0.4N	**MVS661.25-0.4N**
25	1	0.63	2500	BPZ:MVS661.25-1.0N	**MVS661.25-1.0N**
25	2.5	1.6	2500	BPZ:MVS661.25-2.5N	**MVS661.25-2.5N**
25	6.3	4.0	2500	BPZ:MVS661.25-6.3N	**MVS661.25-6.3N**

k_{vs}-reduced selectable with DIP switch

2-port modulating pilot valve with magnetic actuator, PN32, AC 24 V, DC 0...10 V / 4...20 mA / 0...20 Phs to control main valves

M2FP03GX

Hermetically sealed 2-port valve as a control valve for main valves from 2" to 5".
- PN32 with threaded connections
- For use with refrigerants such as R22, R134a, R404A, R407C, R507 and ammonia R717
- ZM electronics must be ordered separately (see below)

Data sheet	N4731
Operating voltage	AC 24 V
Positioning time	<1 s
Positioning signal	DC 0...10 V DC 4...20 mA DC 0...20 V Phs
Power consumption	13 VA
Spring return function	Closed
Ambient temperature, operation	-40...50 °C
Mounting position	Any
k_{vs}	0.3 m³/h
Permissible operating pressure	3200 kPa
Δp_{max}	1800 kPa
Leakage rate	< 0.25 % of k_{vs} value
Medium temperature	-40...100 °C
Valve characteristic	Linear
Stroke resolution $\Delta H/H_{100}$	1:200
Material, valve body	Steel
Material, inside set	CrNi steel

Stock No.	Product No.
BPZ:M2FP03GX	**M2FP03GX**

7

Matching ZM.. electronics

Operating voltage	Positioning signal	Operating range	Degree of protection	Stock No.	Product No.
AC 24 V	DC 0...10 V DC 0...20 V Phs	DC 5...7.5 V DC 10...15 V Phs	IP54	BPZ:ZM101/A	**ZM101/A**
AC 24 V	DC 4...20 mA DC 0...20 V Phs	DC 12...16 mA DC 10...15 V Phs	IP54	BPZ:ZM121/A	**ZM121/A**
	DC 0...20 V Phs	DC 10...15 V Phs	IP54	BPZ:ZM111	**ZM111**

With types ZM101/A and ZM121/A, the DC 0...20 V Phs positioning signal is also possible without operating voltage.

Refrigerant valves
For refrigeration units and heat recovery: M3FB..LX..

M3FB..LX..

Modulating refrigerant valves with magnetic actuator, PS43, soldered connection, hermetically sealed

Hermetically sealed contol valves for modulating capacity control of refrigeration units and for heat recovery.
- PN40 with soldered CrNi steel connections
- For organic safety refrigerants such as R22, R134a, R404A, R407C, R410A, R507, etc. Not suitable for flammable refrigerants
- ZM electronics must be ordered separately (see accessories)

Data sheet	N4721
Operating voltage	AC 24 V
Positioning time	< 1 s
Positioning signal	DC 0...10 V DC 4...20 mA DC 0...20 V Phs
Spring return function	AB-> A closed
Ambient temperature, operation	-40...50 °C
Mounting position	Any
Permissible operating pressure	4300 kPa
Leakage rate	< 0.05% of k_{vs}-value
Leakage rate bypass	< 0.5% of k_{vs}-value
Medium temperature	-40...120 °C
Valve characteristic	Linear
Stroke resolution $\Delta H/H_{100}$	1:200
Material, valve body	Steel
Material, inside set	CrNi steel/brass
Degree of protection	IP54

7

Range overview M3FB..LX..

DN	k_{vs} [m³/h]	Δp_{max} [kPa]	Power consumption [VA]	Stock No.	Product No.
15	0.6	2200	26	BPZ:M3FB15LX06/A	**M3FB15LX06/A**
15	1.5	2200	26	BPZ:M3FB15LX15/A	**M3FB15LX15/A**
15	3	2200	26	BPZ:M3FB15LX/A	**M3FB15LX/A**
20	5	1800	26	BPZ:M3FB20LX/A	**M3FB20LX/A**
25	8	1200	40	BPZ:M3FB25LX/A	**M3FB25LX/A**
32	12	800	40	BPZ:M3FB32LX	**M3FB32LX**

Δp_{max} across control port AB -> A

Matching ZM.. electronics

Operating voltage	Positioning signal	Operating range	Degree of protection	Stock No.	Product No.
AC 24 V	DC 0...10 V DC 0...20 V Phs	DC 5...7.5 V DC 10...15 V Phs	IP54	BPZ:ZM101/A	**ZM101/A**
AC 24 V	DC 4...20 mA DC 0...20 V Phs	DC 12...16 mA DC 10...15 V Phs	IP54	BPZ:ZM121/A	**ZM121/A**
	DC 0...20 V Phs	DC 10...15 V Phs	IP54	BPZ:ZM111	**ZM111**

With types ZM101/A and ZM121/A, the DC 0...20 V Phs positioning signal is also possible without operating voltage.

Modulating refrigerant valves with magnetic actuator, PN32, flanged, hermetically sealed

M3FK..LX..

Hermetically sealed mixing or straight-through valves for modulating capacity control of condensers.
- PN32 with copper soldering connection
- For safety refrigerants such as R22, R134a, R404A, R407C, R507, etc.
- ZM electronics must be ordered separately (see below)

Data sheet	N4722
Operating voltage	AC 24 V
Positioning time	< 1 s
Positioning signal	DC 0...10 V DC 4...20 mA DC 0...20 V Phs
Spring return function	1-> 3 closed
Ambient temperature, operation	-40...50 °C
Mounting position	Any
Permissible operating pressure	3200 kPa
Δp_{max} gas	800 kPa
Δp_{max} liquid	200 kPa
Leakage rate	< 0.05% of k_{vs}-value
Leakage rate bypass	< 0.5% of k_{vs}-value
PN class	PN 32
Medium temperature	-40...120 °C
Valve characteristic	Linear
Stroke resolution $\Delta H/H_{100}$	1:200
Material, valve body	Steel
Material, inside set	CrNi steel/brass

Range overview M3FK..LX..

DN	k_{vs} [m³/h]	Power consumption [VA]	Stock No.	Product No.
15	0.6	13	BPZ:M3FK15LX06	**M3FK15LX06**
15	1.5	13	BPZ:M3FK15LX15	**M3FK15LX15**
15	3	13	BPZ:M3FK15LX	**M3FK15LX**
20	5	16	BPZ:M3FK20LX	**M3FK20LX**
25	8	16	BPZ:M3FK25LX	**M3FK25LX**
32	12	20	BPZ:M3FK32LX	**M3FK32LX**
40	20	40	BPZ:M3FK40LX	**M3FK40LX**
50	30	40	BPZ:M3FK50LX	**M3FK50LX**

Matching ZM.. electronics

Operating voltage	Positioning signal	Operating range	Degree of protection	Stock No.	Product No.
AC 24 V	DC 0...10 V DC 0...20 V Phs	DC 5...7.5 V DC 10...15 V Phs	IP54	BPZ:ZM101/A	**ZM101/A**
AC 24 V	DC 4...20 mA DC 0...20 V Phs	DC 12...16 mA DC 10...15 V Phs	IP54	BPZ:ZM121/A	**ZM121/A**
	DC 0...20 V Phs	DC 10...15 V Phs	IP54	BPZ:ZM111	**ZM111**

With types ZM101/A and ZM121/A, the DC 0...20 V Phs positioning signal is also possible without operating voltage.

Damper actuators

Overview and selection tools	Overview of product details	8-2
Actuators for HVAC applications	Rotary damper actuators with spring-return 2 Nm: GQD..A	8-7
	Rotary damper actuators with spring-return 7 Nm: GMA..1E	8-9
	Rotary damper actuators with spring-return 18 Nm: GCA..1E	8-10
	Accessories for rotary damper actuators	8-11
	Rotary damper actuators without spring-return 2 Nm: GSD..1A	8-12
	Rotary damper actuators without spring-return 5 Nm: GDB..1E	8-13
	Rotary damper actuators without spring-return 10 Nm: GLB..1E	8-14
	Rotary damper actuators without spring-return 15 Nm: GEB..1E	8-15
	Rotary damper actuators without spring-return 25 Nm: GBB..1E	8-16
	Rotary damper actuators without spring-return 35 Nm: GIB..1E	8-17
	Accessories for rotary damper actuators	8-18
	Rotary damper actuators with safety function 6 Nm: GNP..1E	8-20
	Rotary damper actuators without safety function 6 Nm: GAP..1E	8-21
	Linear damper actuators without spring-return 125 N: GDB..2E	8-22
	Linear damper actuators without spring-return 250 N: GLB..2E	8-23
	Linear damper actuators without spring-return 400 N: GEB..2E	8-24
	Linear damper actuators without spring-return 550 N: GBB..2E	8-25
	Linear damper actuators without spring-return 150 N: GHD	8-26
	Accessories for linear damper actuators	8-27
Actuators for air volume control	VAV compact controllers with KNX/PL-Link communication	8-28
	VAV compact controllers	8-29
	VAV modular controllers	8-30
Actuators for fire and smoke protection dampers	Actuators for fire and smoke protection dampers 7 Nm: GNA..1E	8-31
	Actuators for fire and smoke protection dampers 18 Nm: GGA..1E	8-33
	Actuators for fire and smoke protection dampers 6 Nm: GND..	8-35
	Actuators for fire and smoke protection dampers 16 Nm: GGD..	8-39

Damper actuators without spring return (SR)

Actuators for HVAC applications	Control signal	Operating voltage	Standard model	Feedback potenti-ometer (1 kOhm)	Adjustable start/span	Adjustable start/span with 2 auxil-iary switches	Feedback (1 kOhm) with 2 auxiliary switches	2 auxiliary switches	Dimen-sions, round damper shaft (mm)	Dimen-sions, square damper shaft (mm)
GSD series 2 Nm for approx. 0.3 m² damper area 30 s running time	2-position On/Off (1-wire SPST)	AC/DC 24 V AC 230 V	GSD121.1A GSD321.1A	–	–	–	–	GSD126.1A GSD326.1A	8...15	6...11
GDB series 5 Nm for approx. 0.8 m² damper area 150 s running time	3-position	AC 24 V AC 230 V	GDB131.1E GDB331.1E	GDB132.1E GDB332.1E	–	–	–	GDB136.1E GDB336.1E	8...16	6...12,8
	Modulating DC 0...10 V	AC 24 V	GDB161.1E	–	GDB163.1E	GDB164.1E	–	GDB166.1E		
GLB series 10 Nm for approx. 1.5 m² damper area 150 s running time	3-position	AC 24 V AC 230 V	GLB131.1E GLB331.1E	GLB132.1E GLB332.1E	–	–	–	GLB136.1E GLB336.1E	8...16	6...12,8
	Modulating DC 0...10 V	AC 24 V	GLB161.1E	–	GLB163.1E	GLB164.1E	–	GLB166.1E		
GAP series 6 Nm for approx. 1 m² damper area 2 s running time	2-position	AC/DC 24 V	GAP191.1E	–	–	–	–	GAP196.1E	6,4...20,5	6,4...13
	3-position	AC/DC 24 V	GAP191.1E	–	–	–	–	GAP196.1E		
	Modulating DC 0/2...10 V 0/4...20 mA	AC/DC 24 V	GAP191.1E	–	–	–	–	GAP196.1E		
GEB series 15 Nm for approx. 3 m² damper area 150 s running time	3-position	AC 24 V AC 230 V	GEB131.1E GEB331.1E	GEB132.1E GEB332.1E	–	–	–	GEB136.1E GEB336.1E	6,4...20,5	6,4...13
	Modulating DC 0...10 V	AC 24 V	GEB161.1E	–	GEB163.1E	GEB164.1E	–	GEB166.1E		
GBB series 25 Nm for approx. 4 m² damper area 150 s running time	3-position	AC 24 V AC 230 V	GBB131.1E GBB331.1E	–	–	–	GBB135.1E GBB335.1E	GBB136.1E GBB336.1E	8...25,6	6...18
	Modulating DC 0...10 V	AC 24 V	GBB161.1E	–	GBB163.1E	GBB164.1E	–	GBB166.1E		
GIB series 35 Nm for approx. 6 m² damper area 150 s running time	3-position	AC 24 V AC 230 V	GIB131.1E GIB331.1E	–	–	–	GIB135.1E GIB335.1E	GIB136.1E GIB336.1E	8...25,6	6...18
	Modulating DC 0...10 V	AC 24 V	GIB161.1E	–	GIB163.1E	GIB164.1E	–	GIB166.1E		
GDB series 125 N for approx. 0.8 m² damper area 150 s running time	3-position	AC 24 V AC 230 V	GDB131.2E GDB331.2E	GDB132.2E GDB332.2E	–	–	–	GDB136.2E GDB336.2E	–	–
	Modulating DC 0...10 V	AC 24 V	GDB161.2E	–	GDB163.2E	GDB164.2E	–	GDB166.2E		
GLB series 250 N for approx. 1.5 m² damper area 150 s running time	3-position	AC 24 V AC 230 V	GLB131.2E GLB331.2E	GLB132.2E GLB332.2E	–	–	–	GLB136.2E GLB336.2E	–	–
	Modulating DC 0...10 V	AC 24 V	GLB161.2E	–	GLB163.2E	GLB164.2E	–	GLB166.2E		
GEB series 400 N for approx. 3 m² damper area 150 s running time	3-position	AC 24 V AC 230 V	GEB131.2E GEB331.2E	GEB132.2E GEB332.2E	–	–	–	GEB136.2E GEB336.2E	–	–
	Modulating DC 0...10 V	AC 24 V	GEB161.2E	–	GEB163.2E	GEB164.2E	–	GEB166.2E		
GBB series 550 N for approx. 4 m² damper area 150 s running time	3-position	AC 24 V AC 230 V	GBB131.2E GBB331.2E	–	–	–	GBB135.2E GBB335.2E	GBB136.2E GBB336.2E	–	–
	Modulating DC 0...10 V	AC 24 V	GBB161.2E	–	GBB163.2E	GBB164.2E	–	GBB166.2E		

8

Damper actuators with spring return (SR)

Actuators for HVAC applications	Control signal	Operating voltage	Standard model	Feedback potenti-ometer (1 kOhm)	Adjustable start/span	Adjustable start/span with 2 auxil-iary switches	Feedback (1 kOhm) with 2 auxiliary switches	2 auxiliary switches	Dimen-sions, round damper shaft (mm)	Dimen-sions, square damper shaft (mm)
GQD series 2 Nm for approx. 0.3 m² damper area 30 s running time 15 s SR time	2-position	AC/DC 24 V AC 230 V	GQD121.1A GQD321.1A	–	–	–	–	GQD126.1A GQD326.1A	8...15	6...11
	3-position	AC/DC 24 V	GQD131.1A	–	–	–	–	GQD136.1A		
	Modulating DC 0...10 V	AC/DC 24 V	GQD161.1A	–	–	–	–	GQD166.1A		
GNP series 6 Nm for approx. 1 m² damper area 2 s running time el. fail-safe function	2-position	AC/DC 24 V	GNP191.1E	–	–	–	–	GNP196.1E	6,4...20,5	6,4...13
	3-position	AC/DC 24 V	GNP191.1E	–	–	–	–	GNP196.1E		
	Modulating DC 0/2...10 V 0/4...20 mA	AC/DC 24 V	GNP191.1E	–	–	–	–	GNP196.1E		
GMA series 7 Nm for approx. 1.5 m² damper area 90 s running time 15 s SR time	2-position	AC/DC 24 V AC 230 V	GMA121.1E GMA321.1E	–	–	–	–	GMA126.1E GMA326.1E	6,4...20,5	6,4...13
	3-position	AC/DC 24 V	GMA131.1E	GMA132.1E	–	–	–	GMA136.1E		
	Modulating DC 0...10 V	AC/DC 24 V	GMA161.1E	–	GMA163.1E	GMA164.1E	–	GMA166.1E		
GCA series 18 Nm for approx. 3 m² damper area 90 s running time 15 s SR time	2-position	AC/DC 24 V AC 230 V	GCA121.1E GCA321.1E	–	–	–	–	GCA126.1E GCA326.1E	8...25,6	6...18
	3-position	AC/DC 24 V	GCA131.1E	–	–	–	GCA135.1E	–		
	Modulating DC 0...10 V	AC/DC 24 V	GCA161.1E	–	GCA163.1E	GCA164.1E	–	GCA166.1E		

Actuators for fire and smoke protection dampers

Actuators for fire and smoke protection dampers	Control signal	Operating voltage	2 auxiliary swit-ches	2 auxiliary switches and thermal cut-out	Dimensions, square damper shaft (mm)
GGA actuator [1] 18 Nm for approx. 2.5 m² damper area 90 s running time 15 s spring return time	2-position	AC/DC 24 V AC 230 V	GGA126.1E/..[2] GGA326.1E/..[2]	GGA126.1E/T..[2] GGA326.1E/T..[2]	8, 10, 12, 15
GNA actuator [1] 7 Nm for approx. 1 m² damper area 90 s running time 15 s spring return time	2-position	AC/DC 24 V AC 230 V	GNA126.1E/..[2] GNA326.1E/..[2]	GNA126.1E/T..[2] GNA326.1E/T..[2]	8, 10, 12, 15

[1] Available to OEMs only [2] .. = insert dimension of damper shaft square (mm)

Actuators for air volume controllers

Actuators for air volume controllers 300 Pa application range	Control signal	Operating voltage	Standard model	Dimensions, round damper shaft (mm)	Dimensions, square damper shaft (mm)
GDB 300 Pa VAV compact controller [1] 5 Nm for approx. 0.8 m² damper area 150 s running time	3-position	AC 24 V	GDB181.1E/3	8...16	6...12,8
	Modulating DC 0/2...10 V	AC 24 V			
	KNX/PL-Link	AC 24 V	GDB181.1E/KN		
GLB 300 Pa VAV compact controller [1] 10 Nm for approx. 1.5 m² damper area 150 s running time	3-position	AC 24 V	GLB181.1E/3	8...16	6...12,8
	Modulating DC 0/2...10 V	AC 24 V			
	KNX/PL-Link	AC 24 V	GLB181.1E/KN		
ASV 300 Pa VAV modular controller [1]	3-position	AC 24 V	ASV181.1E/3	–	–
	Modulating DC 0/2...10 V	AC 24 V			

[1] Available to OEMs only

Accessories for actuators

Description		GDB/ GLB	GEB/ GMA	GCA/GIB GBB	Type reference
	Rotary to linear set with lever Allows a direct-coupled actuator to provide a linear drive; can be used to simultaneously drive a set of opposing or adjacent dampers with a single actuator.	■			ASK71.5
	Rotary to linear set with lever Allows a direct-coupled actuator to provide an auxiliary linear drive; can be used to simultaneously drive a set of opposing or adjacent dampers with a single actuator.		■	■	ASK71.13 ASK71.3
	Rotary to linear set with lever and angle bracket For use in applications where the actuator can be rigidly surface-mounted and a linear stroke output is required.	■			ASK71.6
	Rotary to linear set with lever and mounting plate For use in applications where the actuator can be rigidly surface-mounted and a linear stroke output is required.		■	■	ASK71.14 ASK71.4
	Universal lever For use with all OpenAir rotary to linear kits for linear applications requiring connection to damper louver shaft when joint connection is not possible. For 8 to 25.6 mm round.	■	■	■	**ASK71.9**
	Tandem mounting bracket **Tandem mounting bracket for 2-position and 3-position GCA/GIB models** **Tandem mounting bracket for modulating GCA/GIB models**		■	 ■ ■	**ASK73.3** **ASK73.1** **ASK73.2**
	Rotary to linear set for duct mounting For airstream applications and where a foot-mounted actuator can be used. Includes crank arm, Teflon support-bearing ring, and mounting fasteners. **Rotary to linear set for duct and frame mounting**	■	 ■	■	ASK71.6 ASK71.1 ASK71.11

8

Description		GDB/ GLB	GEB/ GMA	GCA/GIB GBB	Type reference
	Rotary to linear set for frame mounting For direct mounting to damper frame. Includes a crank arm to generate a linear stroke, a Teflon support-bearing ring to minimize side-loading on the actuator's output bearing, and other mounting fasteners.			■	ASK71.2
	Rotary to linear set for duct and frame mounting		■		ASK71.11
	Special shaft adapter • Up to 27 mm shaft diameter Note: When used with a GIB, accepts shaft diameters from 19 to 27 mm			■	ASK74.1
	Actuator shaft insert for small shaft diameters • Up to 10 mm diameter	■			ASK78.3
	Weathershield Includes cover, gasket and screws. • IP65 • UV-resistant	 ■	■ ■	 ■ ■ ■	ASK75.3 ASK75.1 ASK75.4 ASK75.6 ASK75.5 ASK75.2
	Shaft extension		■	■	ASK74.7
	Setting unit for VAV compact controller for GDB/GLB/ASV181.1E/3	■			AST10
	Interface converter for VAV compact controller PPS2 to RS232 interface converter for use with GDB/GLB/ASV181.1E/3	■			AST11

OpenAir accessories

Description		GDB/ GLB	GEB/ GMA	GCA/GIB GBB	Type reference
	External auxiliary switches External auxiliary switch kit, attachable to GCA, GMA, GEB, GBB und GIB rotary actuators - 1 external auxiliary switch - 2 external auxiliary switches		■ ■	■ ■	 ASC77.1E ASC77.2E
	Shaft inserts for GDB/GLB...1 - Round 1/2" - Square 8 x 8 mm - Square 8 x 8 mm fix - Square 10 x 10 mm - Round 10 mm - Round 12 mm - D-profile fix	 ■ ■ ■ ■ ■ ■ ■			 ASK78.5 ASK78.6 ASK78.14 ASK78.7 ASK78.9 ASK78.10 ASK78.12

For acccessories and spare parts for air damper actuators, please order data sheet:

N4697 (GMA/GEB)
N4698 (GDB/GLB)
N4699 (GCA/GBB/GIB)

8

Rotary air damper actuators 2 Nm with spring return

GQD..1A

- For shaft dia 8...15 mm, square 6...11 mm, min. shaft length 20 mm
- With housing made of plastic and 0.9 m connecting cable

Data sheet	N4604
Torque	2 Nm
Air damper area	0.3 m²
Angular rotation	90 °
Positioning time	Open with motor: 30 s Closing with spring: 15 s
Degree of protection	IP40
Dimensions (W x H x D)	73 x 122 x 63 mm

Range overview GQD..1A

Operating voltage [V]	Positioning signal	Power consumption	Auxiliary switch	Stock No.	Product No.
AC 24 DC 24	2-position	6.5 VA 4.5 W	0	BPZ:GQD121.1A	**GQD121.1A**
AC 24 DC 24	2-position	6.5 VA 4.5 W	2	BPZ:GQD126.1A	**GQD126.1A**
AC 230	2-position	10 VA 4.5 W	0	BPZ:GQD321.1A	**GQD321.1A**
AC 230	2-position	10 VA 4.5 W	2	BPZ:GQD326.1A	**GQD326.1A**
AC 24 DC 24	3-position	4 VA 2.5 W	0	BPZ:GQD131.1A	**GQD131.1A**
AC 24 DC 24	3-position	4 VA 2.5 W	2	BPZ:GQD136.1A	**GQD136.1A**
AC 24 DC 24	DC 0...10 V	4.5 VA 3 W	0	BPZ:GQD161.1A	**GQD161.1A**
AC 24 DC 24	DC 0...10 V	4.5 VA 3 W	2	BPZ:GQD166.1A	**GQD166.1A**

8

Rotary air damper actuators 2 Nm, with spring return

GQD..6A

- Operate direct driven dampers used to control air flow in duct specifically to adress two position domestic and light commercial barrel damper application.
- For shaft dia 8
- Air damper area approx. 0.3 m2
- With housing made of plastic and 0.9 m connecting cable

Data sheet	N4606
Torque	2 Nm
Air damper area	0.3 m²
Positioning time	Open with motor: 30 s Closing with spring: 15 s
Degree of protection	IP40
Dimensions (W x H x D)	70 x 121.4 x 62.5 mm

Range overview GQD..6A

Operating voltage [V]	Positioning signal	Stock No.	Product No.
AC 24 DC 24	2-position	BPZ:GQD121.6A	**GQD121.6A**
AC 230	2-position	BPZ:GQD321.6A	**GQD321.6A**

Rotary air damper actuators 7 Nm, with spring return

GMA..1E

- With self-centering shaft adapter for shaft dia. 6.4...20.5 mm, square 6.4...13 mm, min. shaft length 20 mm
- With position indication and adjustable mechanical limit stop
- Manual override
- With housing made of die-cast aluminium and 0.9 m connecting cable

Data sheet	N4614
Torque	7 Nm
Air damper area	1.5 m²
Angular rotation	90 °
Positioning time	Opening with motor: 90 s Closing with spring: 15 s
Degree of protection	IP54
Dimensions (W x H x D)	81 x 192 x 63 mm

Range overview GMA...1E

Operating voltage [V]	Positioning signal	Power consumption	Auxiliary switch	Stock No.	Product No.
AC 24 DC 24	2-position	5 VA 3.5 W	0	BPZ:GMA121.1E	**GMA121.1E**
AC 24 DC 24	2-position	5 VA 3.5 W	2	BPZ:GMA126.1E	**GMA126.1E**
AC 230	2-position	7.5 VA	0	BPZ:GMA321.1E	**GMA321.1E**
AC 230	2-position	7,5 VA	2	BPZ:GMA326.1E	**GMA326.1E**
AC 24 DC 24	3-position	5 VA 3.5 W	0	BPZ:GMA131.1E	**GMA131.1E**
AC 24 DC 24	3-position	5 VA 3.5 W	0	BPZ:GMA132.1E	**GMA132.1E**
AC 24 DC 24	3-position	5 VA 3.5 W	2	BPZ:GMA136.1E	**GMA136.1E**
AC 24 DC 24	DC 0...10 V	5 VA 3.5 W	0	BPZ:GMA161.1E	**GMA161.1E**
AC 24 DC 24	DC 0...35 V Adjustable	5 VA 3.5 W	0	BPZ:GMA163.1E	**GMA163.1E**
AC 24 DC 24	DC 0...35 V Adjustable	5 VA 3.5 W	2	BPZ:GMA164.1E	**GMA164.1E**
AC 24 DC 24	DC 0...10 V	5 VA 3.5 W	2	BPZ:GMA166.1E	**GMA166.1E**

Type GMA132.1E also has a feedback potentiometer.

Basic Documentation No.: Z4614

Actuators for HVAC applications
Rotary damper actuators with spring-return 18 Nm: GCA..1E

GCA..1E

Rotary air damper actuators 18 Nm, with spring return

- With self-centering shaft adapter for shaft dia. 8..25.6 mm, square 6...18 mm, min. shaft length 20 mm
- With position indication and adjustable mechanical limit stop
- Manual override
- With housing made of die-cast aluminium and 0.9 m connecting cable

Data sheet	N4613
Torque	18 Nm
Air damper area	3 m²
Angular rotation	90 °
Positioning time	Opening with motor: 90 s Closing with spring: 15 s
Degree of protection	IP54
Dimensions (W x H x D)	100 x 300 x 75 mm

Range overview GCA...1E

Operating voltage [V]	Positioning signal	Power consumption	Auxiliary switch	Stock No.	Product No.
AC 24 DC 24	2-position	7 VA / 5 W	0	BPZ:GCA121.1E	**GCA121.1E**
AC 24 DC 24	2-position	7 VA / 5 W	2	BPZ:GCA126.1E	**GCA126.1E**
AC 230	2-position	8 VA / 6 W	0	BPZ:GCA321.1E	**GCA321.1E**
AC 230	2-position	8 VA / 6 W	2	BPZ:GCA326.1E	**GCA326.1E**
AC 24 DC 24	3-position	7 VA / 5 W	0	BPZ:GCA131.1E	**GCA131.1E**
AC 24 DC 24	3-position	7 VA / 5 W	2	BPZ:GCA135.1E	**GCA135.1E**
AC 24 DC 24	DC 0...10 V	7 VA / 5 W	0	BPZ:GCA161.1E	**GCA161.1E**
AC 24 DC 24	DC 0...35 V Adjustable	7 VA / 5 W	0	BPZ:GCA163.1E	**GCA163.1E**
AC 24 DC 24	DC 0...35 V Adjustable	7 VA / 5 W	2	BPZ:GCA164.1E	**GCA164.1E**
AC 24 DC 24	DC 0...10 V	7 VA / 5 W	2	BPZ:GCA166.1E	**GCA166.1E**

Type GCA135.1E also has a feedback potentiometer.

Basic Documentation No.: Z4613

Accessories for rotary air damper actuators GMA..1E

Product Title	Data sheet	Stock No.	Product No.
Universal lever	N4697	BPZ:ASK71.9	**ASK71.9**
Rotary/linear mounting kit for duct or frame mounting	N4697	BPZ:ASK71.11	**ASK71.11**
Rotary/linear mounting kit with lever and bracket	N4697	BPZ:ASK71.13	**ASK71.13**
Rotary/linear mounting kit with lever	N4697	BPZ:ASK71.14	**ASK71.14**
Bracket for power pack	N4697	BPZ:ASK73.3	**ASK73.3**
Shaft extension	N4699	BPZ:ASK74.7	**ASK74.7**
Weather shield	N4697	BPZ:ASK75.3	**ASK75.3**
Weather shield for rotary-/linear-type actuator GMA/GEB...E	N4697	BPZ:ASK75.6	**ASK75.6**
External auxiliary switch assembly 1 switch	N4615	BPZ:ASC77.1E	**ASC77.1E**
External auxiliary switch assembly 2 switches	N4615	BPZ:ASC77.2E	**ASC77.2E**

Accessories for rotary air damper actuators GCA...1E

Product Title	Data sheet	Stock No.	Product No.
Rotary/linear mounting kit for duct mounting	N4699	BPZ:ASK71.1	**ASK71.1**
Rotary/linear mounting kit for frame mounting	N4699	BPZ:ASK71.2	**ASK71.2**
Rotary/linear mounting kit with lever	N4699	BPZ:ASK71.3	**ASK71.3**
Rotary/linear mounting kit with lever and bracket	N4699	BPZ:ASK71.4	**ASK71.4**
Universal lever	N4697	BPZ:ASK71.9	**ASK71.9**
Bracket for power pack	N4699	BPZ:ASK73.1	**ASK73.1**
Flexible bracket for power pack	N4699	BPZ:ASK73.2	**ASK73.2**
Special shaft adapter	N4699	BPZ:ASK74.1	**ASK74.1**
Shaft extension	N4699	BPZ:ASK74.7	**ASK74.7**
Weather shield for rotary actuator	N4699	BPZ:ASK75.1	**ASK75.1**
Weather shield for rotarytype actuator GBB/GCA/GIB...1E	N4699	BPZ:ASK75.4	**ASK75.4**
External auxiliary switch assembly 1 switch	N4615	BPZ:ASC77.1E	**ASC77.1E**
External auxiliary switch assembly 2 switches	N4615	BPZ:ASC77.2E	**ASC77.2E**

Caution!
- ASK73.1 is only valid for GCA12...1E, GCA13...1E, GCA32...1E, GIB13...1E, GIB33...1E
- ASK73.2 is only valid for GCA16...1E and GIB16...1E

Actuators for HVAC applications
Rotary damper actuators without spring-return 2 Nm: GSD..1A

GXD..

Rotary damper actuators, 1.5 Nm, without spring return

In ventilating and air conditioning plants to actuate air dampers
- operate direct driven zone dampers used to control air flow in ducts
- specifically to address two position domestic and light commercial barrel damper applications

Data sheet

Torque	1.5 Nm
Air damper area	0.3 m²
Degree of protection	IP40
Dimensions (W x H x D)	100 x 65 x 70 mm

GSD..1A

Rotary air damper actuators 2 Nm without spring return

- Operate direct driven zone dampers used to control air flow in ducts specifically to address two position domestic and light commercial barrel damper applications.
- For shaft dia 8...15 mm, square 6...11 mm, min. shaft length 20 mm
- With housing made of plastic and 0.9 m connecting cable

Data sheet	N4603
Torque	2 Nm
Air damper area	0.3 m²
Angular rotation	90 °
Positioning time	30 s
Degree of protection	IP40
Dimensions (W x H x D)	73 x 122 x 63 mm

Range overview GSD..1A

Operating voltage [V]	Positioning signal	Power consumption	Auxiliary switch	Stock No.	Product No.
AC 24 DC 24	SPST	2 VA 1.5 W	0	BPZ:GSD121.1A	**GSD121.1A**
AC 24 DC 24	SPST	2 VA 1.5 W	2	BPZ:GSD126.1A	**GSD126.1A**
AC 230	SPST	12 VA 2 W	0	BPZ:GSD321.1A	**GSD321.1A**
AC 230	SPST	12 VA 2 W	2	BPZ:GSD326.1A	**GSD326.1A**

Rotary air damper actuators 5 Nm, without spring return

GDB..1E

- For shaft dia. 8..16 mm, square 6...12 mm, min. shaft length 30 mm
- With position indication and adjustable mechanical limit stop
- Button for disengaging the gear train to enable manual override
- With base made of steel, plastic housing and 0.9 m connecting cable

Data sheet	N4634
Torque	5 Nm
Air damper area	0.8 m²
Angular rotation	90 °
Positioning time	150 s
Degree of protection	IP54
Dimensions (W x H x D)	68 x 137 x 59.5 mm

Range overview GDB...1E

Operating voltage [V]	Positioning signal	Power consumption	Auxiliary switch	Stock No.	Product No.
AC 24	3-position	2 VA	0	BPZ:GDB131.1E	**GDB131.1E**
AC 24	3-position	2 VA	0	BPZ:GDB132.1E	**GDB132.1E**
AC 24	3-position	2 VA	2	BPZ:GDB136.1E	**GDB136.1E**
AC 230	3-position	2 VA	0	BPZ:GDB331.1E	**GDB331.1E**
AC 230	3-position	2 VA	0	BPZ:GDB332.1E	**GDB332.1E**
AC 230	3-position	2 VA	2	BPZ:GDB336.1E	**GDB336.1E**
AC 24	DC 0...10 V	3 VA	0	BPZ:GDB161.1E	**GDB161.1E**
AC 24	DC 0...35 V Adjustable	3 VA	0	BPZ:GDB163.1E	**GDB163.1E**
AC 24	DC 0...35 V Adjustable	3 VA	2	BPZ:GDB164.1E	**GDB164.1E**
AC 24	DC 0...10 V	3 VA	2	BPZ:GDB166.1E	**GDB166.1E**

Types GDB132.1E and 332.1E have a feedback potentiometer.

Basic Documentation No.: Z4634

Actuators for HVAC applications
Rotary damper actuators without spring-return 10 Nm: GLB..1E

GLB..1E

Rotary air damper actuators 10 Nm, without spring return

- For shaft dia. 8..16 mm, square 6...12 mm, min. shaft length 30 mm
- With position indication and adjustable mechanical limit stop
- Button for disengaging the gear train to enable manual override
- With base made of steel, plastic housing and 0.9 m connecting cable

Data sheet	N4634
Torque	10 Nm
Air damper area	1.5 m²
Angular rotation	90 °
Positioning time	150 s
Degree of protection	IP54
Dimensions (W x H x D)	68 x 137 x 59.5 mm

Range overview GLB...1E

Operating voltage [V]	Positioning signal	Power consumption	Auxiliary switch	Stock No.	Product No.
AC 24	3-position	2 VA 1 W	0	BPZ:GLB131.1E	**GLB131.1E**
AC 24	3-position	2 VA	0	BPZ:GLB132.1E	**GLB132.1E**
AC 24	3-position	2 VA	2	BPZ:GLB136.1E	**GLB136.1E**
AC 230	3-position	2 VA 1 W	0	BPZ:GLB331.1E	**GLB331.1E**
AC 230	3-position	2 VA	0	BPZ:GLB332.1E	**GLB332.1E**
AC 230	3-position	2 VA	2	BPZ:GLB336.1E	**GLB336.1E**
AC 24	DC 0...10 V	3 VA 2 W	0	BPZ:GLB161.1E	**GLB161.1E**
AC 24	DC 0...35 V Adjustable	3 VA	0	BPZ:GLB163.1E	**GLB163.1E**
AC 24	DC 0...35 V Adjustable	3 VA	2	BPZ:GLB164.1E	**GLB164.1E**
AC 24	DC 0...10 V	3 VA	2	BPZ:GLB166.1E	**GLB166.1E**

Types GLB132.1E and 332.1E have a feedback potentiometer.

Basic Documentation No.: Z4634

Rotary air damper actuators 15 Nm, without spring return

GEB..1E

- With self-centering shaft adapter for shaft dia. 6.4...20.5 mm, square 6.4...13 mm, min. shaft length 20 mm
- With position indication and adjustable mechanical limit stop
- Button for disengaging the gear train to enable manual control
- With housing made of die-cast aluminium and 0.9 m connecting cable

Data sheet	N4621
Torque	15 Nm
Air damper area	3 m²
Angular rotation	90 °
Positioning time	150 s
Degree of protection	IP54
Dimensions (W x H x D)	81 x 192 x 60 mm

Range overview GEB...1E

Operating voltage [V]	Positioning signal	Power consumption	Auxiliary switch	Stock No.	Product No.
AC 24	3-position	4 VA / 3.5 W	0	BPZ:GEB131.1E	**GEB131.1E**
AC 24	3-position	4 VA / 3.5 W	0	BPZ:GEB132.1E	**GEB132.1E**
AC 24	3-position	4 VA / 3.5 W	2	BPZ:GEB136.1E	**GEB136.1E**
AC 230	3-position	3 VA / 3 W	0	BPZ:GEB331.1E	**GEB331.1E**
AC 230	3-position	3 VA / 3 W	0	BPZ:GEB332.1E	**GEB332.1E**
AC 230	3-position	3 VA / 3 W	2	BPZ:GEB336.1E	**GEB336.1E**
AC 24	DC 0...10 V DC 2...10 V	6 VA / 5.5 W	0	BPZ:GEB161.1E	**GEB161.1E**
AC 24	DC 0...35 V Adjustable	6 VA / 5.5 W	0	BPZ:GEB163.1E	**GEB163.1E**
AC 24	DC 0...35 V Adjustable	6 VA / 5.5 W	2	BPZ:GEB164.1E	**GEB164.1E**
AC 24	DC 0...10 V DC 2...10 V	6 VA / 5.5 W	2	BPZ:GEB166.1E	**GEB166.1E**

Types GEB132.1E and 332.1E have a feedback potentiometer.

Basic Documentation No.: Z4621

Actuators for HVAC applications
Rotary damper actuators without spring-return 25 Nm: GBB..1E

GBB..1E

Rotary air damper actuators 25 Nm, without spring return

- With self-centering shaft adapter for shaft dia. 8..25.6 mm, square 6...18 mm, min. shaft length 20 mm
- With position indication and adjustable mechanical limit stop
- Button for disengaging the gear train to enable manual control
- With housing made of die-cast aluminium and 0.9 m connecting cable

Data sheet	N4626
Torque	25 Nm
Air damper area	4 m²
Angular rotation	90 °
Positioning time	150 s
Degree of protection	IP54
Dimensions (W x H x D)	100 x 300 x 75 mm

Range overview GBB...1E

Operating voltage [V]	Positioning signal	Power consumption	Auxiliary switch	Stock No.	Product No.
AC 24	3-position	7 VA / 7 W	0	BPZ:GBB131.1E	**GBB131.1E**
AC 24	3-position	7 VA / 7 W	2	BPZ:GBB135.1E	**GBB135.1E**
AC 24	3-position	7 VA / 7 W	2	BPZ:GBB136.1E	**GBB136.1E**
AC 230	3-position	5 VA / 5 W	0	BPZ:GBB331.1E	**GBB331.1E**
AC 230	3-position	5 VA / 5 W	2	BPZ:GBB335.1E	**GBB335.1E**
AC 230	3-position	5 VA / 5 W	2	BPZ:GBB336.1E	**GBB336.1E**
AC 24	DC 0...10 V	8 VA / 8 W	0	BPZ:GBB161.1E	**GBB161.1E**
AC 24	DC 0...35 V Adjustable	8 VA / 8 W	0	BPZ:GBB163.1E	**GBB163.1E**
AC 24	DC 0...35 V Adjustable	8 VA / 8 W	2	BPZ:GBB164.1E	**GBB164.1E**
AC 24	DC 0...10 V	8 VA / 8 W	2	BPZ:GBB166.1E	**GBB166.1E**

Types GBB135.1E and GBB335.1E also have a feedback potentiometer.

Basic Documentation No.: Z4626

Rotary air damper actuators 35 Nm, without spring return

GIB..1E

- With self-centering shaft adapter for shaft dia. 8..25.6 mm, square 6...18 mm, min. shaft length 20 mm
- With position indication and adjustable mechanical limit stop
- Button for disengaging the gear train to enable manual override
- With housing made of die-cast aluminium and 0.9 m connecting cable

Data sheet	N4626
Torque	35 Nm
Air damper area	6 m²
Angular rotation	90 °
Positioning time	150 s
Degree of protection	IP54
Dimensions (W x H x D)	100 x 300 x 75 mm

Range overview GIB...1E

Operating voltage [V]	Positioning signal	Power consumption	Auxiliary switch	Stock No.	Product No.
AC 24	3-position	7 VA / 7 W	0	BPZ:GIB131.1E	**GIB131.1E**
AC 24	3-position	7 VA / 7 W	2	BPZ:GIB135.1E	**GIB135.1E**
AC 24	3-position	7 VA / 7 W	2	BPZ:GIB136.1E	**GIB136.1E**
AC 230	3-position	5 VA / 5 W	0	BPZ:GIB331.1E	**GIB331.1E**
AC 230	3-position	5 VA / 5 W	2	BPZ:GIB335.1E	**GIB335.1E**
AC 230	3-position	5 VA / 5 W	2	BPZ:GIB336.1E	**GIB336.1E**
AC 24	DC 0...10 V	8 VA / 8 W	0	BPZ:GIB161.1E	**GIB161.1E**
AC 24	DC 0...35 V Adjustable	8 VA / 8 W	0	BPZ:GIB163.1E	**GIB163.1E**
AC 24	DC 0...35 V Adjustable	8 VA / 8 W	2	BPZ:GIB164.1E	**GIB164.1E**
AC 24	DC 0...10 V	8 VA / 8 W	2	BPZ:GIB166.1E	**GIB166.1E**

Types GIB135.1E and 335.1E also have a potentiometer.

Basic Documentation No.: Z4626

Accessories for rotary air damper actuators GDB...1E and GLB..1E

Product Title	Data sheet	Stock No.	Product No.
Rotary/linear mounting kit	N4698	BPZ:ASK71.5	**ASK71.5**
Rotary/linear mounting kit with bracket	N4698	BPZ:ASK71.6	**ASK71.6**
Universal lever	N4697	BPZ:ASK71.9	**ASK71.9**
Weather shield for rotary-/linear-type actuator GDB/GLB/GSF...E	N4698	BPZ:ASK75.5	**ASK75.5**
T-lever valve BG	N4698	BPZ:ASK78.2	**ASK78.2**
Insert for small shaft dia.	N4698	BPZ:ASK78.3	**ASK78.3**
Centering insert D-profile 12.9 mm dia.	N4698	BPZ:ASK78.4	**ASK78.4**
Centering insert 12.7 mm dia. (½")	N4698	BPZ:ASK78.5	**ASK78.5**
Centering insert 8 mm square	N4698	BPZ:ASK78.6	**ASK78.6**
Centering insert 10 mm square	N4698	BPZ:ASK78.7	**ASK78.7**
Centering insert 8 mm dia.	N4698	BPZ:ASK78.8	**ASK78.8**
Centering insert 10 mm dia.	N4698	BPZ:ASK78.9	**ASK78.9**
Centering insert 12 mm dia.	N4698	BPZ:ASK78.10	**ASK78.10**
Centering insert 3/8" dia.	N4698	BPZ:ASK78.11	**ASK78.11**
Centering insert D-profile fixed 12 mm dia. × 9 mm	N4698	BPZ:ASK78.12	**ASK78.12**
Centering insert 8 mm square	N4698	BPZ:ASK78.14	**ASK78.14**

Accessories for rotary air damper actuators GMA..1E and GEB...1E

Product Title	Data sheet	Stock No.	Product No.
Universal lever	N4697	BPZ:ASK71.9	**ASK71.9**
Rotary/linear mounting kit for duct or frame mounting	N4697	BPZ:ASK71.11	**ASK71.11**
Rotary/linear mounting kit with lever and bracket	N4697	BPZ:ASK71.13	**ASK71.13**
Rotary/linear mounting kit with lever	N4697	BPZ:ASK71.14	**ASK71.14**
Bracket for power pack	N4697	BPZ:ASK73.3	**ASK73.3**
Shaft extension	N4699	BPZ:ASK74.7	**ASK74.7**
Weather shield	N4697	BPZ:ASK75.3	**ASK75.3**
Weather shield for rotary-/linear-type actuator GMA/GEB...E	N4697	BPZ:ASK75.6	**ASK75.6**
External auxiliary switch assembly 1 switch	N4615	BPZ:ASC77.1E	**ASC77.1E**
External auxiliary switch assembly 2 switches	N4615	BPZ:ASC77.2E	**ASC77.2E**

Accessories for rotary air damper actuators GCA...1E, GBB...1E, GIB...1E

Product Title	Data sheet	Stock No.	Product No.
Rotary/linear mounting kit for duct mounting	N4699	BPZ:ASK71.1	**ASK71.1**
Rotary/linear mounting kit for frame mounting	N4699	BPZ:ASK71.2	**ASK71.2**
Rotary/linear mounting kit with lever	N4699	BPZ:ASK71.3	**ASK71.3**
Rotary/linear mounting kit with lever and bracket	N4699	BPZ:ASK71.4	**ASK71.4**
Universal lever	N4697	BPZ:ASK71.9	**ASK71.9**
Bracket for power pack	N4699	BPZ:ASK73.1	**ASK73.1**
Flexible bracket for power pack	N4699	BPZ:ASK73.2	**ASK73.2**
Special shaft adapter	N4699	BPZ:ASK74.1	**ASK74.1**
Shaft extension	N4699	BPZ:ASK74.7	**ASK74.7**
Weather shield for rotary actuator	N4699	BPZ:ASK75.1	**ASK75.1**
Weather shield for rotarytype actuator GBB/GCA/GIB...1E	N4699	BPZ:ASK75.4	**ASK75.4**
External auxiliary switch assembly 1 switch	N4615	BPZ:ASC77.1E	**ASC77.1E**
External auxiliary switch assembly 2 switches	N4615	BPZ:ASC77.2E	**ASC77.2E**

Caution!
- ASK73.1 is only valid for GCA12...1E, GCA13...1E, GCA32...1E, GIB13...1E, GIB33...1E
- ASK73.2 is only valid for GCA16...1E and GIB16...1E

Actuators for HVAC applications
Rotary damper actuators with safety function 6 Nm: GNP..1E

GNP..1E

Rotary air damper actuators 6 Nm, with electronic fail-save function

- With self-centering shaft adapter for shaft dia. 6.4...20.5 mm, square 6.4...13 mm, min. shaft length 20 mm
- With position indication and adjustable mechanical limit stop
- With housing made of die-cast aluminium and 0.9 m connecting cable

Data sheet	N4609
Torque	6 Nm
Air damper area	1 m²
Angular rotation	90 °
Positioning time	Opening with motor: 2 s Closing with Super Cap: 2 s
Degree of protection	IP54
Dimensions (W x H x D)	81 x 192 x 63 mm

Range overview GNP...1E

Operating voltage [V]	Positioning signal [V]	Power consumption	Auxiliary switch	Stock No.	Product No.
AC 24 DC 24	DC 0(2)...10 V 0(4)...20 mA	25 VA 18 W	0	BPZ:GNP191.1E	**GNP191.1E**
AC 24 DC 24	DC 0(2)...10 V 0(4)...20 mA	25 VA 18 W	2	BPZ:GNP196.1E	**GNP196.1E**

8

Rotary air damper actuators 6 Nm, without electronic fail-save function

GAP..1E

- With self-centering shaft adapter for shaft dia. 6.4...20.5 mm, square 6.4...13 mm, min. shaft length 20 mm
- With position indication and adjustable mechanical limit stop
- Button for disengaging the gear train to enable manual control
- With housing made of die-cast aluminium and 0.9 m connecting cable

Data sheet	N4608
Torque	6 Nm
Air damper area	1 m²
Angular rotation	90 °
Positioning time	2 s
Degree of protection	IP54
Dimensions (W x H x D)	81 x 192 x 63 mm

Range overview GAP..1E

Operating voltage [V]	Positioning signal [V]	Power consumption	Auxiliary switch	Stock No.	Product No.
AC 24 DC 24	DC 0(2)...10 V 0(4)...20 mA	18 VA 18 W	0	BPZ:GAP191.1E	**GAP191.1E**
AC 24 DC 24	DC 0(2)...10 V 0(4)...20 mA	18 VA 18 W	2	BPZ:GAP196.1E	**GAP196.1E**

Actuators for HVAC applications
Linear damper actuators without spring-return 125 N: GDB..2E

GDB..2E

Linear air damper actuators 125 N, without spring return

- Button for disengaging the gear train to enable manual override
- With base made of steel, plastic housing and 0.9 m connecting cable

Data sheet	N4664
Force	125 N
Air damper area	0.8 m²
Nominal stroke	60 mm
Positioning time	150 s
Degree of protection	IP40
Dimensions (W x H x D)	68 x 152 x 59 mm

Range overview GDB...2E

Operating voltage [V]	Positioning signal	Power consumption	Auxiliary switch	Stock No.	Product No.
AC 24	3-position	2 VA / 1 W	0	BPZ:GDB131.2E	**GDB131.2E**
AC 24	3-position	2 VA / 1 W	0	BPZ:GDB132.2E	**GDB132.2E**
AC 24	3-position	2 VA / 1 W	2	BPZ:GDB136.2E	**GDB136.2E**
AC 230	3-position	2 VA / 1 W	0	BPZ:GDB331.2E	**GDB331.2E**
AC 230	3-position	2 VA / 1 W	0	BPZ:GDB332.2E	**GDB332.2E**
AC 230	3-position	2 VA / 1 W	2	BPZ:GDB336.2E	**GDB336.2E**
AC 24	DC 0...10 V	3 VA / 2 W	0	BPZ:GDB161.2E	**GDB161.2E**
AC 24	DC 0...35 V Adjustable	3 VA / 2 W	0	BPZ:GDB163.2E	**GDB163.2E**
AC 24	DC 0...35 V Adjustable	3 VA / 2 W	2	BPZ:GDB164.2E	**GDB164.2E**
AC 24	DC 0...10 V	3 VA / 2 W	2	BPZ:GDB166.2E	**GDB166.2E**

Types GDB132.2E and 332.2E have a feedback potentiometer.

Basic Documentation No.: Z4664

Linear air damper actuators 250 N, without spring return

GLB..2E

- Button for disengaging the gear train to enable manual override
- With base made of steel, plastic housing and 0.9 m connecting cable

Data sheet	N4664
Force	250 N
Air damper area	1.5 m²
Nominal stroke	60 mm
Positioning time	150 s
Degree of protection	IP40
Dimensions (W x H x D)	68 x 152 x 59 mm

Range overview GLB...2E

Operating voltage [V]	Positioning signal	Power consumption	Auxiliary switch	Stock No.	Product No.
AC 24	3-position	2 VA / 1 W	0	BPZ:GLB131.2E	**GLB131.2E**
AC 24	3-position	2 VA / 1 W	0	BPZ:GLB132.2E	**GLB132.2E**
AC 24	3-position	2 VA / 1 W	2	BPZ:GLB136.2E	**GLB136.2E**
AC 230	3-position	2 VA / 1 W	0	BPZ:GLB331.2E	**GLB331.2E**
AC 230	3-position	2 VA / 1 W	0	BPZ:GLB332.2E	**GLB332.2E**
AC 230	3-position	2 VA / 1 W	2	BPZ:GLB336.2E	**GLB336.2E**
AC 24	DC 0...10 V	3 VA / 2 W	0	BPZ:GLB161.2E	**GLB161.2E**
AC 24	DC 0...35 V Adjustable	3 VA / 2 W	0	BPZ:GLB163.2E	**GLB163.2E**
AC 24	DC 0...35 V Adjustable	3 VA / 2 W	2	BPZ:GLB164.2E	**GLB164.2E**
AC 24	DC 0...10 V	3 VA / 2 W	2	BPZ:GLB166.2E	**GLB166.2E**

Types GLB132.2E and 332.2E have a feedback potentiometer.

Basis Documentation No.: Z4664

Actuators for HVAC applications
Linear damper actuators without spring-return 400 N: GEB..2E

GEB..2E

Linear air damper actuators 400 N, without spring return

- Button for disengaging the gear train to enable manual override
- With housing made of die-cast aluminium and 0.9 m connecting cable

Data sheet	N4653
Force	400 N
Air damper area	3 m²
Nominal stroke	60 mm
Positioning time	150 s
Degree of protection	IP40
Dimensions (W x H x D)	81 x 212 x 60 mm

Range overview GEB...2E

Operating voltage [V]	Positioning signal	Power consumption	Auxiliary switch	Stock No.	Product No.
AC 24	3-position	4 VA / 3.5 W	0	BPZ:GEB131.2E	**GEB131.2E**
AC 24	3-position	4 VA / 3.5 W	0	BPZ:GEB132.2E	**GEB132.2E**
AC 24	3-position	4 VA / 3.5 W	2	BPZ:GEB136.2E	**GEB136.2E**
AC 230	3-position	3 VA / 3 W	0	BPZ:GEB331.2E	**GEB331.2E**
AC 230	3-position	3 VA / 3 W	0	BPZ:GEB332.2E	**GEB332.2E**
AC 230	3-position	3 VA / 3 W	2	BPZ:GEB336.2E	**GEB336.2E**
AC 24	DC 0...10 V DC 2...10 V	6 VA / 5.5 W	0	BPZ:GEB161.2E	**GEB161.2E**
AC 24	DC 0...35 V Adjustable	6 VA / 5.5 W	0	BPZ:GEB163.2E	**GEB163.2E**
AC 24	DC 0...35 V Adjustable	6 VA / 5.5 W	2	BPZ:GEB164.2E	**GEB164.2E**
AC 24	DC 0...10 V DC 2...10 V	6 VA / 5.5 W	2	BPZ:GEB166.2E	**GEB166.2E**

Types GEB132.2E and 332.2E have a feedback potentiometer.

Basic Documentation No.: Z4653

Linear air damper actuators 550 N, without spring return

GBB..2E

- Button for disengaging the gear train to enable manual override
- With housing made of die-cast aluminium and 0.9 m connecting cable

Data sheet	N4656
Force	550 N
Air damper area	4 m²
Nominal stroke	70 mm
Positioning time	150 s
Degree of protection	IP54
Dimensions (W x H x D)	100 x 298 x 67.5 mm

Range overview GBB...2E

Operating voltage [V]	Positioning signal	Power consumption	Auxiliary switch	Stock No.	Product No.
AC 24	3-position	7 VA / 7 W	0	BPZ:GBB131.2E	**GBB131.2E**
AC 24	3-position	7 VA / 7 W	2	BPZ:GBB135.2E	**GBB135.2E**
AC 24	3-position	7 VA / 7 W	2	BPZ:GBB136.2E	**GBB136.2E**
AC 230	3-position	8 VA / 5 W	0	BPZ:GBB331.2E	**GBB331.2E**
AC 230	3-position	8 VA / 5 W	2	BPZ:GBB335.2E	**GBB335.2E**
AC 230	3-position	8 VA / 5 W	2	BPZ:GBB336.2E	**GBB336.2E**
AC 24	DC 0...10 V	8 VA / 8 W	0	BPZ:GBB161.2E	**GBB161.2E**
AC 24	DC 0...35 V Adjustable	8 VA / 8 W	0	BPZ:GBB163.2E	**GBB163.2E**
AC 24	DC 0...35 V Adjustable	8 VA / 8 W	2	BPZ:GBB164.2E	**GBB164.2E**
AC 24	DC 0...10 V	8 VA / 8 W	2	BPZ:GBB166.2E	**GBB166.2E**

Types GBB135.2E and 335.2E also have a feedback potentiometer.

Basic Documentation No.: Z4656

Actuators for HVAC applications
Linear damper actuators without spring-return 150 N: GHD..

GHD131.2E..

Linear air damper actuator 150 N

- Linear drive actuator to adjust air volume controllers, ceiling outlets and dampers in VAV systems as well as to adjust dampers in induction units and mixing boxes.
- Force 150 N

Data sheet N4689

Range overview GHD131.2E..

Operating voltage [V]	Positioning signal	Power consumption [VA]	Spindle length	Stock No.	Product No.
AC 24	3-position	1.5		BPZ:GHD131.2E	**GHD131.2E**
AC 24	3-position	1.5	130	BPZ:GHD131.2E/130	**GHD131.2E/130**
AC 24	3-position	1.5	180	BPZ:GHD131.2E/180	**GHD131.2E/180**
AC 24	3-position	1.5	230	BPZ:GHD131.2E/230	**GHD131.2E/230**
AC 24	3-position	1.5	300	BPZ:GHD131.2E/300	**GHD131.2E/300**

Accessories for linear air damper actuators GDB..2E and GLB..2E

Product Title	Data sheet	Stock No.	Product No.
Clamp for linkage (5...8 mm dia.)	N4698	BPZ:ASK55.2	**ASK55.2**
Weather shield for rotary-/linear-type actuator GDB/GLB/GSF...E	N4698	BPZ:ASK75.5	**ASK75.5**
Fixing screw	N4698	BPZ:ASK72.5	**ASK72.5**

Accessories for linear air damper actuators GEB..2E

Product Title	Data sheet	Stock No.	Product No.
Linear/rotary mounting kit with bracket	N4697	BPZ:ASK72.3	**ASK72.3**
Fixing screw	N4697	BPZ:ASK72.4	**ASK72.4**
Weather shield for rotary-/linear-type actuator GMA/GEB...E	N4697	BPZ:ASK75.6	**ASK75.6**

Accessories for linear air damper actuators GBB...2E

Product Title	Data sheet	Stock No.	Product No.
Linear/rotary mounting kit with cardan joint	N4699	BPZ:ASK72.1	**ASK72.1**
Linear/rotary mounting kit with bracket	N4699	BPZ:ASK72.2	**ASK72.2**
Fixing screw	N4697	BPZ:ASK72.4	**ASK72.4**
Weather shield for linear actuator	N4699	BPZ:ASK75.2	**ASK75.2**

Actuators for air volume control
VAV compact controllers with KNX/PL-Link communication

G..B181.1E/KN

VAV compact controller KNX/PL-Link

- Networked compact controller with KNX (S-Mode/LTE-Mode) and PL-Link capability for plants with variable air volume flow
- Integrated, highly precise differential pressure sensor, damper actuator and digitally configurable air volume controller
- Nominal torque 5 or 10 Nm, air damper rotation angle mechanically adjustable between 0 and 90°
- Configurable as single device per room or for cascade control with pressure ratio 1:1, positive pressure, or negative pressure
- Prewired with a 0.9 m connecting cable and a 0.9 m KNX bus cable

Data sheet	N3547
Angular rotation	90 °
Positioning time	150 s
Degree of protection	IP54
Dimensions (W x H x D)	71 x 158 x 61 mm

Range overview G..B181.1E/KN

Torque [Nm]	Operating voltage [V]	Air damper area [m²]	Communication	Power consumption [VA]	Stock No.	Product No.
5	AC 24	0.8	KNX (S-mode and LTE-mode) or PL-Link	3	S55499-D134	**GDB181.1E/KN**
10	AC 24	1.5	KNX (S-mode and LTE-mode) or PL-Link	3	S55499-D135	**GLB181.1E/KN**

Basic Documentation No.: P3547

VAV compact controller

G..B181.1E/3

- Compact controller for plants with variable and constant air volume flow
- Integrated, highly precise differential pressure sensor, damper actuator and digitally configurable air volume controller
- Nominal torque 5 or 10 Nm, air damper rotation angle mechanically adjustable between 0 and 90°
- Optionally configurable as VAV compact controller or as damper actuator/differential pressure sensor unit
- Prewired with a 0.9 m connecting cable

Data sheet	N3544
Angular rotation	90 °
Positioning time	150 s
Degree of protection	IP54
Dimensions (W x H x D)	71 x 158 x 61 mm

Range overview G..B181.1E/3

Torque [Nm]	Operating voltage [V]	Air damper area [m²]	Positioning signal	Power consumption [VA]	Stock No.	Product No.
5	AC 24	0.8	DC 0...10 DC 2...10 3-position	3	BPZ:GDB181.1E/3	**GDB181.1E/3**
10	AC 24	1.5	DC 0...10 DC 2...10 3-position	3	BPZ:GLB181.1E/3	**GLB181.1E/3**

Basic Documentation No.: P3544

8

Actuators for air volume control
VAV modular controllers ASV181.1E/3

ASV181.1E/3

VAV modular controller

- Modular controller for plants with variable and constant air volume flow
- Integrated, highly precise differential pressure sensor and digitally configurable air volume controller
- For connection to an OpenAir™ family 3-position air damper actuator with high torque or safety functions
- Prewired with a 0.9 m cable and a 0.3 m connecting cable

Data sheet	N3545
Degree of protection	IP54
Operating voltage	AC 24 V
Power consumption	1 VA
Positioning signal	DC 0...10 V DC 2...10 V 3-position
Dimensions (W x H x D)	68 x 144 x 45 mm

	Stock No.	Product No.
	BPZ:ASV181.1E/3	**ASV181.1E/3**

Accessories for G..B181.1../.. and ASV181.1E/3

Product Title	Data sheet	Stock No.	Product No.
Manual operator unit	N5851	BPZ:AST10	**AST10**
Interface converter	N5852	BPZ:AST11	**AST11**
Service kit		BPZ:AST21	**AST21**
PC software for service	N5854	BPZ:ACS941	**ACS941**

AST10 for G..B181.1E/3 after Serie E and G..B181.1E/KN with reduced functionality usable only

More accessories, see type GLB...1E / GDB...1E

8

Actuators for fire protection dampers

GNA126.1E..

- Rotary type
- 2-position
- Spring return to failsafe position
- Temperature monitoring unit (Tf1: outside the duct 72 °C or Tf2: inside the duct 72 °C)
- Fixed auxiliary switches for switching points 5 ° and 80 °
- Rigid connection between actuator and damper square shafts (8x8, 10x10, 12x12, 15x15)
- Manual setting
- Position indicator
- Robust, lightweight all metal housing made from die-cast aluminium and 0.9 m connecting cable
- Degree of protection: Temperature monitoring unit IP30 / Actuator IP54

Data sheet	N4620
Torque	7 Nm
Air damper area	1 m²
Angular rotation	90 °
Positioning time	Open with motor: 90 s Close with spring return: 15 s
Power consumption	5 VA / 3.5 W
Dimensions (W x H x D)	81 x 178 x 63 mm

Range overview GNA126.1E.. without temperature monitoring unit

Operating voltage [V]	Shaft linkage [mm]	Stock No.	Product No.
AC 24 DC 24	8 x 8	BPZ:GNA126.1E/08	**GNA126.1E/08**
AC 24 DC 24	10 x 10	BPZ:GNA126.1E/10	**GNA126.1E/10**
AC 24 DC 24	12 x 12	BPZ:GNA126.1E/12	**GNA126.1E/12**
AC 24 DC 24	15 x 15	BPZ:GNA126.1E/15	**GNA126.1E/15**

Range overview GNA126.1E/T.. with temperature monitoring unit

Operating voltage [V]	Shaft linkage [mm]	Stock No.	Product No.
AC 24 DC 24	8 x 8	BPZ:GNA126.1E/T08	**GNA126.1E/T08**
AC 24 DC 24	10 x 10	BPZ:GNA126.1E/T10	**GNA126.1E/T10**
AC 24 DC 24	12 x 12	BPZ:GNA126.1E/T12	**GNA126.1E/T12**
AC 24 DC 24	15 x 15	BPZ:GNA126.1E/T15	**GNA126.1E/T15**

Actuators for fire and smoke protection dampers
Actuators for fire and smoke protection dampers 7 Nm: GNA..1E

GNA326.1E..

Actuators for fire protection damper

- Rotary type
- 2-position
- Spring return to failsafe position
- Temperature monitoring unit (Tf1: outside the duct 72 °C or Tf2: inside the duct 72 °C)
- Fixed auxiliary switches for switching points 5 ° and 80 °
- Rigid connection between actuator and damper square shafts (8x8, 10x10, 12x12, 15x15)
- Manual setting
- Position indicator
- Robust, lightweight all metal housing made from die-cast aluminium and 0.9 m connecting cable
- Degree of protection: Temperature monitoring unit IP30 / Actuator IP54

Data sheet	N4620
Torque	7 Nm
Air damper area	1 m²
Angular rotation	90 °
Positioning time	Open with motor: 90 s Closing with spring return 15 s
Power consumption	7.5 VA
Dimensions (W x H x D)	81 x 178 x 63 mm

Range overview GNA326.1E.. without temperature monitoring unit

Operating voltage [V]	Shaft linkage [mm]	Stock No.	Product No.
AC 230	8 x 8	BPZ:GNA326.1E/08	**GNA326.1E/08**
AC 230	10 x 10	BPZ:GNA326.1E/10	**GNA326.1E/10**
AC 230	12 x 12	BPZ:GNA326.1E/12	**GNA326.1E/12**
AC 230	15 x 15	BPZ:GNA326.1E/15	**GNA326.1E/15**

Range overview GNA326.1E/T.. with temperature monitoring unit

Operating voltage [V]	Shaft linkage [mm]	Stock No.	Product No.
AC 230	8 x 8	BPZ:GNA326.1E/T08	**GNA326.1E/T08**
AC 230	10 x 10	BPZ:GNA326.1E/T10	**GNA326.1E/T10**
AC 230	12 x 12	BPZ:GNA326.1E/T12	**GNA326.1E/T12**
AC 230	15 x 15	BPZ:GNA326.1E/T15	**GNA326.1E/T15**

Accessories for GNA126.1E.. and GNA326.1E..

Product Title	Stock No.	Product No.
Interlocking plate for fire protection applications	BPZ:ASK79.3/10	**ASK79.3/10**
Interlocking plate for fire protection applications	BPZ:ASK79.3/12	**ASK79.3/12**

Actuators for fire protection dampers

GGA126.1E..

- Rotary type
- 2-position
- Spring return to failsafe position
- Temperature monitoring unit (Tf1: outside the duct 72 °C or Tf2: inside the duct 72 °C)
- Fixed auxiliary switches for switching points 5 ° and 80 °
- Rigid connection between actuator and damper square shafts (8x8, 10x10, 12x12, 15x15)
- Manual setting
- Position indicator
- Robust, lightweight all metal housing made from die-cast aluminium and 0.9 m connecting cable
- Degree of protection: Temperature monitoring unit IP30 / Actuator IP54

Data sheet	N4617
Torque	18 Nm
Air damper area	2.5 m²
Angular rotation	90 °
Positioning time	Open with motor: 90 s Close with spring return 15 s
Power consumption	7 VA / 4 W
Dimensions (W x H x D)	100 x 264 x 71 mm

Range overview GGA126.1E.. without temperature monitoring unit

Operating voltage [V]	Shaft linkage [mm]	Stock No.	Product No.
AC 24 DC 24	8 x 8	BPZ:GGA126.1E/08	**GGA126.1E/08**
AC 24 DC 24	10 x 10	BPZ:GGA126.1E/10	**GGA126.1E/10**
AC 24 DC 24	12 x 12	BPZ:GGA126.1E/12	**GGA126.1E/12**
AC 24 DC 24	15 x 15	BPZ:GGA126.1E/15	**GGA126.1E/15**

Range overview GGA126.1E/T.. with temperature monitoring unit

Operating voltage [V]	Shaft linkage [mm]	Stock No.	Product No.
AC/DC 24	8 x 8	BPZ:GGA126.1E/T08	**GGA126.1E/T08**
AC/DC 24	10 x 10	BPZ:GGA126.1E/T10	**GGA126.1E/T10**
AC/DC 24	12 x 12	BPZ:GGA126.1E/T12	**GGA126.1E/T12**
AC/DC 24	15 x 15	BPZ:GGA126.1E/T15	**GGA126.1E/T15**

Actuators for fire and smoke protection dampers
Actuators for fire and smoke protection dampers 18 Nm: GGA..1E

GGA326.1E..

Actuators for fire protection dampers

- Rotary type
- 2-position
- Spring return to failsafe position
- Temperature monitoring unit (Tf1: outside the duct 72 °C or Tf2: inside the duct 72 °C)
- Fixed auxiliary switches for switching points 5 ° and 80 °
- Rigid connection between actuator and damper square shafts (8x8, 10x10, 12x12, 15x15)
- Manual setting
- Position indicator
- Robust, lightweight all metal housing made from die-cast aluminium and 0.9 m connecting cable
- Degree of protection: Temperature monitoring unit IP30 / Actuator IP54

Data sheet	N4617
Torque	18 Nm
Air damper area	2.5 m²
Angular rotation	90 °
Positioning time	Open with motor: 90 s Close with spring return 15 s
Power consumption	8 VA
Dimensions (W x H x D)	100 x 264 x 71 mm

Range overview GGA326.1E.. without temperature monitoring unit

Operating voltage [V]	Shaft linkage [mm]	Stock No.	Product No.
AC 230	8 x 8	BPZ:GGA326.1E/08	**GGA326.1E/08**
AC 230	10 x 10	BPZ:GGA326.1E/10	**GGA326.1E/10**
AC 230	12 x 12	BPZ:GGA326.1E/12	**GGA326.1E/12**
AC 230	15 x 15	BPZ:GGA326.1E/15	**GGA326.1E/15**

Range overview GGA326.1E/T.. with temperature monitoring unit

Operating voltage [V]	Shaft linkage [mm]	Stock No.	Product No.
AC 230	8 x 8	BPZ:GGA326.1E/T08	**GGA326.1E/T08**
AC 230	10 x 10	BPZ:GGA326.1E/T10	**GGA326.1E/T10**
AC 230	12 x 12	BPZ:GGA326.1E/T12	**GGA326.1E/T12**
AC 230	15 x 15	BPZ:GGA326.1E/T15	**GGA326.1E/T15**

Accessories for GGA126.1E.. and GGA326.1E..

Product Title	Stock No.	Product No.
Interlocking plate for fire protection applications	BPZ:ASK79.3/10	**ASK79.3/10**
Interlocking plate for fire protection applications	BPZ:ASK79.3/12	**ASK79.3/12**

Spring Return, UL Smoke, Fire/Smoke, 53 lb-in (6 Nm), 24 Vac/Vdc, 2-position Control, 15 sec Run

GND121.1U

OpenAir™ GND Series Electric Damper Actuator, rotary, spring return, 53 lb-in (6 Nm), 24 Vac/Vdc, 2-position control, 15 sec run time, Fire/Smoke. Designed for UL Listed Smoke Control Dampers and for Combination Fire/Smoke Rated Dampers.

Data sheet	155-746
Torque	53 lb-in
Actuation Style	Rotary
Air damper area	12 ft²
Operating voltage	24 Vac/Vdc
Control Signal	2-position
Angular rotation	90°
Ambient temperature, operation	0 to 140 °F
Positioning time	15 s
Spring return function	Spring return
Power consumption	20 VA
Dimensions (W x H x D)	9 x 3.25 x 3 in

Stock No.	Product No.
BPZ:GND121.1U	**GND121.1U**

Spring Return, UL Smoke, Fire/Smoke, 53 lb-in (6 Nm), 24 Vac/Vdc, 2-position Control, 15 sec Run, Elect. fuse link capable

GND121.1U/F

OpenAir™ GND Series Electric Damper Actuator, rotary, spring return, 53 lb-in (6 Nm), 24 Vac/Vdc, 2-position control, 15 sec run time, Fire/Smoke, electric fuse link connection. Designed for UL Listed Smoke Control Dampers and for Combination Fire/Smoke Rated Dampers. ASK79.xxx Electronic Fuse link is temperature specific and sold separately.

Data sheet	155-746
Torque	53 lb-in
Actuation Style	Rotary
Air damper area	12 ft²
Operating voltage	24 Vac/Vdc
Control Signal	2-position
Angular rotation	90°
Ambient temperature, operation	0 to 140 °F
Positioning time	15 s
Spring return function	Spring return
Power consumption	20 VA
Dimensions (W x H x D)	9 x 3.25 x 3 in

Stock No.	Product No.
BPZ:GND121.1U/F	**GND121.1U/F**

Actuators for fire and smoke protection dampers
Actuators for fire and smoke protection dampers 6 Nm: GND..

GND321.1U

Spring Return, UL Smoke, Fire/Smoke, 53 lb-in (6 Nm), 230 Vac, 2-position Control, 15 sec Run

OpenAir™ GND Series Electric Damper Actuator, rotary, spring return, 53 lb-in (6 Nm), 230 Vac, 2-position control, 15 sec run time, Fire/Smoke. Designed for UL Listed Smoke Control Dampers and for Combination Fire/Smoke Rated Dampers.

Data sheet	155-746
Torque	53 lb-in
Actuation Style	Rotary
Air damper area	12 ft²
Operating voltage	230 Vac
Control Signal	2-position
Angular rotation	90°
Ambient temperature, operation	0 to 140 °F
Positioning time	15 s
Spring return function	Spring return
Power consumption	20 VA
Dimensions (W x H x D)	9 x 3.25 x 3 in mm

Stock No.	Product No.
BPZ:GND321.1U	**GND321.1U**

GND321.1U/F

Spring Return, UL Smoke, Fire/Smoke, 53 lb-in (6 Nm), 230 Vac, 2-position Control, 15 sec Run, Elect. fuse link capable

OpenAir™ GND Series Electric Damper Actuator, rotary, spring return, 53 lb-in (6 Nm), 230 Vac, 2-position control, 15 sec run time, Fire/Smoke, electric fuse link connection. Designed for UL Listed Smoke Control Dampers and for Combination Fire/Smoke Rated Dampers. ASK79.xxx Electronic Fuse link is temperature specific and sold separately.

Data sheet	155-746
Torque	53 lb-in
Actuation Style	Rotary
Air damper area	12 ft²
Operating voltage	230 Vac
Control Signal	2-position
Angular rotation	90°
Ambient temperature, operation	0 to 140 °F
Positioning time	15 s
Spring return function	Spring return
Power consumption	20 VA
Dimensions (W x H x D)	9 x 3.25 x 3 in

Stock No.	Product No.
BPZ:GND321.1U/F	**GND321.1U/F**

Spring Return, UL Smoke, Fire/Smoke, 53 lb-in (6 Nm), 24 Vac/Vdc, 2-position Control, 15 sec Run, 2-Aux

GND126.1U

OpenAir™ GND Series Electric Damper Actuator, rotary, spring return, 53 lb-in (6 Nm), 24 Vac/Vdc, 2-position control, 15 sec run time, Fire/Smoke, dual auxiliary switches. Designed for UL Listed Smoke Control Dampers and for Combination Fire/Smoke Rated Dampers.

Data sheet	155-746
Torque	53 lb-in
Actuation Style	Rotary
Air damper area	12 ft²
Operating voltage	24 Vac/Vdc
Control Signal	2-position
Angular rotation	90°
Ambient temperature, operation	0 to 140 °F
Positioning time	15 s
Spring return function	Spring return
Power consumption	20 VA
Dimensions (W x H x D)	9 x 3.25 x 3 in

Stock No.	Product No.
BPZ:GND126.1U	**GND126.1U**

Spring Return, UL Smoke, Fire/Smoke, 53 lb-in (6 Nm), 24 Vac/Vdc, 2-position Control, 15 sec Run, 2-Aux, Elect. fuse link capable

GND126.1U/F

OpenAir™ GND Series Electric Damper Actuator, rotary, spring return, 53 lb-in (6 Nm), 24 Vac/Vdc, 2-position control, 15 sec run time, Fire/Smoke, dual auxiliary switches, electric fuse link connection. Designed for UL Listed Smoke Control Dampers and for Combination Fire/Smoke Rated Dampers. ASK79.xxx Electronic Fuse link is temperature specific and sold separately.

Data sheet	155-746
Torque	53 lb-in
Actuation Style	Rotary
Air damper area	12 ft²
Operating voltage	24 Vac/Vdc
Control Signal	2-position
Angular rotation	90°
Ambient temperature, operation	0 to 140 °F
Positioning time	15 s
Spring return function	Spring return
Power consumption	20 VA
Dimensions (W x H x D)	

Stock No.	Product No.
BPZ:GND126.1U/F	**GND126.1U/F**

Actuators for fire and smoke protection dampers
Actuators for fire and smoke protection dampers 6 Nm: GND..

GND326.1U

Spring Return, UL Smoke, Fire/Smoke, 53 lb-in (6 Nm), 230 Vac, 2-position Control, 15 sec Run, 2-Aux

OpenAir™ GND Series Electric Damper Actuator, rotary, spring return, 53 lb-in (6 Nm), 230 Vac, 2-position control, 15 sec run time, Fire/Smoke, dual auxiliary switches. Designed for UL Listed Smoke Control Dampers and for Combination Fire/Smoke Rated Dampers.

Data sheet	155-746
Torque	53 lb-in
Actuation Style	Rotary
Air damper area	12 ft²
Operating voltage	230 Vac
Control Signal	2-position
Angular rotation	90°
Ambient temperature, operation	0 to 140 °F
Positioning time	15 s
Spring return function	Spring return
Power consumption	20 VA
Dimensions (W x H x D)	9 x 3.25 x 3 in

Stock No.	Product No.
BPZ:GND326.1U	**GND326.1U**

GND326.1U/F

Spring Return, UL Smoke, Fire/Smoke, 53 lb-in (6 Nm), 230 Vac, 2-position Control, 15 sec Run, 2-Aux, Elect. fuse link capable

OpenAir™ GND Series Electric Damper Actuator, rotary, spring return, 53 lb-in (6 Nm), 230 Vac, 2-position control, 15 sec run time, Fire/Smoke, dual auxiliary switches, electric fuse link connection. Designed for UL Listed Smoke Control Dampers and for Combination Fire/Smoke Rated Dampers. ASK79.xxx Electronic Fuse link is temperature specific and sold separately.

Data sheet	155-746
Torque	53 lb-in
Actuation Style	Rotary
Air damper area	12 ft²
Operating voltage	230 Vac
Control Signal	2-position
Angular rotation	90°
Ambient temperature, operation	0 to 140 °F
Positioning time	15 s
Spring return function	Spring return
Power consumption	20 VA
Dimensions (W x H x D)	9 x 3.25 x 3 in

Stock No.	Product No.
BPZ:GND326.1U/F	**GND326.1U/F**

8

Accessories for GND..

Product Title	Stock No.	Product No.
OpenAir Electronic Fusible Link.	BPZ:ASK79.165	**ASK79.165**
OpenAir Electronic Fusible Link.	BPZ:ASK79.250	**ASK79.250**
OpenAir Electronic Fusible Link.	BPZ:ASK79.350	**ASK79.350**

Spring Return, 142 lb-in (16 Nm), 24 Vac/dc, 2-position Control, 15 sec Run, Fire/Smoke

GGD121.1U

OpenAir™ GGD Series Electric Damper Actuator, rotary, spring return, 142 lb-in (16 Nm), 24 Vac/dc, 2-position control, 15 sec run time, Fire/Smoke

Data sheet	152-046P25
Torque	142 lb-in
Actuation Style	Rotary
Air damper area	36 ft²
Operating voltage	24 Vac
Control Signal	2-position
Angular rotation	90 °
Ambient temperature, operation	0 to 130 °F
Positioning time	15 s
Spring return function	Spring return
Power consumption	150 VA
Dimensions (W x H x D)	12 x 4.75 x 2.88 in

Stock No.	Product No.
BPZ:GGD121.1U	**GGD121.1U**

Spring Return, 142 lb-in (16 Nm), 230 Vac, 2-position Control, 15 sec Run, Fire/Smoke

GGD321.1U

OpenAir™ GGD Series Electric Damper Actuator, rotary, spring return, 142 lb-in (16 Nm), 230 Vac, 2-position control, 15 sec run time, Fire/Smoke

Data sheet	152-046P25
Torque	142 lb-in
Actuation Style	Rotary
Air damper area	36 ft²
Operating voltage	230 Vac
Control Signal	2-position
Angular rotation	90 °
Ambient temperature, operation	0 to 130 °F
Positioning time	15 s
Spring return function	Spring return
Power consumption	150 VA
Dimensions (W x H x D)	12 x 4.75 x 2.88 in

Stock No.	Product No.
BPZ:GGD321.1U	**GGD321.1U**

Variable speed drives

Overview and selection tools	Overview of product details	9-2
Variable speed drives	G120P..	9-5
	Accessories and spare parts for G120P..	9-10

Order instruction

G120P Bundle | **order separately**

Control Unit
CU230P-2 BT
incl. shield connection kit

+

Power Module
PM230
3 AC 380 ... 480 V
0.37 ... 90 kW

+

Operator panel
IOP
Intelligent
Operator
Panel
or
BOP-2
Basic Operator
Panel
or
Blanking
cover

Optional accessory
Memory cards
PC inverter connection kit 2
CU230P-2 DP (PROFIBUS DP)
CU230P-2 CAN (CANopen)

Spare parts
Small mounting parts
Fan units

Power range G120P

		Dimension / WxHxD			
		IP55		IP20	
kW	Frame size	Filter A	Filter B	Filter A	Filter B
0.37	A	154x460x249	154x460x249	73x196x223	73x202x288
0.55	A	154x460x249	154x460x249	73x196x223	73x202x288
0.75	A	154x460x249	154x460x249	73x196x223	73x202x288
1.1	A	154x460x249	154x460x249	73x196x223	73x202x288
1.5	A	154x460x249	154x460x249	73x196x223	73x202x288
2.2	A	154x460x249	154x460x249	73x196x223	73x202x288
3	A	154x460x249	154x460x249	73x196x223	73x202x288
4	B	180x540x249	180x540x249	100x292x223	100x297x308
5.5	B	180x540x249	180x540x249	100x292x223	100x297x308
7.5	B	180x540x249	180x540x249	100x292x223	100x297x308
11	C	230x620x249	230x620x249	140x355x223	140x359x318
15	C	230x620x249	230x620x249	140x355x223	140x359x318
18.5	C/D	230x620x249	320x640x329	140x355x223	140x359x318
22	D	320x640x329	320x640x329	275x512x262	375x512x262
30	D	320x640x329	320x640x329	275x512x262	375x512x262
37	E	320x751x329	320x751x329	275x635x262	385x635x262
45	E	320x751x329	320x751x329	275x635x262	385x635x262
55	F	410x915x416	410x915x416	350x934x374	500x934x374
75	F	410x915x416	410x915x416	350x934x374	500x934x374
90	F	410x915x416	410x915x416	not available	not available

Remark IP55: The depth increases by 5mm if BOP-2 or blind cover is used. The Depth increases by 15mm if IOP is used
Remark IP20: The height increases if screen plate is used:
FSA: + 80 mm; FSB: + 78 mm; FSC: + 77 mm; FSD, FSE, FSF: + 123 mm.
In addition please consider 10mm increase if BOP-2 is used and 20mm if IOP is used.

Selection Guide for EMC-filter

Product standard EN 61800-3				
Environment	1st environment	1st or 2nd environment (building operator decision)	2nd environment	2nd environment
Category	C1	C2	C3	C4
Limits according to EN 55011	Class B	Class A1 (+ Warning hints)	Class A2 (+ Warning hints)	Values exceeds limit defined by class A2
	G120P with B-filter			
		G120P with A-filter		

1st environment/class B: residential areas

1st or 2nd environment/class A or B: special areas

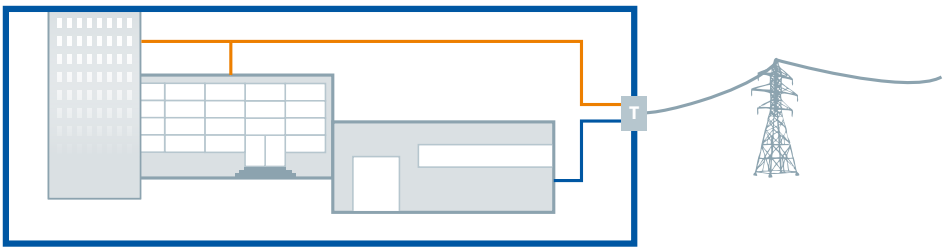

2nd environment/class A: industrial areas

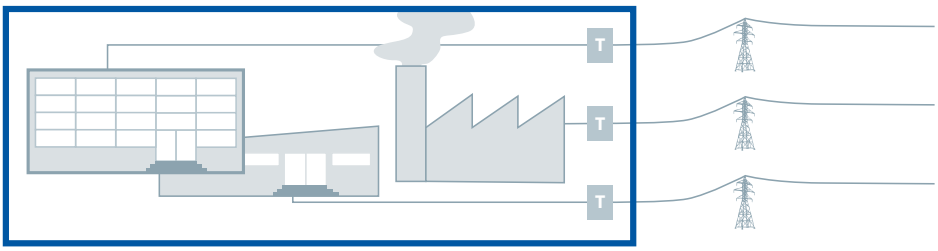

9

Variable Speed Drive for pumps and fans

G120P..

Variable speed drive for energy-optimized speed control of pump, compressor and fan motors in building control applications, including: Powermodule PM230, ControlUnit CU230P-2 BT with screening plate without panel. Available degree of protection: IP20 and IP55.

The G120P Bundle does not contain an operator panel or blanking cover. To achieve the IP55 or IP54 protection rating with the IP55 devices, please order an operator panel or blanking cover separately.

Data sheet	N5111
Standard	EN 61800-3
Operating temperature	0...60 °C
Overload capacity	FSA-FSC: 110% for 57 sec. and 150% for 3 sec. every 300 sec. FSD-FSF: 110% for 60 sec. every 300 sec.
Operating voltage	400 V
Frequency	47...63 Hz
Output frequency	0...650 Hz
PWM frequency	4 kHz...16 kHz (2 kHz steps)
Protection functions	- Overvoltage and undervoltage - VSD overtemperature - Motor temperature with PTC via special input terminals - I^2t motor, thermal - Ground fault, short circuit - Stalling current and locked rotor
Digital inputs, number	6
Digital inputs	Potential-free input signal Programmable
Analog inputs, number	4
Analog inputs	Switchable, programmable scaling
Analog input, signal	DC -10...10 V DC 0...10 V DC 0...20 mA DC 2...10 V DC 4...20 mA Pt1000 LG-Ni1000
Analog outputs, number	2
Analog outputs	Programmable scaling Switchable
Analog output, signal	DC 0...10 V DC 2...10 V DC 0...20 mA DC 4...20 mA
Relay outputs, number	3
Relay outputs	Potential-free switchover contacts Programmable
Relay output, switching voltage	AC 250 V DC 30 V
Relay output, switching current	AC 2 A DC 5 A
Communication	Modbus/RTU RS485/USS BACnetMS/TP PROFIBUS (optional) CANopen (optional)
Product conformity	CE C-TIC

Variable speed drives
G120P..

Range overview G120P.. IP55 with integrated EMC-Filter, class B (C1); 400V

Power output [kW]	Dimensions (W x H x D) [mm]	Weight [kg]	Stock No.	Product No.
0.37	154 x 460 x 249	5.01	6SL3200-6AM11-3BH0	G120P-0.37/35B
0.55	154 x 460 x 249	5.01	6SL3200-6AM11-7BH0	G120P-0.55/35B
0.75	154 x 460 x 249	5.01	6SL3200-6AM12-2BH0	G120P-0.75/35B
1.1	154 x 460 x 249	5.01	6SL3200-6AM13-1BH0	G120P-1.1/35B
1.5	154 x 460 x 249	5.01	6SL3200-6AM14-1BH0	G120P-1.5/35B
2.2	154 x 460 x 249	5.01	6SL3200-6AM15-8BH0	G120P-2.2/35B
3	154 x 460 x 249	5.01	6SL3200-6AM17-7BH0	G120P-3/35B
4	180 x 540 x 249	7.01	6SL3200-6AM21-0BH0	G120P-4/35B
5.5	180 x 540 x 249	7.01	6SL3200-6AM21-3BH0	G120P-5.5/35B
7.5	180 x 540 x 249	7.01	6SL3200-6AM21-8BH0	G120P-7.5/35B
11	230 x 620 x 249	10.21	6SL3200-6AM22-6BH0	G120P-11/35B
15	230 x 620 x 249	10.21	6SL3200-6AM23-2BH0	G120P-15/35B
18.5	320 x 640 x 329	31.71	6SL3200-6AM23-8BH0	G120P-18.5/35B
22	320 x 640 x 329	31.71	6SL3200-6AM24-5BH0	G120P-22/35B
30	320 x 640 x 329	31.71	6SL3200-6AM26-0BH0	G120P-30/35B
37	320 x 751 x 329	37.71	6SL3200-6AM27-5BH0	G120P-37/35B
45	320 x 751 x 329	37.71	6SL3200-6AM28-8BH0	G120P-45/35B
55	410 x 915 x 416	70.71	6SL3200-6AM31-1BH0	G120P-55/35B
75	410 x 915 x 416	70.71	6SL3200-6AM31-4BH0	G120P-75/35B
90	410 x 915 x 416	70.71	6SL3200-6AM31-7BH0	G120P-90/35B

IP55: The depth increases when using a BOP-2/Blanking Cover by +5mm and with an IOP +15mm

Range overview G120P.. IP55 with integrated EMC-Filter, class A (C2); 400V

Power output [kW]	Dimensions (W x H x D) [mm]	Weight [kg]	Stock No.	Product No.
0.37	154 x 460 x 249	5.01	6SL3200-6AM11-3AH0	G120P-0.37/35A
0.55	154 x 460 x 249	5.01	6SL3200-6AM11-7AH0	G120P-0.55/35A
0.75	154 x 460 x 249	5.01	6SL3200-6AM12-2AH0	G120P-0.75/35A
1.1	154 x 460 x 249	5.01	6SL3200-6AM13-1AH0	G120P-1.1/35A
1.5	154 x 460 x 249	5.01	6SL3200-6AM14-1AH0	G120P-1.5/35A
2.2	154 x 460 x 249	5.01	6SL3200-6AM15-8AH0	G120P-2.2/35A
3	154 x 460 x 249	5.01	6SL3200-6AM17-7AH0	G120P-3/35A
4	180 x 540 x 249	7.01	6SL3200-6AM21-0AH0	G120P-4/35A
5.5	180 x 540 x 249	7.01	6SL3200-6AM21-3AH0	G120P-5.5/35A
7.5	180 x 540 x 249	7.01	6SL3200-6AM21-8AH0	G120P-7.5/35A
11	230 x 620 x 249	10.21	6SL3200-6AM22-6AH0	G120P-11/35A
15	230 x 620 x 249	10.21	6SL3200-6AM23-2AH0	G120P-15/35A
18.5	230 x 620 x 249	10.21	6SL3200-6AM23-8AH0	G120P-18.5/35A
22	320 x 640 x 329	31.71	6SL3200-6AM24-5AH0	G120P-22/35A
30	320 x 640 x 329	31.71	6SL3200-6AM26-0AH0	G120P-30/35A
37	320 x 751 x 329	37.71	6SL3200-6AM27-5AH0	G120P-37/35A
45	320 x 751 x 329	37.71	6SL3200-6AM28-8AH0	G120P-45/35A
55	410 x 915 x 416	70.71	6SL3200-6AM31-1AH0	G120P-55/35A
75	410 x 915 x 416	70.71	6SL3200-6AM31-4AH0	G120P-75/35A
90	410 x 915 x 416	70.71	6SL3200-6AM31-7AH0	G120P-90/35A

IP55: The depth increases when using a BOP-2/Blanking Cover by +5mm and with an IOP +15mm

NEW PRODUCT

Variable speed drives
G120P..

Range overview G120P.. IP20 with external EMC-Filter, class B (C1); 400V

Power output [kW]	Dimensions (W x H x D) [mm]	Weight [kg]	Stock No.	Product No.
0.37	73 x 202 x 288	4.06	6SL3200-6AE11-3BH0	G120P-0.37/32B
0.55	73 x 202 x 288	4.06	6SL3200-6AE11-7BH0	G120P-0.55/32B
0.75	73 x 202 x 288	4.06	6SL3200-6AE12-2BH0	G120P-0.75/32B
1.1	73 x 202 x 288	4.06	6SL3200-6AE13-1BH0	G120P-1.1/32B
1.5	73 x 202 x 288	4.06	6SL3200-6AE14-1BH0	G120P-1.5/32B
2.2	73 x 202 x 288	4.06	6SL3200-6AE15-8BH0	G120P-2.2/32B
3	73 x 202 x 288	4.06	6SL3200-6AE17-7BH0	G120P-3/32B
4	100 x 297 x 308	7.71	6SL3200-6AE21-0BH0	G120P-4/32B
5.5	100 x 297 x 308	7.71	6SL3200-6AE21-3BH0	G120P-5.5/32B
7.5	100 x 297 x 308	7.71	6SL3200-6AE21-8BH0	G120P-7.5/32B
11	140 x 359 x 318	13.11	6SL3200-6AE22-6BH0	G120P-11/32B
15	140 x 359 x 318	13.11	6SL3200-6AE23-2BH0	G120P-15/32B
18.5	140 x 359 x 318	13.11	6SL3200-6AE23-8BH0	G120P-18.5/32B
22	375 x 512 x 262	21.5	6SL3200-6AE24-5BH0	G120P-22/32B
30	375 x 512 x 262	21.5	6SL3200-6AE26-0BH0	G120P-30/32B
37	385 x 635 x 262	34.3	6SL3200-6AE27-5BH0	G120P-37/32B
45	385 x 635 x 262	34.3	6SL3200-6AE28-8BH0	G120P-45/32B
55	500 x 934 x 374	70.6	6SL3200-6AE31-1BH0	G120P-55/32B
75	500 x 934 x 374	70.6	6SL3200-6AE31-4BH0	G120P-75/32B

IP20: When using a screening kit for the Power Module the total height increases as follows: FSA: + 80 mm; FSB: + 78 mm; FSC: + 77 mm; FSD, FSE, FSF: + 123 mm
The depth increases when using a BOP-2 by +10mm and with an IOP +20mm

Range overview G120P.. IP20 with integrated EMC-Filter, class A (C2); 400V

Power output [kW]	Dimensions (W x H x D) [mm]	Weight [kg]	Stock No.	Product No.
0.37	73 x 196 x 223	2.31	6SL3200-6AE11-3AH0	G120P-0.37/32A
0.55	73 x 196 x 223	2.31	6SL3200-6AE11-7AH0	G120P-0.55/32A
0.75	73 x 196 x 223	2.31	6SL3200-6AE12-2AH0	G120P-0.75/32A
1.1	73 x 196 x 223	2.31	6SL3200-6AE13-1AH0	G120P-1.1/32A
1.5	73 x 196 x 223	2.31	6SL3200-6AE14-1AH0	G120P-1.5/32A
2.2	73 x 196 x 223	2.31	6SL3200-6AE15-8AH0	G120P-2.2/32A
3	73 x 196 x 223	2.31	6SL3200-6AE17-7AH0	G120P-3/32A
4	100 x 292 x 223	3.71	6SL3200-6AE21-0AH0	G120P-4/32A
5.5	100 x 292 x 223	3.71	6SL3200-6AE21-3AH0	G120P-5.5/32A
7.5	100 x 292 x 223	3.71	6SL3200-6AE21-8AH0	G120P-7.5/32A
11	140 x 355 x 223	5.81	6SL3200-6AE22-6AH0	G120P-11/32A
15	140 x 355 x 223	5.81	6SL3200-6AE23-2AH0	G120P-15/32A
18.5	140 x 355 x 223	5.81	6SL3200-6AE23-8AH0	G120P-18.5/32A
22	275 x 512 x 262	14	6SL3200-6AE24-5AH0	G120P-22/32A
30	275 x 512 x 262	14	6SL3200-6AE26-0AH0	G120P-30/32A
37	275 x 635 x 262	22	6SL3200-6AE27-5AH0	G120P-37/32A
45	275 x 635 x 262	22	6SL3200-6AE28-8AH0	G120P-45/32A
55	350 x 934 x 374	48	6SL3200-6AE31-1AH0	G120P-55/32A
75	350 x 934 x 374	48	6SL3200-6AE31-4AH0	G120P-75/32A

IP20: When using a screening kit for the Power Module the total height increases as follows: FSA: + 80 mm; FSB: + 78 mm; FSC: + 77 mm; FSD, FSE, FSF: + 123 mm
The depth increases when using a BOP-2 by +10mm and with an IOP +20mm

Available operator panels

Product Title	Data sheet	Stock No.	Product No.
G120P basic operator panel BOP-2, IP55	N5116	6SL3255-6AA00-4CA0	G120P-BOP-2
G120P intelligent operator panel IOP, IP54	N5116	6SL3255-6AA00-4JA0	G120P-IOP
G120P blanking cover, IP55		6SL3256-6BA00-0AA0	G120P-BCOVER

NEW PRODUCT

Accessories and spare parts

Product Title	Stock No.	Product No.
G120P Door mounting kit for IOP or BOP-2	6SL3256-6AP00-0JA0	G120P-DOOR-KIT
G120P Screening-Kit, PM230 IP20 FSD-FSE	6SL3262-1AD00-0DA0	G120P-Screen-FSDE
G120P Screening-Kit, PM230 IP20 FSF	6SL3262-1AF00-0DA0	G120P-Screen-FSF
Sinamics Micro Memory Card (MMC)	6SL3254-0AM00-0AA0	G120P-MMC-Card
G120P PC-Inverter Connection Kit-2	6SL3255-0AA00-2CA0	G120P-PC-Kit
STARTER Commissioning Tool for Sinamics and Micromaster Drives	6SL3072-0AA00-0AG0	G120P-Starter
G120P Control Unit, CanOpen	6SL3243-0BB30-1CA2	CU230P-2 CAN
G120P Control Unit, Profibus	6SL3243-0BB30-1PA2	CU230P-2 DP
G120P Control Unit, USS, Modb, BacNet	6SL3243-6BB30-1HA2	CU230P-2 BT
G120P CU230P-2 Screening Kit	6SL3264-1EA00-0FA0	G120P-CUScreen
G120P PM Fan IP20/IP55, external, FSA	6SL3200-0SF21-0AA0	G120P-FExtFSA
G120P PM Fan IP20/IP55, external, FSB	6SL3200-0SF22-0AA0	G120P-FExtFSB
G120P PM Fan IP20/IP55, external, FSC	6SL3200-0SF23-0AA0	G120P-FExtFSC
G120P PM Fan IP55, external, FSD-FSE	6SL3200-0SF24-0AA0	G120P-FExtFSDE-IP55
G120P PM Fan IP55, external, FSF	6SL3200-0SF26-0AA0	G120P-FExtFSF-IP55
G120P PM Fan IP55, external, FSD-FSE	6SL3200-0SF05-0AA0	G120P-FExtFSDE-IP20
G120P PM Fan IP55, external, FSF	6SL3200-0SF08-0AA0	G120P-FExtFSF-IP20
G120P PM Fan IP55, internal, FSA-FSC	6SL3200-0SF31-0AA0	G120P-FIntFSAC-IP55
G120P PM Fan IP55, internal, FSD-FSF	6SL3200-0SF32-0AA0	G120P-FIntFSDF-IP55
G120P mounting parts set, PM230, IP55, FSA	6SL3200-0SK02-0AA0	G120P-MSetFSA-IP55
G120P mounting parts set, PM230, IP55, FSB	6SL3200-0SK03-0AA0	G120P-MSetFSB-IP55
G120P mounting parts set, PM230, IP55, FSC	6SL3200-0SK04-0AA0	G120P-MSetFSC-IP55
G120P mounting parts set, PM230, IP55, FSE	6SL3200-0SK06-0AA0	G120P-MSetFSE-IP55
G120P mounting parts set, PM230, IP55, FSF	6SL3200-0SK07-0AA0	G120P-MSetFSF-IP55
G120P mounting parts set, PM230, IP55, FSD	6SL3200-0SK05-0AA0	G120P-MSetFSD-IP55
G120P Screening-Kit, PM230 IP20 FSA	6SL3266-1EA00-0KA0	G120P-Screen-FSA
G120P Screening-Kit, PM230 IP20 FSB	6SL3266-1EB00-0KA0	G120P-Screen-FSB
G120P Screening-Kit, PM230 IP20 FSC	6SL3266-1EC00-0KA0	G120P-Screen-FSC

Metering

Overview and selection tools	Overview of product details	10-2
Electronic heat cost allocators	Electronic heat cost allocators WHE50..	10-7
	Electronic heat cost allocators WHE57..	10-8
	Electronic heat cost allocators WHE55..	10-9
	Electronic heat cost allocators WHE56..	10-10
	Accessories and mounting material for WHE5..	10-11
Mechanical and electronic water meters	Mechanical water meters single-jet: WFK.. / WFW..	10-13
Impeller type heating/cooling energy meters	Single-jet: Single-jet: WFx4.. / WFM2.. / WFN2..	10-15
	Accessories for single-jet	10-19
Ultrasonic heat meters and heating/cooling energy meters	Ultrasonic energy meters UH50..	10-21
	Standard types with connecting thread UH50..	10-22
	Standard types with connecting thread UH50..	10-23
	Accessories for UH50..	10-24
Systems for remote readout	Automatic Meter Reading System (AMR 868 MHz)	10-27
	walk-by radio system	10-30
		10-31
M-Bus Metering System	For remote control via M-Bus: OZW1.. / WZC.. / AEW3..	10-32
Synergyr Control & Metering System	For control and energy cost allocation system: OZW30 / WRI.. / QAW..	10-36

Overview and selection tools
Overview

Heat cost allocators WHE5..

	1 sensor	2 sensors	Communication	Summer switch off	Effective date
WHE501-D29	■		none	■ [2]	30.09
WHE502-D10		■	none	■ [1]	31.12
WHE502-D29		■	none	■ [2]	30.09
WHE571-D29	■		IrDA	■ [2]	30.09
WHE572-D29		■	IrDA	■ [2]	30.09
WHE551-0000	■		Walk-by		31.12
WHE551-D291	■		Walk-by	■ [2]	30.09
WHE552-0000		■	Walk-by		31.12
WHE552-D100		■	Walk-by	■ [1]	31.12
WHE552-D291		■	Walk-by	■ [2]	30.09
WHE561-000	■		AMR		31.12
WHE561-D29	■		AMR	■ [2]	30.09
WHE562-000		■	AMR		31.12
WHE562-D10		■	AMR	■ [1]	31.12
WHE562-D29		■	AMR	■ [2]	30.09

[1] Beginning of summer: 01.06 - End of summer: 31.08

[2] Beginning of summer: 01.06 - End of summer: 30.09

Hot and cold water meters

	Type of meter	Nominal flow rate	Mounting length	Communication	Connection
WFK30.D080	Cold water up to 30° C	1.5 m³/h	80 mm	walk-by oder AMR [1]	G 3/4"
WFK30.D110	Cold water up to 30° C	1.5 m³/h	110 mm	walk-by oder AMR [1]	G 3/4"
WFW30.D080	Hot water up to 90° C	1.5 m³/h	80 mm	walk-by oder AMR [1]	G 3/4"
WFW30.D110	Hot water up to 90° C	1.5 m³/h	110 mm	walk-by oder AMR [1]	G 3/4"

[1] With add-on radio module: AMR (WFZ16.MO), walk-by(WFZ166.MO)

Heat and cooling energy meters

	Type of meter	Nominal flow rate	Communication	Power supply	Type	Connec-tion	Mounting length
WFM407.B113	Heat	0.6 m³/h	none	Battery [1]	Impeller meter	G 3/4"	110 mm
WFM21.B111	Heat	0.6 m³/h	M-Bus	Battery [1]	Impeller meter	G 3/4"	110 mm
WFM26.B111	Heat	0.6 m³/h	AMR	Battery [1]	Impeller meter	G 3/4"	110 mm
WFN21.B111	Combi	0.6 m³/h	M-Bus	Battery [1]	Impeller meter	G 3/4"	110 mm
WFN26.B111	Combi	0.6 m³/h	AMR	Battery [1]	Impeller meter	G 3/4"	110 mm
WFM407.D113	Heat	1.5 m³/h	none	Battery [1]	Impeller meter	G 3/4"	110 mm
WFM21.D11	Heat	1.5 m³/h	M-Bus	Battery [1]	Impeller meter	G 3/4"	110 mm
WFM26.D111	Heat	1.5 m³/h	AMR	Battery [1]	Impeller meter	G 3/4"	110 mm
WFN21.D111	Combi	1.5 m³/h	M-Bus	Battery [1]	Impeller meter	G 3/4"	110 mm
WFN26.D111	Combi	1.5 m³/h	AMR	Battery [1]	Impeller meter	G 3/4"	110 mm
WFM407.E133	Heat	2.5 m³/h	none	Battery [1]	Impeller meter	G 1"	130 mm
WFM21.E131	Heat	2.5 m³/h	M-Bus	Battery [1]	Impeller meter	G 1"	130 mm
WFM26.E131	Heat	2.5 m³/h	AMR	Battery [1]	Impeller meter	G 1"	130 mm
WFN21.E131	Combi	2.5 m³/h	M-Bus	Battery [1]	Impeller meter	G 1"	130 mm
WFN26.E131	Combi	2.5 m³/h	AMR	Battery [1]	Impeller meter	G 1"	130 mm

[1] Battery life > 10

Ultrasonic heat meters

	Type of meter	Nominal flow rate	Communication	Power supply	Type	Conn-ection	Mounting length
WSM506-0A	Heat	0.6 m³/h	none	Battery [1]	Ultrasonic meter	G 3/4"	110 mm
WSM506-0E	Heat	0.6 m³/h	none	Battery [2]	Ultrasonic meter	G 3/4"	110 mm
WSM515-0A	Heat	1.5 m³/h	none	Battery [1]	Ultrasonic meter	G 3/4"	110 mm
WSM515-0E	Heat	1.5 m³/h	none	Battery [2]	Ultrasonic meter	G 3/4"	110 mm
WSM525-0A	Heat	2.5 m³/h	none	Battery [1]	Ultrasonic meter	G 1"	130 mm
WSM525-0E	Heat	2.5 m³/h	none	Battery [2]	Ultrasonic meter	G 1"	130 mm
2WR605-MBE	Heat	0.6 m³/h	M-Bus	Battery [2]	Ultrasonic meter	G 3/4"	110 mm
2WR605-MBG	Heat	0.6 m³/h	M-Bus	AC/DC 12...24 V	Ultrasonic meter	G 3/4"	110 mm
2WR605-MHE	Heat	0.6 m³/h	M-Bus	Battery [2]	Ultrasonic meter	G 3/4"	110 mm
2WR605-MHG	Heat	0.6 m³/h	M-Bus	AC/DC 12...24 V	Ultrasonic meter	G 3/4"	110 mm
2WR621-MBE	Heat	1.5 m³/h	M-Bus	Battery [2]	Ultrasonic meter	G 3/4"	110 mm
2WR621-MBG	Heat	1.5 m³/h	M-Bus	AC/DC 12...24 V	Ultrasonic meter	G 3/4"	110 mm
2WR621-MHE	Heat	1.5 m³/h	M-Bus	Battery [2]	Ultrasonic meter	G 3/4"	110 mm
2WR621-MHG	Heat	1.5 m³/h	M-Bus	AC/DC 12...24 V	Ultrasonic meter	G 3/4"	110 mm
2WR636-MBE	Heat	2.5 m³/h	M-Bus	Battery [2]	Ultrasonic meter	G 1"	130 mm
2WR636-MBG	Heat	2.5 m³/h	M-Bus	AC/DC 12...24 V	Ultrasonic meter	G 1"	130 mm
2WR636-MHE	Heat	2.5 m³/h	M-Bus	Battery [2]	Ultrasonic meter	G 1"	130 mm
2WR636-MHG	Heat	2.5 m³/h	M-Bus	AC/DC 12...24 V	Ultrasonic meter	G 1"	130 mm
UH50-A05-00	Heat	0.6 m³/h	none [3]	none [3]	Ultrasonic meter	G 3/4"	110 mm
UH50-C05-00	Combi	0.6 m³/h	none [3]	none [3]	Ultrasonic meter	G 3/4"	110 mm
UH50-A21-00	Heat	1.5 m³/h	none [3]	none [3]	Ultrasonic meter	G 3/4"	110 mm
UH50-C21-00	Combi	1.5 m³/h	none [3]	none [3]	Ultrasonic meter	G 3/4"	110 mm
UH50-A36-00	Heat	2.5 m³/h	none [3]	none [3]	Ultrasonic meter	G 1"	130 mm
UH50-C36-00	Combi	2.5 m³/h	none [3]	none [3]	Ultrasonic meter	G 1"	130 mm
UH50-A45-00	Heat	3.5 m³/h	none [3]	none [3]	Ultrasonic meter	G 1 1/4"	260 mm
UH50-C45-00	Combi	3.5 m³/h	none [3]	none [3]	Ultrasonic meter	G 1 1/4"	260 mm
UH50-A50-00	Heat	6.0 m³/h	none [3]	none [3]	Ultrasonic meter	G 1 1/4"	260 mm
UH50-C50-00	Combi	6.0 m³/h	none [3]	none [3]	Ultrasonic meter	G 1 1/4"	260 mm
UH50-A61-00	Heat	10 m³/h	none [3]	none [3]	Ultrasonic meter	DN 40	300 mm
UH50-C61-00	Combi	10 m³/h	none [3]	none [3]	Ultrasonic meter	DN 40	300 mm
UH50-A65-00	Heat	15 m³/h	none [3]	none [3]	Ultrasonic meter	DN 50	270 mm
UH50-C65-00	Combi	15 m³/h	none [3]	none [3]	Ultrasonic meter	DN 50	270 mm
UH50-A70-00	Heat	25 m³/h	none [3]	none [3]	Ultrasonic meter	DN 65	300 mm
UH50-C70-00	Combi	25 m³/h	none [3]	none [3]	Ultrasonic meter	DN 65	300 mm
UH50-A74-00	Heat	40 m³/h	none [3]	none [3]	Ultrasonic meter	DN 80	300 mm
UH50-C74-00	Combi	40 m³/h	none [3]	none [3]	Ultrasonic meter	DN 80	300 mm
UH50-A83-00	Heat	60 m³/h	none [3]	none [3]	Ultrasonic meter	DN 100	360 mm
UH50-C83-00	Combi	60 m³/h	none [3]	none [3]	Ultrasonic meter	DN 100	360 mm

[1] Battery life: 6 years

[2] Battery life: 11 Jahre

[3] Various communication and power supply modules available

Overview standard systems

Communication	M-Bus (Metering bus)	SYNERGYR® Bus
Standard systems for:	**District heating and meter readout**	**Control and energy cost allocation**
Communication central unit	OZW10 OZW111	OZW30
Software	ACS790	ACS30
Service Tool		AZW30 / ACS30
Heating controllers	■ RVD2..-District heating controllers	■ RVL2..- Heating controllers ■ RVP3..- Heating controllers ■ RVD2..- Heating controllers
Room controllers		WRI80 Regel- und Wärmezähler Interface
Energy meters	Impulse meter (via impulse adapter) Heat cost allocator (via network node) Ultrasonic and impeller heat meters	Impulse meter (via impulse adapter) Controller and heat meter interface Ultrasonic and impeller heat meters

M-Bus system

Standard system for district heating and meter (M-Bus)
The M-Bus central unit is used for consumption cost billing and remote monitoring of community and district heating systems as well as multi-family houses.

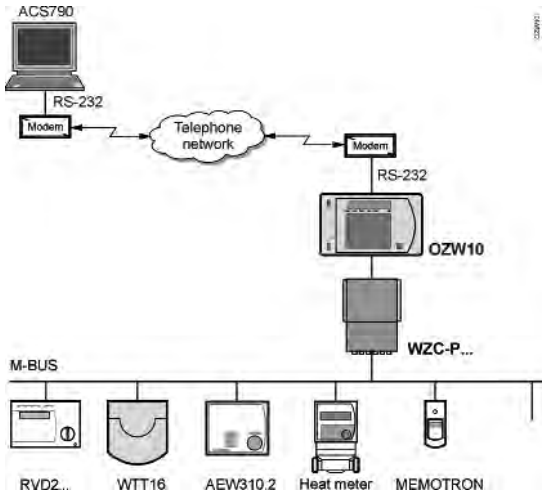

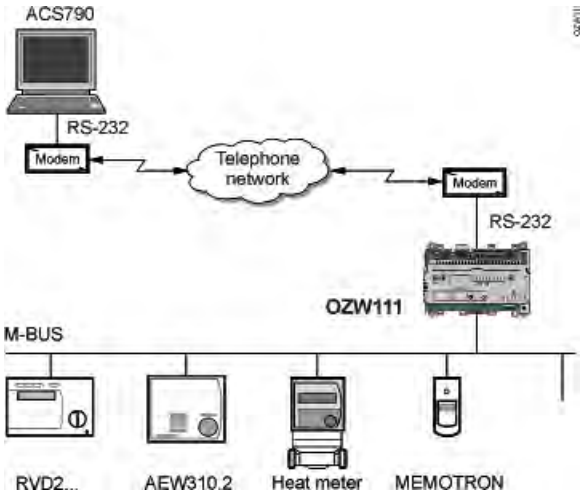

Communication central units	OZW10	OZW111
No. of communication devices	Up to 700	5
Plant operation		
ACS software	Yes	Yes
Interface	RS232	RS232
Alarming		
No. of management stations	2	2
ACS alarm via PC	Yes	Yes
Consumption data		
Data storage	Yes	No
Read out via RS-232	Yes	Yes
Read out via memory card	Yes	No
Digital alarm input (potential free)	4	2
Alarm relay	1	-
Local device operation	LCD / Operating cards / Button	Button / Switch
Bus power supply	No [1]	Yes
M-Bus support		
Adressing	Primary and secondary	Primary and secondary
Baud rate	300, 2400, 9600	300, 2400
General device data		
Operating voltage	AC 24 V	AC 230 V ±10 %
Frequency	50/60 Hz	50/60 Hz
Power consumption	8 VA	5 VA
Degree of protection	IP40	IP20 [2]

[1] Bus power supply / Singal converter WZC-P60 or WZC-P250 necessary. Using the bus power supply WZC-P250 a network extension with repeater WZC-R250 is possible.
[2] IP30 with terminal covers

SYNERGYR® system

Standard system for control and energy cost SYNERGYR®
Heat metering and billing system with integrated room temperature control, especially for new apartment blocks that use horizontal piping. Central acquisition of water and heat at the heating inlet to the apartment.

Following versions are available:
- Comfort: Heat metering system with individual room control.
- Eco: Heat metering system with integrated reference room control.
- Standard: Proper heat metering system without room temperature control.

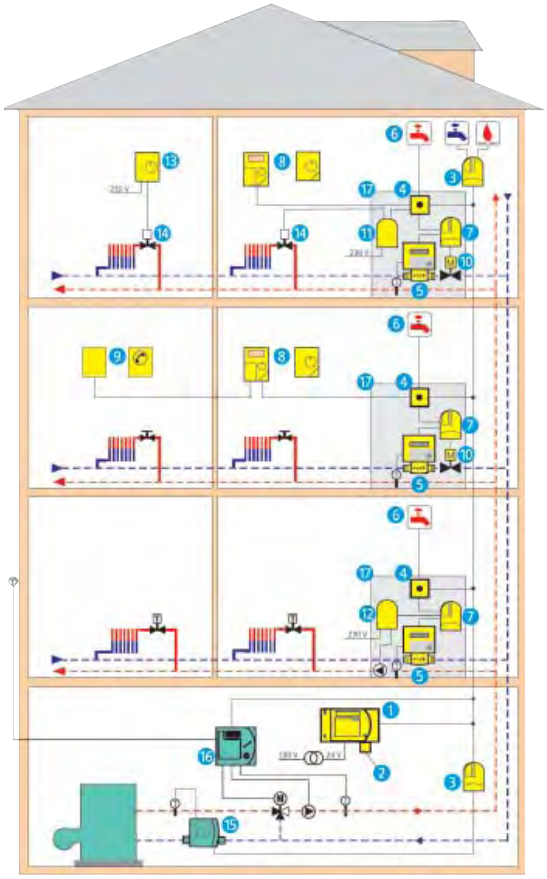

1. Central unit OZW30
2. Memory card ALC30...
3. Pulse adapter AEW2.1
4. Conduit box ALW84
5. Heat meter WFQ21... / WFM21...
6. Consumption meter
7. Control and heat meter interface WRI80
8. Room unit QAW10 or QAW20
9. Remote sensor QAW44 or Teleswitch
10. Valve with actuator VVP47 with SSP81 or VVP45 with SS.81
11. Control module AEK84 for radiator valve
12. Control module AEK84 for apartment pump
13. Room thermostat RAA... / RAA0...
14. Electrothermal actuator STA71
15. Group heat meter with pulse output
16. Heating controller
17. Cabinet / cable riser

Communication central units	OZW30
No. of communication devices	Up to 96 (user units) and 6 meters (general)
Digital inputs	2 as counter or alarm inputs 2 as fixed alarm inputs
Digital alarm relais	1
Local device operation	LCD, Operating cards
Bus power supply	Yes
Alarming	
No. of management stations	2
ACS alarm via PC	Yes
Consumption data	
Data storage	Yes
Read out via RS-232	Yes
Read out via memory card	Yes
Data exchange	With LPB controllers
General devices data	
Operating voltage	AC 24 V
Frequency	50/60 Hz
Power consumption	10 VA
Degree of protection	IP40

Electronic heat cost allocators

WHE50..

Device for heat cost allocation by acquiring the amount of heat emitted by radiators.
WHE50.. heat cost allocators without communication interface must be visually read on site and the readings must be manually written down. They are especially suited for basic plants that require no complex data evaluations or no very fast readout.

- Programming is performed with the ACT50 software.
- Simply extendable with remote sensor.
- All types are supplied without mounting plate (heat conductor).

Data sheet	N2886
Voltage supply	Lithium battery
Battery life	>10 Years
Operating voltage	DC 3 V
Display	LCD
Dimensions (W x H x D)	40 x 102 x 31 mm

Heat cost allocators WHE50.. without communication interface

Product Title	Stock No.	Product No.
Electronic heat cost allocator with watchdog timer, Single-sensor, Summer switch-off: 06/01 – 09/30, due date 09/30	S55562-F100	WHE501-D29
Electronic heat cost allocator with watchdog timer, Double sensor, Summer switch-off: 06/01 – 08/31, due date 12/31	S55562-F101	WHE502-D10
Electronic heat cost allocator with watchdog timer, Double sensor, Summer switch-off: 06/01 – 09/30, due date 09/30	S55562-F102	WHE502-D29

NEW PRODUCT

WHE57..

Electronic heat cost allocators with infrared interface

Device for heat cost allocation by acquiring the amount of heat emitted by radiators.
WHE57.. heat cost allocators with optical close-range interface must be read on site. The readings can be made semi-automatically by means of the IrDA reading head.

- Programming is performed with the ACT50 software.
- Simply extendable with remote sensor.
- All types are supplied without mounting plate (heat conductor).

Data sheet	N2886
Voltage supply	Lithium battery
Battery life	>10 Years
Operating voltage	DC 3 V
Display	LCD
Dimensions (W x H x D)	40 x 102 x 31 mm

Heat cost allocators WHE57.. with infrared interface

Product Title	Stock No.	Product No.
Electronic heat cost allocator with infrared interface, Single-sensor, Summer switch-off: 06/01 – 09/30, due date 09/30	S55562-F113	WHE571-D29
Electronic heat cost allocator with infrared interface, Double sensor, Summer switch-off: 06/01 – 09/30, due date 09/30	S55562-F114	WHE572-D29

Electronic heat cost allocators with walk-by radio interface

WHE55..

Device for heat cost allocation by acquiring the amount of heat emitted by radiators.
The heat cost allocators featuring a walk-by radio interface are read locally via RF (radio frequency 868 MHz). The allocators send the consumption data at a predetermined point in time. Using the mobile data logger, the person making the readout collects the radio telegrams.

- Programming is performed with the ACT50 software.
- Simply extendable with remote sensor.
- All types are supplied without mounting plate (heat conductor).

Data sheet	N2886
Voltage supply	Lithium battery
Battery life	>10 Years
Operating voltage	DC 3 V
Display	LCD
Dimensions (W x H x D)	40 x 102 x 31 mm

Heat cost allocators WHE55.. with walk-by radio interface

Product Title	Stock No.	Product No.
Electronic heat cost allocator with walk-by radio interface, Single-sensor, due date 12/31, type of readout annual	S55562-F103	WHE551-0000
Electronic heat cost allocator with walk-by radio interface, watchdog timer, Single-sensor, Summer switch-off: 06/01 – 09/30, due date 09/30, type of readout monthly	S55562-F104	WHE551-D291
Electronic heat cost allocator with walk-by radio interface, Double sensor, due date 12/31, type of readout annual	S55562-F105	WHE552-0000
Electronic heat cost allocator with walk-by radio interface, watchdog timer, Double sensor, Summer switch-off: 06/01 – 08/31, due date 12/31, type of readout annual	S55562-F106	WHE552-D100
Electronic heat cost allocator with walk-by radio interface, watchdog timer, Double sensor, Summer switch-off: 06/01 – 09/30, due date 09/30, type of readout monthly	S55562-F107	WHE552-D291

NEW PRODUCT

Electronic heat cost allocators WHE56..

WHE56..

Electronic heat cost allocators with AMR radio interface

Device for heat cost allocation by acquiring the amount of heat emitted by radiators.
The WHE56.. heat cost allocators are read out via RF (radio frequency 868 MHz).
The devices send the current consumption data in cycles to the network nodes. These nodes automatically collect and store the data from all integrated heat cost allocators. Customers can read all consumption data of plants from a remote location.

- Programming is performed with the ACT50 software.
- Simply extendable with remote sensor.
- All types are supplied without mounting plate (heat conductor).

Data sheet	N2886
Voltage supply	Lithium battery
Battery life	>10 Years
Operating voltage	DC 3 V
Display	LCD
Dimensions (W x H x D)	40 x 102 x 31 mm

Heat cost allocators WHE56.. with AMR radio interface

Product Title	Stock No.	Product No.
Electronic heat cost allocator with AMR radio interface, Single-sensor, due date 12/31	S55562-F108	WHE561-000
Electronic heat cost allocator with AMR radio interface, watchdog timer, Single-sensor, Summer switch-off: 06/01 – 09/30, due date 09/30	S55562-F109	WHE561-D29
Electronic heat cost allocator with AMR radio interface, Double sensor, due date 12/31	S55562-F110	WHE562-000
Electronic heat cost allocator with AMR radio interface, watchdog timer, Double sensor, Summer switch-off: 06/01 – 08/31, due date 12/31	S55562-F111	WHE562-D10
Electronic heat cost allocator with AMR radio interface, watchdog timer, Double sensor, Summer switch-off: 06/01 – 09/30, due date 09/30	S55562-F112	WHE562-D29

Accessories for WHE5.. – parts for fixing

Product Title	Packaging unit	Stock No.	Product No.
Mounting plate (P3)	50 pieces	S55563-F115	FKA0017
Threaded hoop (pipe 18...30 mm)	10 pieces	JXF:FKT0014	FKT0014
Threaded hoop (pipe up to 17 mm)	10 pieces	JXF:FKT0004	FKT0004
Shank nut M3 x 3 mm	100 pieces	JXF:FNM0002	FNM0002
Shank nut M3 x 6 mm	100 pieces	JXF:FNM0003	FNM0003
Shank nut M3 x 9.5 mm	100 pieces	JXF:FNM0001	FNM0001
Clamping sleeve special radiator	10 pieces	JXF:FKM0002	FKM0002
Clamping bracket (pipes TE 36 mm)	10 pieces	JXF:FKT0015	FKT0015
Clamping bracket (pipes TE 46 mm)	10 pieces	JXF:FKT0016	FKT0016
Clamping bracket shortened	10 pieces	JXF:FKT0009	FKT0009
Clamping bracket trapezoidal 35 mm	10 pieces	JXF:FKT0018	FKT0018
Clamping bracket trapezoidal 50 mm	10 pieces	JXF:FKT0019	FKT0019
Clamping bracket trapezoidal 65 mm	10 pieces	JXF:FKT0020	FKT0020
Expanding bracket of lamella-type radiator	10 pieces	JXF:FKA0004	FKA0004
Square bolt 4.5 mm with cross pin	10 pieces	JXF:BOZ4002	BOZ4002
Square bolt 6 mm with cross pin	10 pieces	JXF:BOZ4003	BOZ4003
Square bolt 12 mm with cross pin	10 pieces	JXF:BOZ4004	BOZ4004

Accessories for WHE5.. – parts for mounting

Product Title	Packaging unit	Stock No.	Product No.
Spacer sleeve	10 pieces	JXF:FKT0010	FKT0010
Spacer	10 pieces	JXF:FKA0013	FKA0013
Threaded bushing	10 pieces	JXF:FKA0012	FKA0012
Clamping piece (threaded hoop 17 mm)	10 pieces	JXF:FKA0003	FKA0003
Clamping piece (threaded hoop 18...30 mm)	10 pieces	JXF:FKA0008	FKA0008
Installation plate for remote sensor	10 pieces	JXF:FKA0009	FKA0009
Mounting plate wide	25 pieces	JXF:FKA0022	FKA0022
Sensor housing	50 pieces	JXF:FKK0029	FKK0029
Safety cap for sensor housing	50 pieces	JXF:FKK0045	FKK0045
Wall bracket (P3)	10 pieces	JXF:FKK0044	FKK0044
Contact screw	10 pieces	JXF:FKA0010	FKA0010
Contact screw long	10 pieces	JXF:FKA0011	FKA0011

NEW PRODUCT

Electronic heat cost allocators
Accessories and mounting material for WHE5..

Accessories for WHE5.. – standard parts

Product Title	Packaging unit	Stock No.	Product No.
Self-tapping screw B 2.9 x 13 mm	500 pieces	JXF:FNR0008	FNR0008
Screw B 3.9 x 45 mm	500 pieces	JXF:FNR0007	FNR0007
Cross-slot screw M4 x 30 mm	500 pieces	JXF:FNR0003	FNR0003
Cross-slot screw M4 x 40 mm	500 pieces	JXF:FNR0004	FNR0004
Cross-slot screw M4 x 50 mm	500 pieces	JXF:FNR0005	FNR0005
Cross-slot screw M4 x 70 mm	500 pieces	JXF:FNR0006	FNR0006
Welding stud M3 x 8 mm	1000 pieces	JXF:FKT0013	FKT0013
Welding stud M3 x 12 mm	1000 pieces	JXF:FKT0011	FKT0011
Welding stud M3 x 15 mm	1000 pieces	JXF:FKT0012	FKT0012
Hexagon nut M4	1000 pieces	JXF:FNM0004	FNM0004
Self-locking nut with serrated bearing M3	1000 pieces	JXF:FNM0005	FNM0005

Miscellaneous accessories for WHE5..

Product Title	Packaging unit	Stock No.	Product No.
Dowel 6 mm	100 pieces	JXF:FNU0001	FNU0001
Remote sensor 1.5 m	10 pieces	JXF:BBV4003	BBV4003
Remote sensor 2.5 m	10 pieces	JXF:BBV4004	BBV4004
Remote sensor 5 m	10 pieces	JXF:BBV4005	BBV4005
Lead seal blue	100 pieces	JXF:FKK0041	FKK0041
Cable duct white	10 m	JXF:FOZ0001	FOZ0001
Snap-on panel	50 pieces	JXF:FKK0034	FKK0034
Installation template	1 piece	JXF:HCAIP001001	HCAIP001001
Installation aid (convector)	1 piece	JXF:FKT0017	FKT0017
ERGO universal instant glue 3g	1 piece	JXF:FSS0007	FSS0007

Programming accessories for WHE5..

Product Title	Packaging unit	Stock No.	Product No.
Infrared read head with USB interface	1 piece	JXF:WFZ.IRDA-USB	WFZ.IRDA-USB
Programming adapter	1 piece	JXF:HCAPH001001	HCAPH001001

Mechanical water meter single-jet, wall mounted (module compatible)

WFK30.. / WFW30..

Mechanical single-jet impeller meter for measuring the consumption of cold (WFK30..) or hot water (WFW30..). Display of cumulated consumption. Versions without remote reading output. Body made of brass, dry-runner with magnetic transmission and pivotable totalizer. All water meters WFK30.. and WFW30.. can be retrofitted with electronic communication modules for AMR (WFZ16.MO) and walk-by (WFZ166.MO) readout. These meters are MID conform.
Metrological class, horizontal mounting of body = R80 (class B).
Metrological class, vertical mounting of body = R40 (class A).
A permanent flowrate Q_3 of 2.5 m³/h corresponds to a nominal flow Q_N of 1.5 m³/h.

Mechanical water meter to acquire the water consumption in domestic water systems in residential or non-residential buildings and in water supply systems.

Data sheet	N5326
PN class	PN 16
Pressure drop	250 mbar

Range overview single-jet water meters without remote reading output

Nominal flow rate [m³/h]	Mounting length [mm]	Connecting thread ["]	Max. water temperature [°C]	Stock No.	Product No.
1.5	80	G ¾	30	S55560-F100	**WFK30.D080**
1.5	110	G ¾	30	S55560-F101	**WFK30.D110**
1.5	80	G ¾	90	S55560-F102	**WFW30.D080**
1.5	110	G ¾	90	S55560-F103	**WFW30.D110**

Mounting material domestic water meters single-jet

Product Title	Stock No.	Product No.
Mounting kit for washstand water meter	BPZ:WFZ.W	**WFZ.W**
Mounting kit for tap water meter	BPZ:WFZ.Z	**WFZ.Z**
Extension 80 mm / thread ¾" B on 110 mm / G 1" B, incl. Seals	JXF:WZM-V110	**WZM-V110**
Extension from 110 mm G¾" to 130 mm G¾", pair with seals	BPZ:WZM-V130	**WZM-V130**

Spacer and fittings

Product Title	Stock No.	Product No.
Spacer 80 mm	BPZ:WFZ.R80	**WFZ.R80**
Spacer 110 mm	BPZ:WFZ.R110	**WFZ.R110**
Pair of fittings for ½" AG, union nut ¾"	BPZ:WFZ.R2	**WFZ.R2**

Programming tools and software for electronic water meters with radio adapter

Product Title	Stock No.	Product No.
Parameterizing and diagnostics software	BPZ:ACT20	**ACT20**
Programming stick	BPZ:WFZ.PS	**WFZ.PS**
USB tool set	BPZ:WHZ3.USB	**WHZ3.USB**
PC connecting cable	BPZ:WFZ.MBM	**WFZ.MBM**
Special Port Converter RS232 to USB	JXF:WFZ.USB-1	**WFZ.USB-1**

Impeller type heating/cooling energy meters
Single-jet: WFx4.. / WFM2.. / WFN2..

WFx4..

Electronic heat meter wall mounting

The heat meters are electronic, battery-supplied meters for determining the heat consumption. They acquire the flow acquisition without generating a magnetic field and use highly accurate temperature sensors. They are used in residential and commercial buildings for acquiring heat energy consumption. The meter operates according to the single-jet measuring principle. The water flows against an impeller; its speed is scanned electronically and without a magnetic field. The temperatures in the flow and return are measured with immersion sensors Pt1000. The heat meter is equipped either for installing in the return or in the flow. The flow is continously measured in the calculator and at least once every minute the flow and return temperature.
The heat meter has a scrolling display with the following values and variables:
- Cumulative heat consumption since starting up the heat meter
- Segment test
- Due date
- Cumulative water consumption up to last due date
- Current return temperature

With the aid of the parameterization tools the following display options can be activated:
- Due date (only if due date and cut off date are different)
- Control number
- Current flow
- Temperature difference
- Error display

Data sheet	N5331
Measurement accuracy	class 3 per EN 1434
PN class	PN 10
Measuring range, temperature	15...90 °C
Sensing element, temperature	PT1000
Battery life	10 years
Min. temperature differential	3 K

Range overview heat meters single-jet - return installation

Nominal flow rate [m³/h]	Mounting length [mm]	Connecting thread ["]	Cable length, sensor [m]	Sensor	Return sensor integrated	Stock No.	Product No.
0.6	110	G ¾	1.5	Direct immer-sion	yes	S55561-F162	**WFM407.B113**
1.5	110	G ¾	1.5	Direct immer-sion	yes	S55561-F163	**WFM407.D113**
2.5	130	G 1	1.5	Direct immer-sion	yes	S55561-F164	**WFM407.E133**

Electronic heat meter, wall mounted

WFM2..

The heat meters are electronic dry-runners. They acquire the flow acquisition without generating a magnetic field and use highly accurate temperature sensors. They are used in residential and commercial buildings for acquiring heat or cooling energy consumption. Day by day they transmit the current measured values and consumption on the set day to the associated data collectors.The heat meters are available as single-jet or measuring cell models in different sizes, enabling them to be installed on all types of standard plant. The tenant can see his individual consumption on a large, easy-to-read display. The built-in lithium battery powers the device for a period of time exceeding the calibration period.Data transmission via M-bus, pulse, or the AMR remote meter readout system.The heat meter has 3 display levels which show the following values and variables:

- Cumulated heat consumption since the heat meter was first installed
- Cumulated heat consumption since the last set day
- Segment test
- Current heat output- Current flow rate
- Current flow temperature
- Current return temperature
- Current temperature differential
- Heat meter's number of operating hours since it was first installed
- Set day and set month
- Stored heat consumption of previous year
- Stored heat consumption of the last 13 months
- Verification code
- Indication of errors
- Cumulated volume since the heat meter was first installed

The units displayed are ?C or K, kWh (or GJ on request), m³/h, kW and hours.Standard display is the cumulated heat consumption.

Data sheet	N5333
Measurement accuracy	Class 3 as per EN 1434
PN class	PN 10
Measuring range, temperature	1...90 °C
Min. temperature differential	3 K
Sensing element, temperature	Pt 500
Battery life	8 years

Electronic heat meters, wall mounting, M-Bus, 5.0 mm sensor

Nominal flow rate [m³/h]	Mounting length [mm]	Connecting thread ["]	Cable length, sensor [m]	Sensor	Return sensor integrated	Stock No.	Product No.
0.6	110	G ¾	1.5	Direct immersion	yes	S55561-F165	**WFM21.B111**
1.5	110	G ¾	1.5	Direct immersion	yes	S55561-F166	**WFM21.D111**
2.5	130	G 1	1.5	Direct immersion	yes	S55561-F167	**WFM21.E131**

Electronic heat meters, wall mounting, for AMR 868 MHz; 5.0 mm sensor

Nominal flow rate [m³/h]	Mounting length [mm]	Connecting thread ["]	Cable length, sensor [m]	Sensor	Return sensor integrated	Stock No.	Product No.
0.6	110	G ¾	1.5	Direct immersion	yes	S55561-F168	**WFM26.B111**
1.5	110	G ¾	1.5	Direct immersion	yes	S55561-F169	**WFM26.D111**
2.5	130	G 1	1.5	Direct immersion	yes	S55561-F170	**WFM26.E131**

WFN2..

Electronic heat and cooling energy meter, wall mounted

The heat / cooling energy meters are electronic dry-runners. They acquire the flow without generating a magnetic field and use highly accurate temperature sensors. They are used in residential and commercial buildings for acquiring heat or cooling energy consumption. Day by day they transmit the current measured values and consumption on the set day to the associated data collectors. The heat / cooling energy meters are available as single-jet or measuring cell models in different sizes, enabling them to be installed on all types of standard plant (calculator removable, cable length 1,5 m). The tenant can see his individual consumption on a large, easy-to-read display. The built-in lithium battery powers the device for a period of time exceeding the calibration period. Data transmission via M-bus, pulse, or the AMR remote meter readout system.
The heat meter has 3 display levels which show the following values and variables:
- Cumulated heat consumption since the meter was first installed
- Cumulated heat consumption since the last set day
- Segment test
- Current heat output
- Current flow rate
- Current flow temperature
- Current return temperature
- Current temperature differential
- Heat meter's number of operating hours since it was first installed
- Set day and set month
- Stored heat consumption of previous year
- Stored heat consumption of the last 13 months
- Verification code
- Indication of errors
- Cumulated cooling energy comsumption since the meter was first installed

The units displayed are °C or K, kWh (or GJ on request), m³/h, kW, and hours.
The standard display shows the cumulated heat consumption.

Data sheet	N5338
Measurement accuracy	Class 3 as per EN 1434
PN class	PN 10
Measuring range, temperature	1...90 °C
Min. temperature differential	Cooling: 0.6 K Heat: 3 K
Sensing element, temperature	Pt 500
Battery life	8 years

10

Range overview single-jet heat and cooling energy meters with M-Bus communication

Nominal flow rate [m³/h]	Mounting length [mm]	Connecting thread ["]	Cable length, sensor [m]	Sensor	Return sensor integrated	Stock No.	Product No.
0.6	110	G ¾	1.5	Direct immersion	yes	S55561-F171	**WFN21.B111**
1.5	110	G ¾	1.5	Direct immersion	yes	S55561-F172	**WFN21.D111**
2.5	130	G 1	1.5	Direct immersion	yes	S55561-F173	**WFN21.E131**

Range overview single-jet heat and cooling energy meters AMR 868 MHz

Nominal flow rate [m³/h]	Mounting length [mm]	Connecting thread ["]	Cable length, sensor [m]	Sensor	Return sensor integrated	Stock No.	Product No.
0.6	110	G ¾	1.5	Direct immersion	yes	S55561-F174	**WFN26.B111**
1.5	110	G ¾	1.5	Direct immersion	yes	S55561-F175	**WFN26.D111**
2.5	130	G 1	1.5	Direct immersion	yes	S55561-F176	**WFN26.E131**

Impeller type heating/cooling energy meters
Accessories for single-jet

Mounting kit for heat meter

Product Title	Stock No.	Product No.
Mounting kit for 110 mm mounting length	BPZ:WFZ.E110-I	**WFZ.E110-I**
Mounting kit for 110 mm mounting length	BPZ:WFZ.E110G3-I	**WFZ.E110G3-I**
Mounting kit for 130 mm mounting length	BPZ:WFZ.E130-I	**WFZ.E130-I**
Mounting kit for 130 mm mounting length	BPZ:WFZ.E130G1-I	**WFZ.E130G1-I**

Mounting kit for heat meter with T-piece

Product Title	Stock No.	Product No.
Mounting kit for 110 mm mounting length	BPZ:WFZ.E110-IT	**WFZ.E110-IT**
Mounting kit for 110 mm mounting length	BPZ:WFZ.E110G3-IT	**WFZ.E110G3-IT**
Mounting kit for 130 mm mounting length	BPZ:WFZ.E130-IT	**WFZ.E130-IT**
Mounting kit for 130 mm mounting length	BPZ:WFZ.E130G1-IT	**WFZ.E130G1-IT**

Ball valves for heat meters

Product Title	Stock No.	Product No.
Ball valve, internal thread ½" with sensor accomodation	BPZ:WFZ.K15	**WFZ.K15**
Ball valve	BPZ:WFZ.K16	**WFZ.K16**
Ball valve	BPZ:WFZ.K17	**WFZ.K17**
Ball valve, internal thread ¾" with sensor accomodation	BPZ:WFZ.K18	**WFZ.K18**
Ball valve, internal thread 1" with sensor accomodation	BPZ:WFZ.K22	**WFZ.K22**

T-piece for sensor mounting

Product Title	Stock No.	Product No.
T-piece for flow sensor, IG ½" and adapter	BPZ:WFZ.T16	**WFZ.T16**
T-piece for flow sensor, IG ¾" and adapter	BPZ:WFZ.T19	**WFZ.T19**
T-piece for flow sensor, IG 1" and adapter	BPZ:WFZ.T22	**WFZ.T22**

Spacer and fittings

Product Title	Stock No.	Product No.
Spacer 110 mm	BPZ:WFZ.R110	**WFZ.R110**
Spacer 110 mm, externally threaded 1"	BPZ:WFZ.R110-1	**WFZ.R110-1**
Spacer 1" x 130 mm	BPZ:WFZ.R130	**WFZ.R130**
Pair of fittings for ½" AG, union nut ¾"	BPZ:WFZ.R2	**WFZ.R2**
Pair of fittings for ¾" AG, union nut 1"	BPZ:WFZ.R2-1	**WFZ.R2-1**

Programming tools and software for heat meters based on PC

Product Title	Stock No.	Product No.
Parameterizing and diagnostics software	BPZ:ACT20	**ACT20**
USB tool set	BPZ:WHZ3.USB	**WHZ3.USB**
PC connecting cable	BPZ:WFZ.MBM	**WFZ.MBM**
M-bus connection kit	BPZ:WFZ.MBUSSET	**WFZ.MBUSSET**
Special Port Converter RS232 to USB	JXF:WFZ.USB-1	**WFZ.USB-1**

UH50..

SONOHEAT® ultrasonic heat meters

The heat meter SONOHEAT® UH50 is the successor of the SONOHEAT® 2WR5.
SONOHEAT® UH50 are heat meters used for acquiring the amount of thermal energy exchanged in a heat exchanger circuit using water.
SONOHEAT® UH50 heat meters acquire the volumetric flow statically using the ultrasonic measuring principle. They excel in high measuring accuracy, no wear and tear, and stable long-term characteristics
SONOHEAT® UH50 heat meters are conform with the European MID (directive 2004/22/EG, MI-004) and approved to EN 1434.

The processor performs all measuring and storage functions required for practical operation. These are the following functions:

- Acquisition of the amount of heat with high measuring stability and defined overload characteristics
- Calculation and storage of maximum values
- Storage of billing-related data on a yearly and monthly set day
- Acquisition of tariff-dependent consumption
- Storage of 60 monthly values including cumulated energy, cumulated volume and tariff register
- Identification of faults
- Display of values and parameters (with selectable scope of display) and faults
- Test and service functions
- Logbook
- Datalogger (optional) for archiving of data
- Two slots and several retrofit modules are available for the following extra functions:
  - Pulse module with two channels
  - Pulse module for fast pulses for controlling the controller
  - Current loop output for "front door reading" according to IEC 61107
  - M-Bus module with 2 pulse inputs
  - Analog module
  - Radio module
- Mains- or battery-powered (optional). SONOHEAT® UH50 heat meters excel in extremely low power consumption.
- Readout, testing and service can take place via the built-in optical interface which conforms to EN 61107.
- Operation of the processor is assigned to several levels with different access rights.

The volume measurement units are made out of metal with thread or flange connecting for nominal pressure PN 16 and PN 25.
Available are nominal flow rates from 0.6 to 60 m³/h and mounting lengths from 110 to 360 mm.

Data sheet	UH 106-000
Measurement accuracy	EN 1434 class 2 or 3
Temperature range electronic unit	2...180 °C
Temperature range volume measuring section	10...130 °C (150 °C, max. 2000 h)
Mounting location	return or flow
Mounting position	any

10

Range overview with connecting thread

Nominal flow rate [m³/h]	Connecting thread ["]	PN class	Mounting length [mm]	Sensor	Cable length, sensor [m]	Stock No.	Product No.
0.6	G ¾	PN 16	110	27.5 mm length	1.5	BPZ:UH50-A05C-EN06-F 0B-B000-M3A	**UH50-A05C-EN06-F 0B-B000-M3A**
1.5	G ¾	PN 16	110	27.5 mm length	1.5	BPZ:UH50-A21C-EN06-F 0B-B000-M3A	**UH50-A21C-EN06-F 0B-B000-M3A**
0.6	G 1	PN 16	190	27.5 mm length	1.5	BPZ:UH50-A07C-EN06-F 0B-B000-M3A	**UH50-A07C-EN06-F 0B-B000-M3A**
1.5	G 1	PN 16	190	27.5 mm length	1.5	BPZ:UH50-A23C-EN06-F 0B-B000-M3A	**UH50-A23C-EN06-F 0B-B000-M3A**
2.5	G 1	PN 16	130	27.5 mm length	1.5	BPZ:UH50-A36C-EN06-F 0B-B000-M3A	**UH50-A36C-EN06-F 0B-B000-M3A**
2.5	G 1	PN 16	190	27.5 mm length	1.5	BPZ:UH50-A38C-EN06-F 0B-B000-M3A	**UH50-A38C-EN06-F 0B-B000-M3A**
3.5	G 1¼	PN 16	260	27.5 mm length	1.5	BPZ:UH50-A45C-EN06-E 0B-B000-M3A	**UH50-A45C-EN06-E 0B-B000-M3A**
6	G 1¼	PN 16	260	27.5 mm length	1.5	BPZ:UH50-A50C-EN06-E 0B-B000-M2A	**UH50-A50C-EN06-E 0B-B000-M2A**
10	G 2	PN 16	300	100 mm length	2	BPZ:UH50-A60C-EN06-E 0M-B000-M2A	**UH50-A60C-EN06-E 0M-B000-M2A**

Description of standard version:
- Heat meter with two wire measurement for return installation
- Nominal flow rate from 0.6 to 60 m³/h
- Split version (electronic unit removable) with 1.5 m control line.
- Dial plate: English neutral
- Label: Siemens
- Sensor: Pt 500, replaceable pairwise , up to nominal flow rate 2.5 m³/h one sensor is integrated in the volume measurement unit.
- 6 year battery (D-cell).
- Without communication modules
- Without data logger
- Calibration/conformity: up to nominal flow rate 3.5 m³/h conform according MID class 3; from nominal flow rate 6 m³/h conform according MID class 2.
- Energy unit: LCD-display up to nominal flow rate 10 m³/h in „kWh"; from nominal flow rate 15 m³/h in „MWh".

Notice: Further versions can be arranged by your Siemens BT Regional Company.

Ultrasonic heat meters and heating/cooling energy meters
Standard types with connecting flange UH50..

Range overview with connecting flange

Nominal flow rate [m³/h]	DN	PN class	Mounting length [mm]	Sensor [mm]	Cable length, sensor [m]	Stock No.	Product No.
0.6	20	PN 25	190	27.5 mm length	1.5	BPZ:UH50-A08C-EN06-E 0B-B000-M3A	**UH50-A08C-EN06-E 0B-B000-M3A**
1.5	20	PN 25	190	27.5 mm length	1.5	BPZ:UH50-A24C-EN06-E 0B-B000-M3A	**UH50-A24C-EN06-E 0B-B000-M3A**
2.5	20	PN 25	190	27.5 mm length	1.5	BPZ:UH50-A39C-EN06-E 0B-B000-M3A	**UH50-A39C-EN06-E 0B-B000-M3A**
3.5	25	PN 25	260	27.5 mm length	1.5	BPZ:UH50-A46C-EN06-E 0B-B000-M3A	**UH50-A46C-EN06-E 0B-B000-M3A**
6	25	PN 25	260	27.5 mm length	1.5	BPZ:UH50-A52C-EN06-E 0B-B000-M2A	**UH50-A52C-EN06-E 0B-B000-M2A**
10	40	PN 25	300	100 mm length	2	BPZ:UH50-A61C-EN06-E 0M-B000-M2A	**UH50-A61C-EN06-E 0M-B000-M2A**
15	50	PN 25	270	100 mm length	2	BPZ:UH50-A65C-EN06-E 0M-B000-M2B	**UH50-A65C-EN06-E 0M-B000-M2B**
25	65	PN 25	300	100 mm length	2	BPZ:UH50-A70C-EN06-E 0M-B000-M2B	**UH50-A70C-EN06-E 0M-B000-M2B**
40	80	PN 25	300	150 mm length	2	BPZ:UH50-A74C-EN06-E 0P-B000-M2B	**UH50-A74C-EN06-E 0P-B000-M2B**
60	100	PN 16	360	150 mm length	2	BPZ:UH50-A82C-EN06-E 0P-B000-M2B	**UH50-A82C-EN06-E 0P-B000-M2B**
60	100	PN 25	360	150 mm length	2	BPZ:UH50-A83C-EN06-E 0P-B000-M2B	**UH50-A83C-EN06-E 0P-B000-M2B**

Description of standard version:
- Heat meter with two wire measurement for return installation
- Nominal flow rate from 0.6 to 60 m³/h
- Split version (electronic unit removable) with 1.5 m control line.
- Dial plate: English neutral
- Label: Siemens
- Sensor: Pt 500, replaceable pairwise , up to nominal flow rate 2.5 m³/h one sensor is integrated in the volume measurement unit.
- 6 year battery (D-cell).
- Without communication modules
- Without data logger
- Calibration/conformity: up to nominal flow rate 3.5 m³/h conform according MID class 3; from nominal flow rate 6 m³/h conform according MID class 2.
- Energy unit: LCD-display up to nominal flow rate 10 m³/h in „kWh"; from nominal flow rate 15 m³/h in „MWh".

Notice: Further versions can be arranged by your Siemens BT Regional Company.

PappaWin software 2WR9300-0AA11-0A

Software for readout, checking, parameter settings and calibration. For use with 2WR4, 2WR5 and 2WR6 and UH50.. heat meters.
The software facilitating:
- Online monitoring
- Online device diagnostics
- Graphic display of relevant values
- Choice of service functions
- Periodic data readout and storage

Checking customer plant on site:
PappaWin provides a graphic presentation of the following parameters:
- Current values of flow rate, power, flow and return temperature
- Maximum flow rate and maximum power over the past 60 months
- The last 60 monthly mean values of flow rate, power and temperature differential.

	Stock No.	Product No.
	BPZ:2WR9300-0AA11-0A	**2WR9300-0AA11-0A**

Reading head for optical interface

Product Title	Stock No.	Product No.
Optical reading head for PC with 9-pin plug	BPZ:9956467001	**9956467001**
Optical reading head for PC with USB- access	BPZ:WZR-OP-USB	**WZR-OP-USB**

Mounting accessories for volume measuring section

Product Title	Stock No.	Product No.
Mounting kit, pair of fittings G¾" × R½" with seals	S55563-F124	**WZM-E34**
Mounting kit, pair of fittings G1" × R¾" with seals	S55563-F123	**WZM-E1**
Mounting kit, pair of fittings G1¼" × R1" with seals	S55563-F125	**WZM-E54**
Mounting kit, pair of fittings G2" × R1½" with seals	BPZ:WZM-E2	**WZM-E2**
Spacer for heat meter G1" – 190 mm, incl. flat seals	BPZ:WZM-V190	**WZM-V190**
Extension from 110 mm G¾" to 130 mm G1", pair with seals	BPZ:WZM-V130.1	**WZM-V130.1**
Extension from 110 mm G¾" to 130 mm G¾", pair with seals	BPZ:WZM-V130	**WZM-V130**
Spacer for heat meter G¾" – 110 mm, incl. flat seals	BPZ:WZM-G110	**WZM-G110**
Spacer for heat meter G1" – 190 mm, incl. flat seals	BPZ:WZM-G190	**WZM-G190**
Spacer for heat meter G1¼" – 260 mm, incl. flat seals	BPZ:WZM-G260	**WZM-G260**
Spacer for heat meter G2" – 300 mm, incl. flat seals	BPZ:WZM-G300	**WZM-G300**
Spacer for heat meter DN20 – 190 mm, incl. flat seals	BPZ:WZM-F190	**WZM-F190**
Spacer for heat meter DN25 – 260 mm, incl. flat seals	BPZ:WZM-F260	**WZM-F260**
Spacer for heat meter DN50 – 270 mm, incl. flat seals	BPZ:WZM-F270	**WZM-F270**
Spacer for heat meter DN65 – 300 mm, incl. flat seals	BPZ:WZM-F300.65	**WZM-F300.65**
Spacer for heat meter DN80 – 300 mm, incl. flat seals	BPZ:WZM-F300.80	**WZM-F300.80**
Spacer for heat meter DN100 – 360 mm, incl. flat seals	BPZ:WZM-F360.100	**WZM-F360.100**

Mounting accessories for temperature sensors

Product Title	Stock No.	Product No.
Adapter for temperature sensor DS M10 × 1 × G½"B with seal	S55563-F116	**WZT-A12**
Adapter for temperature sensor DS M10 × 1 × G¾"B with seal	BPZ:WZT-A34	**WZT-A34**
Protection pocket G½"B, brass, 5.2 × 35 mm	S55563-F103	**WZT-M35**
Pocket G½"B, stainless steel, 5.2 × 37 mm, with seal	BPZ:WZT-S43V	**WZT-S43V**
Protection pocket G½"B, brass, 5.2 × 50 mm	BPZ:WZT-M50	**WZT-M50**
Protection pocket G½"B, immersion length 100 mm, stainless steel, with seal	S55563-F117	**WZT-S100**
Protection pocket G½"B, immersion length 150 mm, stainless steel, with seal	S55563-F118	**WZT-S150**
Welding sleeve G ½" × 45° to the pipe's axis	S55563-F122	**WZT-G12**
Threaded welding sleeve G ½" × 90° to the pipe's axis	BPZ:WZT-GLG	**WZT-GLG**
Threaded welding sleeve M10 × 1 for DS temperature sensor	S55563-F121	**WZT-G10**
Ball valve Rp½" for sensors DS M10 × 1, 28 mm long	S55563-F104	**WZT-K12**
Ball valve Rp¾" for sensors DS M10 × 1, 28 mm long	S55563-F120	**WZT-K34**
Ball valve Rp1" for sensors DS M10 × 1, 28 mm long	S55563-F119	**WZT-K1**

Communication modules

For technical description see UH50 versions, chapter communication modules.

Product Title	Stock No.	Product No.
CL module Digital passive interface (current loop) standard to EN 1434-3	BPZ:WZU-CL	**WZU-CL**
Parameter settings with PappaWin	S55563-F107	**WZU-P2**
Radio module with integrated antenna On request	BPZ:WZU-RM	**WZU-RM**
Radio module with external antenna On request	BPZ:WZU-RM-EXT	**WZU-RM-EXT**
Analog module On request	BPZ:WZU-AM	**WZU-AM**
M-Bus module To EN 1434-3, with guaranteed data frame	BPZ:WZU-MB-GR	**WZU-MB-GR**

10

Pair of temperature sensors

Other lengths on request

Product Title	Stock No.	Product No.
Pair of temperature sensors Pt500, length 27.5 mm, DS M10 × 1, cable length 1.5 m	BPZ:WZU-2815	**WZU5-2815**
Pair of temperature sensors Pt500, length 27.5 mm, DS M10 × 1, cable length 2.5 m	BPZ:WZU-2825	**WZU5-2825**
Pair of temperature sensors Pt500, length 100 mm × Ø 6 mm, cable length 2 m	BPZ:WZU5-1020	**WZU5-1020**
Pair of temperature sensors Pt500, length 100 mm × Ø 6 mm, cable length 5 m	BPZ:WZU5-1050	**WZU5-1050**
Pair of temperature sensors Pt100, length 100 mm × Ø 6 mm, cable length 2 m	BPZ:WZU1-1020	**WZU1-1020**
Pair of temperature sensors Pt100, length 150 mm × Ø 6 mm, cable length 2 m	BPZ:WZU1-1520	**WZU1-1520**

Power supply 2WR5

Product Title	Stock No.	Product No.
Battery	S55563-F113	**WZU-BDS**
Suited for special M-bus readout or for fast temperature measurements. Battery life is 6 years		
	S55563-F111	**WZU-AC230-15**
Mains module AC 110 V, cable 1.5 m	BPZ:WZU-AC110-15	**WZU-AC110-15**
	S55563-F112	**WZU-ACDC24-00**

Systems for remote readout
Automatic Meter Reading System (AMR 868 MHz)

AMR

AMR wireless system 868 MHz

The Automatic Meter Reading system (AMR) is an innovative system for wireless remote readout of consumption data. It consists of network nodes (data collectors) which form a network within the premises to collect all consumption data transmitted by the metering devices, to store them and to make them available for further handling. The network nodes can be read either locally or by making use of Internet technologies, also from the office. The types of consumption meters included in the AMR system are heat meters, water meters and heat cost allocators. A pulse adapter is available, enabling third-party meters to be integrated into the system.The AMR system excels in versatility, ease of installation and maintenance, and offers a large number of readout choices matched to customer needs. The system components are suited for installation in small premises (e.g. 3 apartments) and in large plant comprising several buildings. Installation of the wireless network is largely automatic, including self-configuration.
Functioning principle:The system automatically configures itself during installation, forming a network. The battery-powered network nodes receive and store the consumption data from the metering devices installed within their range. In the network, the measured values received from all metering devices are constantly updated. This means that every network node holds the consumption data of the entire plant so that readout can take place at any of the nodes. For local readout, a laptop can be connected to any of the network nodes via cable, or an optional wireless module can be used. This works within the range of each network node. Depending on the local situation, it may not even be necessary to enter the house for making the readout. If AMR plant shall be read out from a remote location, one of the network nodes is to be used with a gateway. This gateway then offers a number of communication choices: Data can be transmitted directly to the billing systems via GSM network, broadband cable network or computer network. The user can choose the transmission medium he prefers.

Data sheet N2870

	Stock No.	Product No.
	JXF:AMR	**AMR**

AMR 868 MHz main components

Product Title	Data sheet	Stock No.	Product No.
Electronic heat cost allocators with AMR radio interface	N2886	JXF:WHE56..	**WHE56..**
Electronic heat meter, wall mounted	N5333	JXF:WFM2..	**WFM2..**
Electronic heat and cooling energy meter, wall mounted	N5338	JXF:WFN2..	**WFN2..**

Overview radio adapter AMR

Product Title	Data sheet	Stock No.	Product No.
Radio adapter AMR Modularis Radio adapter for mechanical Modularis water meters (WFx30, WMx10). Adapter acquires and process the metering pulses of the radio-ready mechanical water meters WFx30../WMx10.. and transmits the data to the AMR system.		S55563-F100	**WFZ16.MO**

Accessories for WFZ16.MO

Product Title	Data sheet	Stock No.	Product No.
Torque Screwdriver, Torx Plus™ recommended for radio adapter Modularis WFZ16x.MO		JXF:FZ201-009	**FZ201-009**

NEW PRODUCT

AMR pulse adapter **AEW36.2**

The pulse adapter is used for acquiring and storing the pulses received from consumption meters with pulse output. It is possible to acquire pulses from heat, gas and water meters.

Other types of meters on request.

Data sheet N2873

	Stock No.	Product No.
	S55563-F129	**AEW36.2**

Network nodes **WTT16..**

The nodes receive and handle the data from the consumption meters of the AMR system. During installation, all nodes automatically create a radio-based network within the building, where all information and consumption values are exchanged at regular intervals via a 868 MHz link. This ensures that all data required for consumption-related readout are available at any of the nodes in the network for local readout. Local readout can be wireless or wire-bound (RS-232 or via M-bus). If the network nodes shall be read from a remote location, the AMR gateway can be used as an interface to different communication media. The gateway facilitates remote readout via a fixed telephone network, GSM or - using the optional Ethernet interface - via broad-band cable or computer networks.
For completely wireless installation of the node networks, the battery-powered types WTT16... are available. A mains-powered version WTX16... is available for special applications.

Data sheet N2874

	Stock No.	Product No.
	BPZ:WTT16..	**WTT16..**

Range overview: Network nodes with interface for local readout

Product Title	Data sheet	Stock No.	Product No.
Battery-powered network node Local, wireless readout (WTZ.RM) or via M-bus (WFZ.MBM or WHZ3.USB)	N2874	S55563-F126	**WTT16**
Battery-powered network node With RS-232 moduleLocal readout via RS-232 (WTZ.K232) or M-bus (WFZ.MBM or WHZ3.USB	N2874	S55563-F127	**WTT16.232**

Range overview: Network nodes with interface for remote readout

Product Title	Data sheet	Stock No.	Product No.
Network node and power supply with communication module gateway GSM for max. 500 metering devices, no connection to other networks possible	N2878	S55563-F128	**WTX16.MOD-1**

WTZ.RM

PC radio module

with program CD, USB cable and measuring device

Data sheet N2876

	Stock No.	Product No.
	BPZ:WTZ.RM	**WTZ.RM**

Programming adapter and tools for WTT../ WTX..

Product Title	Stock No.	Product No.
USB tool set	BPZ:WHZ3.USB	**WHZ3.USB**
PC connecting cable	BPZ:WFZ.MBM	**WFZ.MBM**
RS-232 cable	BPZ:WTZ.K232	**WTZ.K232**
Special Port Converter RS232 to USB	JXF:WFZ.USB-1	**WFZ.USB-1**

Software for WTT../ WTX..

Product Title	Stock No.	Product No.
Parameterizing and diagnostics software	BPZ:ACT20	**ACT20**
Parameterization software	BPZ:ACT21	**ACT21**
Readout software	BPZ:ACS26	**ACS26**
Setup and service software	BPZ:ACT26	**ACT26**

Batteries

Product Title	Operating voltage [V]	Battery capacity [Ah]	Stock No.	Product No.
Battery for WTT16..	3.6	13	BPZ:WTZ.BAT	**WTZ.BAT**
Backup battery for WT..16..	3	1	BPZ:FBCRAA/KS	**FBCRAA/KS**

walk-by radio system 868 MHz

walk-by

Simple, fast and reliable. These three attributes are the most apt descriptions of the walk-by system. After all, it provides values for billing consumption easily, quickly and dependably. And the meter-reader does not even have to enter the tenant's flat - on the reading date, he only has to enter the commonly accessible area of the property.
For smaller properties, he can even collect data outside of the building. That not only benefits the meter-reader (who does not have to plan and mount data collectors any more), but also tenants. They no longer have to agree on a date for reading or even be there on the readout day. It couldn't be simpler. At the set reading time, the meters send current
consumption data at short intervals. The meter-reader only has to enter the building or even just walk around it with his mobile meter-reading system. This consists of a mobile data collector
and a laptop with application software. The data collector collects the radio telegrams and, after a plausibility check, sends them wirelessly to the laptop via the Bluetooth interface. The software on the laptop not only manages the data, it also shows the meter-reader the current progress of the process. After having received all data, the meter-reader can then leave the property. Back at his workplace, the meter-reader only has to export the data saved and read them for example into a billing program. If data is needed on a regular basis – meaning permanently mounted data collectors are to be retrofitted with an interface for remote data transmission – the measuring devices can be reprogrammed from the walk-by system to the stationary AMR system from Siemens at any time. This means that readout values can be called up on a daily basis without entering the property.

Within the walk-by system there are walk-by heat cost allocators and walk-by radio adpaters available. More devices on request.

Data sheet

	Stock No.	Product No.
	JXF:walk-by	**walk-by**

Overview heat cost allocators walk-by

Product Title	Data sheet	Stock No.	Product No.
Electronic heat cost allocators with walk-by radio interface	N2886	JXF:WHE55..	**WHE55..**

Overview radio adapter walk-by

Product Title	Data sheet	Stock No.	Product No.
Radio adapter walk-by Modularis Radio adapter for mechanical Modularis water meters (WFx30, WMx10). Adapter acquires and process the metering pulses of the radio-ready mechanical water meters WFx30../WMx10.. and transmits the data to the walk-by system.		S55563-F101	**WFZ166.MO**

Tools walk-by

Product Title	Stock No.	Product No.
Torque Screwdriver, Torx Plus™ recommended for radio adapter Modularis WFZ16x.MO	JXF:FZ201-009	**FZ201-009**
readout-set walk-by Bluetooth-Stick, Software ACT46, mobil data collector with bag	JXF:WTZ.WBSET-2/PC	**WTZ.WBSET-2/PC**

NEW PRODUCT

OZW10

M-bus central unit

The M-bus central unit is used for remote readout, remote operation and supervision of M-bus plant with consumption meters and controllers with M-bus connection facility to EN 1434/3.

The M-bus central unit:
- controls and monitors up to 700 devices
- identifies connected M-bus devices with automatic search run
- acquires and stores the consumption data of the M-bus devices periodically
- shows the stored consumption values on the display
- copies the stored consumption values to a billing file of the memory card at the press of a button
- facilitates access
  - to the stored consumption data
  - to the memory card
  - directly to the M-bus devices by means of a PC (with V3.0 or higher) connected either directly or via modem
- monitors periodically the M-bus devices and 4 potential-free digital inputs
- delivers alarms
  - to the display
  - via alarm relay
  - to a PC (with V3.0 or higher) either directly or via modem

The use of an M-bus central unit OZW10 always necessitates a WZC-P... signal converter.

Data sheet	N5362
Operating voltage	AC 24 V
Power consumption	8 VA
Frequency	50/60 Hz

	Stock No.	Product No.
	BPZ:OZW10	**OZW10**

Operating set for OZW10

Operating set for M-bus central unit OZW10 consisting of one set of operating cards and operating manual.

Product Title	Data sheet	Stock No.	Product No.
Operating set in German	N5362	BPZ:ARG10.DE	**ARG10.DE**
Operating set in English	N5362	BPZ:ARG10.GB	**ARG10.GB**
Operating set in Danish	N5362	BPZ:ARG10.DA	**ARG10.DA**

Memory cards for OZW10

Product Title	Data sheet	Stock No.	Product No.
Memory card 128 KB for OCI600 / OZW10 / OZW30	N2529	BPZ:ALC30.128	**ALC30.128**
Memory card 512 KB for OCI600 / OZW10 / OZW30	N2529	BPZ:ALC30.512	**ALC30.512**

M-bus central unit

OZW111

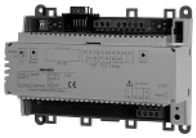

The M-bus central unit is used for the remote readout, remote operation and supervision of an M-bus plant with a maximum of 5 consumption meters or controllers featuring an M-bus connection facility to EN 1434-3.

The M-bus central unit:
- identifies connected M-bus devices with the automatic search run
- facilitates direct access to the M-bus devices by means of a PC connected either directly or via modem
- monitors periodically the M-bus devices and 2 potential-free digital inputs
- delivers alarms to a PC, either directly or via modem
- provides a clock function for alarms

The M-bus central unit OZW111 requires no M-bus signal converter WZC-P...

Data sheet	N5363
Operating voltage	AC 230 V
Frequency	50/60 Hz
Power consumption	5 VA

	Stock No.	Product No.
	BPZ:OZW111	**OZW111**

Accessory for OZW111

Product Title	Stock No.	Product No.
Terminal covers	BPZ:7411100280	**7411100280**

Refer to the central unit data sheet for details

Combinable field devices for M-Bus

Product Title	Data sheet	Stock No.	Product No.
Electronic heat meter, wall mounted	N5333	JXF:WFM2..	**WFM2..**
Electronic heat and cooling energy meter, wall mounted	N5338	JXF:WFN2..	**WFN2..**

System components

Product Title	Data sheet	Stock No.	Product No.
M-bus pulse adapter	N5383	BPZ:AEW310.2	**AEW310.2**
M-bus central unit	N5362	BPZ:OZW10	**OZW10**
M-bus central unit	N5363	BPZ:OZW111	**OZW111**
M-Bus signal converter		BPZ:WZC-P..	**WZC-P..**
M-Bus repeater	N5366	BPZ:WZC-R250	**WZC-R250**

Software and tools

Product Title	Data sheet	Stock No.	Product No.
Commissioning and plant operating software	N5649	S55800-Y100	**ACS790**
Parameterizing and diagnostics software		BPZ:ACT20	**ACT20**
PC connecting cable		BPZ:WFZ.MBM	**WFZ.MBM**
USB tool set		BPZ:WHZ3.USB	**WHZ3.USB**

M-Bus metering system
For remote control via M-Bus: OZW1.. / WZC.. / AEW3..

WZC-P60

M-Bus signal converter for max 60 devices

Comes with RS-485, RS-232 and optical interface.
The WZC-P60 is an M-bus driver which supplies the bus quiescent current to the connected M-bus devices and which converts the M-bus signal levels to RS-485 or RS-232 levels.
A maximum of 60 M-bus terminal units can be connected to the WZC-P60.
The WZC-P60 is for connection via the RS-485 port to be used as a signal converter between an M-bus segment and the OZW10 central unit, or via the RS-232 port for connection of an M-bus network to BPS or PX automation stations.

Data sheet	N5382
Operating voltage	DC 20...45 V
Power consumption	16 VA

Stock No.	Product No.
BPZ:WZC-P60	**WZC-P60**

WZC-P250

M-Bus signal converter for max 250 devices

The WZC-P250 signal converter is an M-bus driver which supplies the bus quiescent current to the connected M-Bus devices and which converts the M-bus signal levels to RS-485 signal level.
The WZC-P250 is used with an RS-485 interface card as a signal converter between an M-bus segment and the OZW10 central unit.
The signal converter is a component of the M-bus system. It must always be used together with the OZW10 M-bus central unit.

Data sheet	N5365
Operating voltage	AC 42 V
Power consumption	25 VA

Stock No.	Product No.
BPZ:WZC-P250	**WZC-P250**

WZC-R250

M-Bus repeater

The M-bus repeater is a component of the M-bus system. It is designed for use in plants where extensive bus lines are required, or where large numbers of meters need to be connected, for example in district heat networks that supply heat to entire sections of towns.

Data sheet	N5366
Operating voltage	DC 42 V
Power consumption	25 VA

Stock No.	Product No.
BPZ:WZC-R250	**WZC-R250**

M-Bus signal converter — WZC-S250

- Conversion from RS-232 to M-bus
- Connection of an M-bus network with a maximum of 250 users to a BPS substation
- Conversion of M-bus signal level to RS-232 and supply of required quiescent current to the M-bus devices

Data sheet	N5364
Operating voltage	AC 230 V
Power consumption	25 VA

Stock No.	Product No.
BPZ:WZC-S250	**WZC-S250**

M-bus pulse adapter — AEW310.2

Module for acquiring and storing the pulses received from consumption meters with pulse output. It can handle pulses from heat, gas, hot water, chilled water, electricity or hours run meters.

Features:
- Operation without power pack
- Supervision of the meter's connection (Namur circuitry)
- Connections: 2 meters with pulse output (Reed contact, Namur circuitry)

Data sheet	N5383
Dimensions (W x H x D)	80 x 80 x 28 mm

Stock No.	Product No.
BPZ:AEW310.2	**AEW310.2**

Parameterizing and diagnostics software — ACT20

- for water meters WFK3../WFW3.. with additional communication modul
- for heat meters WFM2../WFM4..
- for heat / cooling energy meters WFN2..
- for pulse adapters AEW3..

Stock No.	Product No.
BPZ:ACT20	**ACT20**

USB tool set — WHZ3.USB

Programming cable set for programming:
- water meters WFK3../WFW3.. with additional communication modul
- heat meters WFM2../WFM4..
- heat/cooling energy meters WFN2..
- pulse adapters AEW3..
- network nodes WT..

Stock No.	Product No.
BPZ:WHZ3.USB	**WHZ3.USB**

WFZ.MBM

PC connecting cable

For connecting to the PC:
- network nodes WT..
- heat meters WFM2../WFM4..
- heat/cooling energy meters WFN2..
- pulse adapters AEW3..

PC requires a COM and a PS/2 port

	Stock No.	Product No.
	BPZ:WFZ.MBM	**WFZ.MBM**

10

SYNERGYR control & metering system

Synergyr Control..

The system offers a very high level of convenience for the enduser while affording central readout of consumption data. The system acquires heating costs and, at the same time, provides heating control with a single device, the combined heating cost allocation and control valve WRV.. These central components have 3 different operating levels: The Standard system, which is used exclusively for the precise acquisition of consumption costs, the Eco variant with convenient reference room control, and the Comfort variant. This system variant is especially suited for individual room control in connection with floor heating systems.

Central unit

OZW30

Central mains-powered data acquisition and control unit.
The central unit collects the billing data from the apartments, produces an image of the heat consumption of each apartment and makes it available for readout.
- Has an influence on room temperature control in the apartments
- Has an influence on heat generation, depending on the demand for heat from the apartments
- Acquires messages about operating states, actual values and faults

Functions:
- Central readout and storage of all consumption data from the individual apartments
- Display and logging of faults
- Straightforward readout with the help of the memory card

Interfaces:
- Building bus interface, for data exchange between the SYNERGYR® components
- LPB interface, for communication with heating controllers RVL4..
- RS-232 port, for communication with external partners

Data sheet	N2841
Operating voltage	AC 24 V
Power consumption	10 VA

	Stock No.	Product No.
	BPZ:OZW30	**OZW30**

Operating sets ARG30... for the central unit

Consisting of one set of operating cards and one operating manual.

Product Title	Data sheet	Stock No.	Product No.
Operating set in German	N2841	BPZ:ARG30.DE	**ARG30.DE**
Operating set in English	N2841	BPZ:ARG30.GB	**ARG30.GB**
Operating set in French	N2841	BPZ:ARG30.FR	**ARG30.FR**
Operating set in Dutch	N2841	BPZ:ARG30.NL	**ARG30.NL**
Operating set in Italian	N2841	BPZ:ARG30.IT	**ARG30.IT**
Operating set in Swedish	N2841	BPZ:ARG30.SV	**ARG30.SV**
Operating set in Danish	N2841	BPZ:ARG30.DA	**ARG30.DA**

QAW10

Analog room unit

Analog room unit for operating the control and heat cost allocation valve WRV8... Room temperature acquisition, direct setpoint readjustment by +/- 3 °C with knob on the unit, Economy button for setpoint changeover between Comfort and Reduced mode, 2-wire connection, color is pure-white RAL 9010.

Data sheet N2811

Stock No.	Product No.
BPZ:QAW10	**QAW10**

QAW20

Digital room unit with setpoint adjuster

Programmable room unit for operating the control and heat cost allocation valve WRV8... Room temperature acquisition, 7-day heating program, adjustable temperature setpoints, direct setpoint readjustment, economy button for setpoint changeover between comfort and reduced temperature, detection of airing, holiday programming, permanent memory for individually programmed values, time of day with 12 h backup. Operating mode selector and info button, 2-wire connection, color pure-white RAL 9010.
Connection facility for additional remote temperature sensor QAW44 or remote telephone switch for setpoint changeover.

LCD with the following displays:
- Temperatures and heating program
- Weekday and time of day
- Current meter readings
- Meter readings on the set day
- Heat consumption trend
- Current outside temperature

Data sheet N2812

Stock No.	Product No.
BPZ:QAW20	**QAW20**

QAW44

Remote room temperature sensor

For weighted averaging of the room temperature with the digital room unit QAW20 (SYNERGYR) and QAW70 (SIGMAGYR).

Data sheet

Stock No.	Product No.
BPZ:QAW44	**QAW44**

Control and heat meter interface

WRI80

Electronic control and heat meter interface. Controls the room temperature through control of a valve, reads heat energy consumption from the connected M-bus heat meter, acquires pulses from third-party devices, stores data and communicates with other SYNERGYR devices via the building bus.

- Controls the room temperature of the reference room in connection with the QAW... room unit through control of a zone and / or room valve
- Central night setback
- Boost heating and quick setback
- Minimum and maximum limitation of the volumetric flow
- Release of zone valve for DHW charging
- Control of an apartment pump
- Frost protection for the apartment
- Periodic pump and valve kick
- Reads the consumption data and measured values from the connected M-bus heat meters
- Acquires pulses from third-party meters
- Stores the meter readings on the set days and at the end of the months
- Hours run counter
- Transmits all relevant data to the central unit
- Indication of operating state via LED

Data sheet	N2827
Operating voltage	AC 24 V
Frequency	50/60 Hz
Power consumption	2.4 VA
Degree of protection	IP54

Stock No.	Product No.
BPZ:WRI80	**WRI80**

Conduit box for WRV84..

ALW84

For direct connection of the WRV84../WRV85.. to the building bus, control module AEK84 and field devices. Designed for mounting in control cabinets, on the wall, or on DIN rails.
Components:
- Base, terminal block, sealable cover
- 5 connection terminals each for maximum 4 wires (1.5 mm²)
- 3 connection terminals each for maximum 2 wires (1.5 mm²)

Data sheet	N2824
Dimensions (W x H x D)	136 x 96 x 42 mm

Stock No.	Product No.
BPZ:ALW84	**ALW84**

Pulse adapter

AEW2.1

Acquires and stores the pulses from 2 additional meters with pulse output (Reed contact with or without Namur circuitry), e.g. for hot water, cold water or gas meters, monitors the connections to them, delivers the cumulated consumption values, error messages, etc., to the building bus. Designed for mounting in control cabinets, on the wall, or on DIN rails.

Data sheet	N2831
Operating voltage	AC 24 V
Dimensions (W x H x D)	136 x 96 x 42 mm
Power consumption	1.2 VA

Stock No.	Product No.
BPZ:AEW2.1	**AEW2.1**

AEK84

Control module for WRV84..

Electronic control unit for the control of a thermal
actuator by means of the low-voltage control signal delivered by the WRV84... Designed for mounting in control cabinets, on the wall, or on DIN rails.

Data sheet N2833

Dimensions (W x H x D) 136 x 96 x 42 mm

Stock No.	Product No.
BPZ:AEK84	**AEK84**

QAB30

Bus-compatible temperature measuring unit

Facilitates connection of a QAC22 outside sensor to the building bus for the display of the outside temperature on the QAW20 digital room unit.

Designed for wall mounting or an DIN rails.

Data sheet N2851

Dimensions (W x H x D) 136 x 96 x 42 mm

Stock No.	Product No.
BPZ:QAB30	**QAB30**

Field devices for Synergyr

Product Title	Data sheet	Stock No.	Product No.
Outside sensor LG-Ni1000	N1811	BPZ:QAC22	**QAC22**
Electromechanical room thermostats	N3000	BPZ:RAA..	**RAA..**
Electrothermal actuator, AC/DC 24 V, NC, 2P, PDM, 1 m	N4884	S55174-A100	**STA73**

ALG80WRI

Mounting kit for WRV81/84 replacement

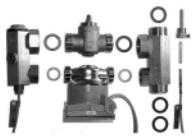

Using the ALG80WRI, heat meter and small valve (complete with actuator) can be installed in very confined spaces, analogous to the WRV mounting dimensions.
The ALG80WRI consists of 2 hydraulic diversion pieces with fittings, a built-in immersion sleeve and the necessary sealings.

Data sheet N2803

Stock No.	Product No.
BPZ:ALG80WRI	**ALG80WRI**

Mounting kit for WRV83 replacement

ALG83WRI

Using the ALG83WRI, a WRV83 valve can be hydraulically replaced by a heat meter without having to modify the existing piping.
The ALG83WRI consists of 2 threaded adapters (from ¾" to 1"), an immersion sleeve and the necessary sealings.

Data sheet N2803

	Stock No.	Product No.
	BPZ:ALG83WRI	**ALG83WRI**

Protection pockets

Product Title	Data sheet	Stock No.	Product No.
Protection pockets and accessories	N1194	BPZ:ALT..	**ALT..**
Protection pocket 35 mm, R ⅜", for nominal pipe size DN20...DN40	N2821	BPZ:ALT35	**ALT35**
Protection pocket 65 mm, R ⅜", for nominal pipe size DN50...DN80	N2851	BPZ:ALT65	**ALT65**

Address plugs

Product Title	Data sheet	Stock No.	Product No.
Addresses 1...16	N8105	BPZ:PTG1.16	**PTG1.16**
Addresses 1...32	N8105	BPZ:PTG1.32	**PTG1.32**
Addresses 33...64	N8105	BPZ:PTG1.64	**PTG1.64**
Addresses 65...96	N8105	BPZ:PTG1.96	**PTG1.96**
Addresses 97...128	N8105	BPZ:PTG1.128	**PTG1.128**

Siemens Switzerland Ltd
Infrastructure & Cities Sector
Building Technologies Division
International Headquarters
Gubelstrasse 22
6301 Zug
Switzerland
Tel +41 41 724 24 24

The information in this document contains general descriptions of technical options available, which do not always have to be present in individual cases. The required features should therefore be specified in each individual case at the time of closing the contract.

© Siemens Switzerland Ltd, 2012

Answers for infrastructure.
Our world is undergoing changes that force us to think in new ways: demographic change, urbanization, global warming and resource shortages. Maximum efficiency has top priority – and not only where energy is concerned. In addition, we need to increase comfort for the well-being of users. Also, our need for safety and security is constantly growing. For our customers, success is defined by how well they manage these challenges. Siemens has the answers.

"We are the preferred partner for energy-efficient, safe and secure buildings and infrastructure."

www.siemens.com/buildingtechnologies-productcatalog